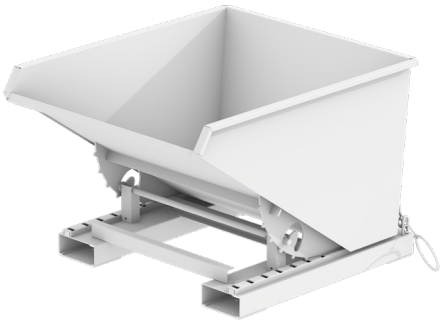

PRICE LIST 0726 EN-BG

FORKLIFT TRUCK ATTACHMENTS

WORKSPACE MATERIAL HANDLING

ENVIRONMENT / STORAGE

HAZARDOUS MATERIALS CONTAINERS

INNOVATION – CONSTRUCTION – PRODUCTION

. . . since 1966

Price List 0726 en-BG
Forklift Truck Attachments

Drum Gripper Type 3P	Category	Price	Freight charges	Price including freight charges
3P, painted	B	942,–	138,–	1080,–
3P, hot-dip galvanized	B	990,–	138,–	1128,–

Tilting Container Type 3S	Category	Price	Freight charges	Price including freight charges
3S 300, painted	A	1244,–	226,–	1470,–
Lid, galvanized	A	174,–	18,–	192,–
Castor Set, polyamide, Load capacity 1050 kg / castor set	A	136,–	15,–	151,–
3S 300, hot-dip galvanized	A	1342,–	331,–	1673,–
Lid, galvanized	A	174,–	18,–	192,–
Castor Set, polyamide, Load capacity 1050 kg / castor set	A	136,–	15,–	151,–
3S 600, painted	A	1300,–	331,–	1631,–
Lid, galvanized	A	196,–	22,–	218,–
Castor Set, polyamide, Load capacity 1050 kg / castor set	A	136,–	15,–	151,–
3S 600, hot-dip galvanized	A	1402,–	331,–	1733,–
Lid, galvanized	A	196,–	22,–	218,–
Castor Set, polyamide, Load capacity 1050 kg / castor set	A	136,–	15,–	151,–

Automatic Tilting Container Type 4A	Category	Price	Freight charges	Price including freight charges
4A 600, painted	A	1103,–	226,–	1329,–
Lid, galvanized	A	196,–	22,–	218,–
Skip Body Welded Oil and Watertight	A	78,–	0,–	78,–
4A 600, hot-dip galvanized	A	1250,–	226,–	1476,–
Lid, galvanized	A	196,–	22,–	218,–
Skip Body Welded Oil and Watertight	A	78,–	0,–	78,–
4A 900, painted	A	1239,–	331,–	1570,–
Lid, galvanized	A	223,–	27,–	250,–
Skip Body Welded Oil and Watertight	A	78,–	0,–	78,–
4A 900, hot-dip galvanized	A	1424,–	331,–	1755,–
Lid, galvanized	A	223,–	27,–	250,–
Skip Body Welded Oil and Watertight	A	78,–	0,–	78,–
4A 1200, painted	A	1327,–	331,–	1658,–
Lid, galvanized	A	223,–	26,–	249,–
Skip Body Welded Oil and Watertight	A	121,–	0,–	121,–
4A 1200, hot-dip galvanized	A	1558,–	331,–	1889,–
Lid, galvanized	A	223,–	26,–	249,–
Skip Body Welded Oil and Watertight	A	121,–	0,–	121,–

Drum Gripper Type 4P	Category	Price	Freight charges	Price including freight charges
4P, painted	B	578,–	118,–	696,–
4P, hot-dip galvanized	B	551,–	118,–	669,–

Prices in EUR, valid EXW DE-46354 Südlohn, DE-38820 Halberstadt, unpacked
Freight charges valid CPT Bulgaria, islands and oversea territories excluded

BAUER GmbH
Eichendorffstr. 62
46354 Südlohn, Germany

Tel. +49 2862 70 90
info@bauer-suedlohn.com
www.bauer-suedlohn.com

Geschäftsführer
Patrick Bauer, Pascal Bauer
Amtsgericht Coesfeld HRB 5259

TÜVNORD
TÜV NORD CERT GmbH
DIN EN ISO 9001
tuev-nord.de

Price List 0726 en-BG
Forklift Truck Attachments

Drum Gripper Type 4P-D	Category	Price	Freight charges	Price including freight charges
4P-D120, painted	B	578,–	118,–	696,–
4P-D120, hot-dip galvanized	B	551,–	118,–	669,–
4P-D220, painted	B	578,–	118,–	696,–
4P-D220, hot-dip galvanized	B	551,–	118,–	669,–

Tilting Container Type AK	Category	Price	Freight charges	Price including freight charges
AK 50, painted	A	802,–	226,–	1028,–
Lid, galvanized	A	140,–	16,–	156,–
Castor Set, polyamide, Load capacity 1050 kg / castor set	A	136,–	15,–	151,–
Skip Body Welded Oil and Watertight	A	78,–	0,–	78,–
AK 50, hot-dip galvanized	A	956,–	226,–	1182,–
Lid, galvanized	A	140,–	16,–	156,–
Castor Set, polyamide, Load capacity 1050 kg / castor set	A	136,–	15,–	151,–
Skip Body Welded Oil and Watertight	A	78,–	0,–	78,–
AK 75, painted	A	897,–	226,–	1123,–
Lid, galvanized	A	192,–	21,–	213,–
Castor Set, polyamide, Load capacity 1050 kg / castor set	A	136,–	15,–	151,–
Skip Body Welded Oil and Watertight	A	78,–	0,–	78,–
AK 75, hot-dip galvanized	A	1048,–	331,–	1379,–
Lid, galvanized	A	192,–	21,–	213,–
Castor Set, polyamide, Load capacity 1050 kg / castor set	A	136,–	15,–	151,–
Skip Body Welded Oil and Watertight	A	78,–	0,–	78,–
AK 100, painted	A	970,–	331,–	1301,–
Lid, galvanized	A	218,–	26,–	244,–
Castor Set, polyamide, Load capacity 1050 kg / castor set	A	136,–	15,–	151,–
Skip Body Welded Oil and Watertight	A	121,–	0,–	121,–
AK 100, hot-dip galvanized	A	1133,–	331,–	1464,–
Lid, galvanized	A	218,–	26,–	244,–
Castor Set, polyamide, Load capacity 1050 kg / castor set	A	136,–	15,–	151,–
Skip Body Welded Oil and Watertight	A	121,–	0,–	121,–
AK 150, painted	A	1238,–	331,–	1569,–
Lid, galvanized	A	305,–	28,–	333,–
Castor Set, polyamide, Load capacity 1050 kg / castor set	A	136,–	15,–	151,–
Skip Body Welded Oil and Watertight	A	121,–	0,–	121,–
AK 150, hot-dip galvanized	A	1448,–	331,–	1779,–
Lid, galvanized	A	305,–	28,–	333,–
Castor Set, polyamide, Load capacity 1050 kg / castor set	A	136,–	15,–	151,–
Skip Body Welded Oil and Watertight	A	121,–	0,–	121,–

Container for Building Materials Type BBG	Category	Price	Freight charges	Price including freight charges
BBG 100, painted	A	405,–	226,–	631,–
Lid, galvanized	A	189,–	138,–	327,–
BBG 100, hot-dip galvanized	A	496,–	226,–	722,–
Lid, galvanized	A	189,–	138,–	327,–

Prices in EUR, valid EXW DE-46354 Südlohn, DE-38820 Halberstadt, unpacked
Freight charges valid CPT Bulgaria, islands and oversea territories excluded

BAUER GmbH
Eichendorffstr. 62
46354 Südlohn, Germany

Tel. +49 2862 70 90
info@bauer-suedlohn.com
www.bauer-suedlohn.com

Geschäftsführer
Patrick Bauer, Pascal Bauer
Amtsgericht Coesfeld HRB 5259

TÜVNORD
TÜV NORD CERT GmbH
DIN EN ISO 9001
tuev-nord.de

Price List 0726 en-BG
Forklift Truck Attachments

Container for Building Materials Type BBK	Category	Price	Freight charges	Price including freight charges
BBK 100, painted	A	496,–	226,–	722,–
Lid, galvanized	A	189,–	138,–	327,–
BBK 100, hot-dip galvanized	A	571,–	226,–	797,–
Lid, galvanized	A	189,–	138,–	327,–

Material Container Type BBM	Category	Price	Freight charges	Price including freight charges
BBM 500, painted	A	325,–	138,–	463,–
BBM 500, hot-dip galvanized	A	359,–	138,–	497,–

Container for Building Materials Type BBP	Category	Price	Freight charges	Price including freight charges
BBP 100, painted	A	433,–	138,–	571,–
Lid, galvanized	A	189,–	138,–	327,–
Pick-up cones (pins) and angle iron traverse lock	A	51,–	10,–	61,–
BBP 100, hot-dip galvanized	A	511,–	138,–	649,–
Lid, galvanized	A	189,–	138,–	327,–
Pick-up cones (pins) and angle iron traverse lock	A	51,–	10,–	61,–

Tilting Traverse for Containers for Building Material Containers Type BBT	Category	Price	Freight charges	Price including freight charges
BBT, painted	A	571,–	226,–	797,–
BBT, hot-dip galvanized	A	649,–	226,–	875,–

Building Materials Container Type BC	Category	Price	Freight charges	Price including freight charges
BC 500, painted	B	957,–	226,–	1183,–
Lid, galvanized	B	143,–	16,–	159,–
Castor Set, polyamide, Load capacity 1350 kg / castor set	A	192,–	15,–	207,–
BC 500, hot-dip galvanized	B	1179,–	331,–	1510,–
Lid, galvanized	B	143,–	16,–	159,–
Castor Set, polyamide, Load capacity 1350 kg / castor set	A	192,–	15,–	207,–
BC 500 (brick clamp operated), painted	B	1026,–	226,–	1252,–
Lid, galvanized	B	143,–	16,–	159,–
Castor Set, polyamide, Load capacity 1350 kg / castor set	A	192,–	15,–	207,–
BC 500 (brick clamp operated), hot-dip galvanized	B	1250,–	331,–	1581,–
Lid, galvanized	B	143,–	16,–	159,–
Castor Set, polyamide, Load capacity 1350 kg / castor set	A	192,–	15,–	207,–
BC 1000, painted	B	1043,–	331,–	1374,–
Lid, galvanized	B	143,–	16,–	159,–
Castor Set, polyamide, Load capacity 1350 kg / castor set	A	192,–	15,–	207,–
BC 1000, hot-dip galvanized	B	1316,–	331,–	1647,–
Lid, galvanized	B	143,–	16,–	159,–
Castor Set, polyamide, Load capacity 1350 kg / castor set	A	192,–	15,–	207,–
BC 1000 (brick clamp operated), painted	B	1111,–	331,–	1442,–
Lid, galvanized	B	143,–	16,–	159,–
Castor Set, polyamide, Load capacity 1350 kg / castor set	A	192,–	15,–	207,–
BC 1000 (brick clamp operated), hot-dip galvanized	B	1386,–	331,–	1717,–
Lid, galvanized	B	143,–	16,–	159,–

Prices in EUR, valid EXW DE-46354 Südlohn, DE-38820 Halberstadt, unpacked
Freight charges valid CPT Bulgaria, islands and oversea territories excluded

BAUER GmbH
Eichendorffstr. 62
46354 Südlohn, Germany

Tel. +49 2862 70 90
info@bauer-suedlohn.com
www.bauer-suedlohn.com

Geschäftsführer
Patrick Bauer, Pascal Bauer
Amtsgericht Coesfeld HRB 5259

TÜVNORD
TÜV NORD CERT GmbH
DIN EN ISO 9001
tuev-nord.de

Price List 0726 en-BG
Forklift Truck Attachments

Building Materials Container Type BC	Category	Price	Freight charges	Price including freight charges
Castor Set, polyamide, Load capacity 1350 kg / castor set	A	192,–	15,–	207,–

Tilting Container Type BK	Category	Price	Freight charges	Price including freight charges
BK 30, painted	A	700,–	226,–	926,–
Lid, galvanized	A	98,–	18,–	116,–
Castor Set, polyamide, Load capacity 1350 kg / castor set	A	192,–	15,–	207,–
Heavy-duty Castor Set, polyamide, Load capacity 2550 kg / castor set	A	379,–	15,–	394,–
Skip Body Welded Oil and Watertight	A	78,–	0,–	78,–
BK 30, hot-dip galvanized	A	984,–	226,–	1210,–
Lid, galvanized	A	98,–	18,–	116,–
Castor Set, polyamide, Load capacity 1350 kg / castor set	A	192,–	15,–	207,–
Heavy-duty Castor Set, polyamide, Load capacity 2550 kg / castor set	A	379,–	15,–	394,–
Skip Body Welded Oil and Watertight	A	78,–	0,–	78,–
BK 50, painted	A	984,–	226,–	1210,–
Lid, galvanized	A	98,–	20,–	118,–
Castor Set, polyamide, Load capacity 1350 kg / castor set	A	192,–	15,–	207,–
Heavy-duty Castor Set, polyamide, Load capacity 2550 kg / castor set	A	379,–	15,–	394,–
Skip Body Welded Oil and Watertight	A	78,–	0,–	78,–
BK 50, hot-dip galvanized	A	1327,–	331,–	1658,–
Lid, galvanized	A	98,–	20,–	118,–
Castor Set, polyamide, Load capacity 1350 kg / castor set	A	192,–	15,–	207,–
Heavy-duty Castor Set, polyamide, Load capacity 2550 kg / castor set	A	379,–	15,–	394,–
Skip Body Welded Oil and Watertight	A	78,–	0,–	78,–
BK 80, painted	A	1297,–	331,–	1628,–
Lid, galvanized	A	144,–	22,–	166,–
Castor Set, polyamide, Load capacity 1350 kg / castor set	A	192,–	15,–	207,–
Heavy-duty Castor Set, polyamide, Load capacity 2550 kg / castor set	A	379,–	15,–	394,–
Skip Body Welded Oil and Watertight	A	78,–	0,–	78,–
BK 80, hot-dip galvanized	A	1814,–	331,–	2145,–
Lid, galvanized	A	144,–	22,–	166,–
Castor Set, polyamide, Load capacity 1350 kg / castor set	A	192,–	15,–	207,–
Heavy-duty Castor Set, polyamide, Load capacity 2550 kg / castor set	A	379,–	15,–	394,–
Skip Body Welded Oil and Watertight	A	78,–	0,–	78,–
BK 100, painted	A	1508,–	331,–	1839,–
Lid, galvanized	A	173,–	27,–	200,–
Castor Set, polyamide, Load capacity 1350 kg / castor set	A	192,–	15,–	207,–
Heavy-duty Castor Set, polyamide, Load capacity 2550 kg / castor set	A	379,–	15,–	394,–
Skip Body Welded Oil and Watertight	A	121,–	0,–	121,–
BK 100, hot-dip galvanized	A	2070,–	331,–	2401,–
Lid, galvanized	A	173,–	27,–	200,–
Castor Set, polyamide, Load capacity 1350 kg / castor set	A	192,–	15,–	207,–
Heavy-duty Castor Set, polyamide, Load capacity 2550 kg / castor set	A	379,–	15,–	394,–
Skip Body Welded Oil and Watertight	A	121,–	0,–	121,–
BK 120, painted	A	1640,–	331,–	1971,–
Lid, galvanized	A	184,–	32,–	216,–
Castor Set, polyamide, Load capacity 1350 kg / castor set	A	192,–	15,–	207,–

Prices in EUR, valid EXW DE-46354 Südlohn, DE-38820 Halberstadt, unpacked
Freight charges valid CPT Bulgaria, islands and oversea territories excluded

BAUER GmbH
Eichendorffstr. 62
46354 Südlohn, Germany

Tel. +49 2862 70 90
info@bauer-suedlohn.com
www.bauer-suedlohn.com

Geschäftsführer
Patrick Bauer, Pascal Bauer
Amtsgericht Coesfeld HRB 5259

TÜVNORD
TÜV NORD CERT GmbH
DIN EN ISO 9001
tuev-nord.de

Price List 0726 en-BG
Forklift Truck Attachments

Tilting Container Type BK	Category	Price	Freight charges	Price including freight charges
Heavy-duty Castor Set, polyamide, Load capacity 2550 kg / castor set	A	379,–	15,–	394,–
Skip Body Welded Oil and Watertight	A	121,–	0,–	121,–
BK 120, hot-dip galvanized	A	2235,–	331,–	2566,–
Lid, galvanized	A	184,–	32,–	216,–
Castor Set, polyamide, Load capacity 1350 kg / castor set	A	192,–	15,–	207,–
Heavy-duty Castor Set, polyamide, Load capacity 2550 kg / castor set	A	379,–	15,–	394,–
Skip Body Welded Oil and Watertight	A	121,–	0,–	121,–
BK 150, painted	A	1801,–	402,–	2203,–
Lid, galvanized	A	211,–	39,–	250,–
Castor Set, polyamide, Load capacity 1350 kg / castor set	A	192,–	15,–	207,–
Heavy-duty Castor Set, polyamide, Load capacity 2550 kg / castor set	A	379,–	15,–	394,–
Skip Body Welded Oil and Watertight	A	121,–	0,–	121,–
BK 150, hot-dip galvanized	A	2444,–	402,–	2846,–
Lid, galvanized	A	211,–	39,–	250,–
Castor Set, polyamide, Load capacity 1350 kg / castor set	A	192,–	15,–	207,–
Heavy-duty Castor Set, polyamide, Load capacity 2550 kg / castor set	A	379,–	15,–	394,–
Skip Body Welded Oil and Watertight	A	121,–	0,–	121,–
BK 200, painted	A	2240,–	402,–	2642,–
Lid, galvanized	A	223,–	138,–	361,–
Castor Set, polyamide, Load capacity 1350 kg / castor set	A	192,–	15,–	207,–
Heavy-duty Castor Set, polyamide, Load capacity 2550 kg / castor set	A	379,–	15,–	394,–
Skip Body Welded Oil and Watertight	A	121,–	0,–	121,–
BK 200, hot-dip galvanized	A	3052,–	582,–	3634,–
Lid, galvanized	A	223,–	138,–	361,–
Castor Set, polyamide, Load capacity 1350 kg / castor set	A	192,–	15,–	207,–
Heavy-duty Castor Set, polyamide, Load capacity 2550 kg / castor set	A	379,–	15,–	394,–
Skip Body Welded Oil and Watertight	A	121,–	0,–	121,–

Container With Drop Away Base Type BKB	Category	Price	Freight charges	Price including freight charges
BKB 500, painted	A	763,–	226,–	989,–
Lid, galvanized	A	196,–	18,–	214,–
Castor Set, polyamide, Load capacity 1350 kg / castor set	A	192,–	15,–	207,–
BKB 500, hot-dip galvanized	A	907,–	226,–	1133,–
Lid, galvanized	A	196,–	18,–	214,–
Castor Set, polyamide, Load capacity 1350 kg / castor set	A	192,–	15,–	207,–
BKB 700, painted	A	816,–	226,–	1042,–
Lid, galvanized	A	196,–	18,–	214,–
Castor Set, polyamide, Load capacity 1350 kg / castor set	A	192,–	15,–	207,–
BKB 700, hot-dip galvanized	A	960,–	226,–	1186,–
Lid, galvanized	A	196,–	18,–	214,–
Castor Set, polyamide, Load capacity 1350 kg / castor set	A	192,–	15,–	207,–
BKB 1000, painted	A	865,–	226,–	1091,–
Lid, galvanized	A	196,–	18,–	214,–
Castor Set, polyamide, Load capacity 1350 kg / castor set	A	192,–	15,–	207,–
BKB 1000, hot-dip galvanized	A	1029,–	226,–	1255,–
Lid, galvanized	A	196,–	18,–	214,–

Prices in EUR, valid EXW DE-46354 Südlohn, DE-38820 Halberstadt, unpacked
Freight charges valid CPT Bulgaria, islands and oversea territories excluded

BAUER GmbH
Eichendorffstr. 62
46354 Südlohn, Germany

Tel. +49 2862 70 90
info@bauer-suedlohn.com
www.bauer-suedlohn.com

Geschäftsführer
Patrick Bauer, Pascal Bauer
Amtsgericht Coesfeld HRB 5259

TÜVNORD
TÜV NORD CERT GmbH
DIN EN ISO 9001
tuev-nord.de

Price List 0726 en-BG
Forklift Truck Attachments

Container With Drop Away Base Type BKB	Category	Price	Freight charges	Price including freight charges
Castor Set, polyamide, Load capacity 1350 kg / castor set	A	192,–	15,–	207,–

Tilting Container Type BKC	Category	Price	Freight charges	Price including freight charges
BKC 200, painted	A	2308,–	582,–	2890,–
Lid, galvanized	A	450,–	138,–	588,–
Skip Body Welded Oil and Watertight	A	121,–	0,–	121,–
BKC 200, hot-dip galvanized	A	3089,–	582,–	3671,–
Lid, galvanized	A	450,–	138,–	588,–
Skip Body Welded Oil and Watertight	A	121,–	0,–	121,–
BKC 300, painted	A	2558,–	582,–	3140,–
Lid, galvanized	A	450,–	138,–	588,–
Skip Body Welded Oil and Watertight	A	121,–	0,–	121,–
BKC 300, hot-dip galvanized	A	3367,–	582,–	3949,–
Lid, galvanized	A	450,–	138,–	588,–
Skip Body Welded Oil and Watertight	A	121,–	0,–	121,–
BKC 400, painted	A	3150,–	582,–	3732,–
Lid, galvanized	A	450,–	226,–	676,–
Skip Body Welded Oil and Watertight	A	121,–	0,–	121,–
BKC 400, hot-dip galvanized	A	4067,–	763,–	4830,–
Lid, galvanized	A	450,–	226,–	676,–
Skip Body Welded Oil and Watertight	A	121,–	0,–	121,–
BKC 500, painted	A	3659,–	763,–	4422,–
Lid, galvanized	A	450,–	226,–	676,–
Skip Body Welded Oil and Watertight	A	121,–	0,–	121,–
BKC 500, hot-dip galvanized	A	4641,–	763,–	5404,–
Lid, galvanized	A	450,–	226,–	676,–
Skip Body Welded Oil and Watertight	A	121,–	0,–	121,–

Tilting Container Type BKC-H	Category	Price	Freight charges	Price including freight charges
BKC-H 200, painted	A	3422,–	582,–	4004,–
Lid, galvanized	A	450,–	138,–	588,–
Skip Body Welded Oil and Watertight	A	121,–	0,–	121,–
BKC-H 200, hot-dip galvanized	A	4204,–	582,–	4786,–
Lid, galvanized	A	450,–	138,–	588,–
Skip Body Welded Oil and Watertight	A	121,–	0,–	121,–
BKC-H 300, painted	A	3673,–	582,–	4255,–
Lid, galvanized	A	450,–	138,–	588,–
Skip Body Welded Oil and Watertight	A	121,–	0,–	121,–
BKC-H 300, hot-dip galvanized	A	4483,–	582,–	5065,–
Lid, galvanized	A	450,–	138,–	588,–
Skip Body Welded Oil and Watertight	A	121,–	0,–	121,–
BKC-H 400, painted	A	4265,–	582,–	4847,–
Lid, galvanized	A	450,–	226,–	676,–
Skip Body Welded Oil and Watertight	A	121,–	0,–	121,–
BKC-H 400, hot-dip galvanized	A	5182,–	763,–	5945,–

Prices in EUR, valid EXW DE-46354 Südlohn, DE-38820 Halberstadt, unpacked
Freight charges valid CPT Bulgaria, islands and oversea territories excluded

BAUER GmbH
Eichendorffstr. 62
46354 Südlohn, Germany

Tel. +49 2862 70 90
info@bauer-suedlohn.com
www.bauer-suedlohn.com

Geschäftsführer
Patrick Bauer, Pascal Bauer
Amtsgericht Coesfeld HRB 5259

TÜVNORD
TÜV NORD CERT GmbH
DIN EN ISO 9001
tuev-nord.de

Price List 0726 en-BG
Forklift Truck Attachments

Tilting Container Type BKC-H	Category	Price	Freight charges	Price including freight charges
Lid, galvanized	A	450,–	226,–	676,–
Skip Body Welded Oil and Watertight	A	121,–	0,–	121,–
BKC-H 500, painted	A	4774,–	763,–	5537,–
Lid, galvanized	A	450,–	226,–	676,–
Skip Body Welded Oil and Watertight	A	121,–	0,–	121,–
BKC-H 500, hot-dip galvanized	A	5756,–	763,–	6519,–
Lid, galvanized	A	450,–	226,–	676,–
Skip Body Welded Oil and Watertight	A	121,–	0,–	121,–

Tilting Container Type BKM	Category	Price	Freight charges	Price including freight charges
BKM 30, painted	A	700,–	226,–	926,–
Lid, galvanized	A	104,–	18,–	122,–
Castor Set, polyamide, Load capacity 1350 kg / castor set	A	192,–	15,–	207,–
Heavy-duty Castor Set, polyamide, Load capacity 2550 kg / castor set	A	379,–	15,–	394,–
Skip Body Welded Oil and Watertight	A	78,–	0,–	78,–
BKM 30, hot-dip galvanized	A	984,–	226,–	1210,–
Lid, galvanized	A	104,–	18,–	122,–
Castor Set, polyamide, Load capacity 1350 kg / castor set	A	192,–	15,–	207,–
Heavy-duty Castor Set, polyamide, Load capacity 2550 kg / castor set	A	379,–	15,–	394,–
Skip Body Welded Oil and Watertight	A	78,–	0,–	78,–
BKM 50, painted	A	984,–	226,–	1210,–
Lid, galvanized	A	130,–	21,–	151,–
Castor Set, polyamide, Load capacity 1350 kg / castor set	A	192,–	15,–	207,–
Heavy-duty Castor Set, polyamide, Load capacity 2550 kg / castor set	A	379,–	15,–	394,–
Skip Body Welded Oil and Watertight	A	78,–	0,–	78,–
BKM 50, hot-dip galvanized	A	1327,–	226,–	1553,–
Lid, galvanized	A	130,–	21,–	151,–
Castor Set, polyamide, Load capacity 1350 kg / castor set	A	192,–	15,–	207,–
Heavy-duty Castor Set, polyamide, Load capacity 2550 kg / castor set	A	379,–	15,–	394,–
Skip Body Welded Oil and Watertight	A	78,–	0,–	78,–
BKM 75, painted	A	1246,–	331,–	1577,–
Lid, galvanized	A	142,–	22,–	164,–
Castor Set, polyamide, Load capacity 1350 kg / castor set	A	192,–	15,–	207,–
Heavy-duty Castor Set, polyamide, Load capacity 2550 kg / castor set	A	379,–	15,–	394,–
Skip Body Welded Oil and Watertight	A	78,–	0,–	78,–
BKM 75, hot-dip galvanized	A	1672,–	331,–	2003,–
Lid, galvanized	A	142,–	22,–	164,–
Castor Set, polyamide, Load capacity 1350 kg / castor set	A	192,–	15,–	207,–
Heavy-duty Castor Set, polyamide, Load capacity 2550 kg / castor set	A	379,–	15,–	394,–
Skip Body Welded Oil and Watertight	A	78,–	0,–	78,–
BKM 100, painted	A	1508,–	331,–	1839,–
Lid, galvanized	A	185,–	27,–	212,–
Castor Set, polyamide, Load capacity 1350 kg / castor set	A	192,–	15,–	207,–
Heavy-duty Castor Set, polyamide, Load capacity 2550 kg / castor set	A	379,–	15,–	394,–
Skip Body Welded Oil and Watertight	A	121,–	0,–	121,–
BKM 100, hot-dip galvanized	A	2070,–	331,–	2401,–

Prices in EUR, valid EXW DE-46354 Südlohn, DE-38820 Halberstadt, unpacked
Freight charges valid CPT Bulgaria, islands and oversea territories excluded

BAUER GmbH
Eichendorffstr. 62
46354 Südlohn, Germany

Tel. +49 2862 70 90
info@bauer-suedlohn.com
www.bauer-suedlohn.com

Geschäftsführer
Patrick Bauer, Pascal Bauer
Amtsgericht Coesfeld HRB 5259

TÜVNORD
TÜV NORD CERT GmbH
DIN EN ISO 9001
tuev-nord.de

Price List 0726 en-BG
Forklift Truck Attachments

Tilting Container Type BKM	Category	Price	Freight charges	Price including freight charges
Lid, galvanized	A	185,–	27,–	212,–
Castor Set, polyamide, Load capacity 1350 kg / castor set	A	192,–	15,–	207,–
Heavy-duty Castor Set, polyamide, Load capacity 2550 kg / castor set	A	379,–	15,–	394,–
Skip Body Welded Oil and Watertight	A	121,–	0,–	121,–
BKM 150, painted	A	1801,–	402,–	2203,–
Lid, galvanized	A	271,–	36,–	307,–
Castor Set, polyamide, Load capacity 1350 kg / castor set	A	192,–	15,–	207,–
Heavy-duty Castor Set, polyamide, Load capacity 2550 kg / castor set	A	379,–	15,–	394,–
Skip Body Welded Oil and Watertight	A	121,–	0,–	121,–
BKM 150, hot-dip galvanized	A	2444,–	402,–	2846,–
Lid, galvanized	A	271,–	36,–	307,–
Castor Set, polyamide, Load capacity 1350 kg / castor set	A	192,–	15,–	207,–
Heavy-duty Castor Set, polyamide, Load capacity 2550 kg / castor set	A	379,–	15,–	394,–
Skip Body Welded Oil and Watertight	A	121,–	0,–	121,–
BKM 200, painted	A	2240,–	402,–	2642,–
Lid, galvanized	A	302,–	138,–	440,–
Castor Set, polyamide, Load capacity 1350 kg / castor set	A	192,–	15,–	207,–
Heavy-duty Castor Set, polyamide, Load capacity 2550 kg / castor set	A	379,–	15,–	394,–
Skip Body Welded Oil and Watertight	A	121,–	0,–	121,–
Lid, galvanized	A	302,–	138,–	440,–
Castor Set, polyamide, Load capacity 1350 kg / castor set	A	192,–	15,–	207,–
Heavy-duty Castor Set, polyamide, Load capacity 2550 kg / castor set	A	379,–	15,–	394,–
Skip Body Welded Oil and Watertight	A	121,–	0,–	121,–

Traverse For Stacking Tippers Type BKT	Category	Price	Freight charges	Price including freight charges
BKT 30, painted	A	368,–	226,–	594,–
Traverse Stand Type TS, hot-dip galvanized	A	78,–	8,–	86,–
BKT 55, painted	A	390,–	226,–	616,–
Traverse Stand Type TS, hot-dip galvanized	A	78,–	9,–	87,–
BKT 70, painted	A	390,–	226,–	616,–
Traverse Stand Type TS, hot-dip galvanized	A	78,–	9,–	87,–
BKT 90, painted	A	392,–	226,–	618,–
Traverse Stand Type TS, hot-dip galvanized	A	78,–	9,–	87,–
BKT 150, painted	A	631,–	226,–	857,–
Traverse Stand Type TS, hot-dip galvanized	A	78,–	9,–	87,–
BKT 200, painted	A	696,–	226,–	922,–
Traverse Stand Type TS, hot-dip galvanized	A	78,–	9,–	87,–

Shovel Type BSE	Category	Price	Freight charges	Price including freight charges
BSE 50, painted	A	1486,–	331,–	1817,–
BSE 75, painted	A	1769,–	331,–	2100,–
BSE 100, painted	A	2219,–	402,–	2621,–
BSE 150, painted	A	2507,–	402,–	2909,–
BSE 200, painted	A	2786,–	582,–	3368,–
BSE 250, painted	A	3433,–	635,–	4068,–

Prices in EUR, valid EXW DE-46354 Südlohn, DE-38820 Halberstadt, unpacked
Freight charges valid CPT Bulgaria, islands and oversea territories excluded

BAUER GmbH
Eichendorffstr. 62
46354 Südlohn, Germany

Tel. +49 2862 70 90
info@bauer-suedlohn.com
www.bauer-suedlohn.com

Geschäftsführer
Patrick Bauer, Pascal Bauer
Amtsgericht Coesfeld HRB 5259

TÜVNORD
TÜV NORD CERT GmbH
DIN EN ISO 9001
tuev-nord.de

Price List 0726 en-BG
Forklift Truck Attachments

Shovel Type BSI	Category	Price	Freight charges	Price including freight charges
BSI 50, painted	A	1257,–	226,–	1483,–
BSI 75, painted	A	1424,–	331,–	1755,–
BSI 100, painted	A	1786,–	331,–	2117,–

Stacking Tipper Type BSK	Category	Price	Freight charges	Price including freight charges
BSK 30, painted	A	265,–	138,–	403,–
Lid, galvanized	A	69,–	12,–	81,–
Castor Set, polyamide, Load capacity 1350 kg / castor set	A	192,–	15,–	207,–
Skip Body Welded Oil and Watertight	A	78,–	0,–	78,–
Set of 5 self-adhesive stickers with symbols for: glass, paper, plastic, metal, residual waste	A	29,–	on request	on request
BSK 30, hot-dip galvanized	A	320,–	138,–	458,–
Lid, galvanized	A	69,–	12,–	81,–
Castor Set, polyamide, Load capacity 1350 kg / castor set	A	192,–	15,–	207,–
Skip Body Welded Oil and Watertight	A	78,–	0,–	78,–
Set of 5 self-adhesive stickers with symbols for: glass, paper, plastic, metal, residual waste	A	29,–	on request	on request
BSK 55, painted	A	332,–	138,–	470,–
Lid, galvanized	A	98,–	15,–	113,–
Castor Set, polyamide, Load capacity 1350 kg / castor set	A	192,–	15,–	207,–
Skip Body Welded Oil and Watertight	A	78,–	0,–	78,–
Set of 5 self-adhesive stickers with symbols for: glass, paper, plastic, metal, residual waste	A	29,–	on request	on request
BSK 55, hot-dip galvanized	A	405,–	138,–	543,–
Lid, galvanized	A	98,–	15,–	113,–
Castor Set, polyamide, Load capacity 1350 kg / castor set	A	192,–	15,–	207,–
Skip Body Welded Oil and Watertight	A	78,–	0,–	78,–
Set of 5 self-adhesive stickers with symbols for: glass, paper, plastic, metal, residual waste	A	29,–	on request	on request
BSK 70, painted	A	352,–	138,–	490,–
Lid, galvanized	A	122,–	15,–	137,–
Castor Set, polyamide, Load capacity 1350 kg / castor set	A	192,–	15,–	207,–
Skip Body Welded Oil and Watertight	A	78,–	0,–	78,–
Set of 5 self-adhesive stickers with symbols for: glass, paper, plastic, metal, residual waste	A	29,–	on request	on request
BSK 70, hot-dip galvanized	A	457,–	138,–	595,–
Lid, galvanized	A	122,–	15,–	137,–
Castor Set, polyamide, Load capacity 1350 kg / castor set	A	192,–	15,–	207,–
Skip Body Welded Oil and Watertight	A	78,–	0,–	78,–
Set of 5 self-adhesive stickers with symbols for: glass, paper, plastic, metal, residual waste	A	29,–	on request	on request
BSK 90, painted	A	379,–	138,–	517,–
Lid, galvanized	A	166,–	18,–	184,–
Castor Set, polyamide, Load capacity 1350 kg / castor set	A	192,–	15,–	207,–
Skip Body Welded Oil and Watertight	A	78,–	0,–	78,–
Set of 5 self-adhesive stickers with symbols for: glass, paper, plastic, metal, residual waste	A	29,–	on request	on request
BSK 90, hot-dip galvanized	A	487,–	226,–	713,–
Lid, galvanized	A	166,–	18,–	184,–
Castor Set, polyamide, Load capacity 1350 kg / castor set	A	192,–	15,–	207,–
Skip Body Welded Oil and Watertight	A	78,–	0,–	78,–
Set of 5 self-adhesive stickers with symbols for: glass, paper, plastic, metal, residual waste	A	29,–	on request	on request
BSK 150, painted	A	871,–	226,–	1097,–

Prices in EUR, valid EXW DE-46354 Südlohn, DE-38820 Halberstadt, unpacked
Freight charges valid CPT Bulgaria, islands and oversea territories excluded

BAUER GmbH
Eichendorffstr. 62
46354 Südlohn, Germany

Tel. +49 2862 70 90
info@bauer-suedlohn.com
www.bauer-suedlohn.com

Geschäftsführer
Patrick Bauer, Pascal Bauer
Amtsgericht Coesfeld HRB 5259

TÜVNORD
TÜV NORD CERT GmbH
DIN EN ISO 9001
tuev-nord.de

Price List 0726 en-BG
Forklift Truck Attachments

Stacking Tipper Type BSK	Category	Price	Freight charges	Price including freight charges
Lid, galvanized	A	223,–	21,–	244,–
Castor Set, polyamide, Load capacity 1350 kg / castor set	A	192,–	15,–	207,–
Skip Body Welded Oil and Watertight	A	121,–	0,–	121,–
Set of 5 self-adhesive stickers with symbols for: glass, paper, plastic, metal, residual waste	A	29,–	on request	on request
BSK 150, hot-dip galvanized	A	1019,–	226,–	1245,–
Lid, galvanized	A	223,–	21,–	244,–
Castor Set, polyamide, Load capacity 1350 kg / castor set	A	192,–	15,–	207,–
Skip Body Welded Oil and Watertight	A	121,–	0,–	121,–
Set of 5 self-adhesive stickers with symbols for: glass, paper, plastic, metal, residual waste	A	29,–	on request	on request
BSK 200, painted	A	934,–	226,–	1160,–
Lid, galvanized	A	284,–	26,–	310,–
Castor Set, polyamide, Load capacity 1350 kg / castor set	A	192,–	15,–	207,–
Skip Body Welded Oil and Watertight	A	121,–	0,–	121,–
Set of 5 self-adhesive stickers with symbols for: glass, paper, plastic, metal, residual waste	A	29,–	on request	on request
BSK 200, hot-dip galvanized	A	1169,–	226,–	1395,–
Lid, galvanized	A	284,–	26,–	310,–
Castor Set, polyamide, Load capacity 1350 kg / castor set	A	192,–	15,–	207,–
Skip Body Welded Oil and Watertight	A	121,–	0,–	121,–
Set of 5 self-adhesive stickers with symbols for: glass, paper, plastic, metal, residual waste	A	29,–	on request	on request

Lattice Tilting Container Type BSK-G	Category	Price	Freight charges	Price including freight charges
BSK-G 90, painted	A	344,–	138,–	482,–
Lid, galvanized	A	166,–	18,–	184,–
Castor Set, polyamide, Load capacity 1350 kg / castor set	A	192,–	15,–	207,–
BSK-G 90, hot-dip galvanized	A	419,–	138,–	557,–
Lid, galvanized	A	166,–	18,–	184,–
Castor Set, polyamide, Load capacity 1350 kg / castor set	A	192,–	15,–	207,–

Swarf Stacking Tipper Type BSL	Category	Price	Freight charges	Price including freight charges
BSL 30, painted	A	590,–	138,–	728,–
Lid, galvanized	A	69,–	12,–	81,–
Castor Set, polyamide, Load capacity 1350 kg / castor set	A	192,–	15,–	207,–
BSL 30, hot-dip galvanized	A	679,–	138,–	817,–
Lid, galvanized	A	69,–	12,–	81,–
Castor Set, polyamide, Load capacity 1350 kg / castor set	A	192,–	15,–	207,–
BSL 55, painted	A	726,–	226,–	952,–
Lid, galvanized	A	98,–	15,–	113,–
Castor Set, polyamide, Load capacity 1350 kg / castor set	A	192,–	15,–	207,–
BSL 55, hot-dip galvanized	A	852,–	226,–	1078,–
Lid, galvanized	A	98,–	15,–	113,–
Castor Set, polyamide, Load capacity 1350 kg / castor set	A	192,–	15,–	207,–
BSL 70, painted	A	763,–	226,–	989,–
Lid, galvanized	A	122,–	15,–	137,–
Castor Set, polyamide, Load capacity 1350 kg / castor set	A	192,–	15,–	207,–
BSL 70, hot-dip galvanized	A	912,–	226,–	1138,–

Prices in EUR, valid EXW DE-46354 Südlohn, DE-38820 Halberstadt, unpacked
Freight charges valid CPT Bulgaria, islands and oversea territories excluded

BAUER GmbH
Eichendorffstr. 62
46354 Südlohn, Germany

Tel. +49 2862 70 90
info@bauer-suedlohn.com
www.bauer-suedlohn.com

Geschäftsführer
Patrick Bauer, Pascal Bauer
Amtsgericht Coesfeld HRB 5259

TÜVNORD
TÜV NORD CERT GmbH
DIN EN ISO 9001
tuev-nord.de

Price List 0726 en-BG
Forklift Truck Attachments

Swarf Stacking Tipper Type BSL	Category	Price	Freight charges	Price including freight charges
Lid, galvanized	A	122,–	15,–	137,–
Castor Set, polyamide, Load capacity 1350 kg / castor set	A	192,–	15,–	207,–
BSL 90, painted	A	830,–	226,–	1056,–
Lid, galvanized	A	166,–	18,–	184,–
Castor Set, polyamide, Load capacity 1350 kg / castor set	A	192,–	15,–	207,–
BSL 90, hot-dip galvanized	A	1004,–	226,–	1230,–
Lid, galvanized	A	166,–	18,–	184,–
Castor Set, polyamide, Load capacity 1350 kg / castor set	A	192,–	15,–	207,–
BSL 150, painted	A	1227,–	226,–	1453,–
Lid, galvanized	A	223,–	21,–	244,–
Castor Set, polyamide, Load capacity 1350 kg / castor set	A	192,–	15,–	207,–
BSL 150, hot-dip galvanized	A	1490,–	331,–	1821,–
Lid, galvanized	A	223,–	21,–	244,–
Castor Set, polyamide, Load capacity 1350 kg / castor set	A	192,–	15,–	207,–
BSL 200, painted	A	1327,–	331,–	1658,–
Lid, galvanized	A	284,–	26,–	310,–
Castor Set, polyamide, Load capacity 1350 kg / castor set	A	192,–	15,–	207,–
BSL 200, hot-dip galvanized	A	1792,–	331,–	2123,–
Lid, galvanized	A	284,–	26,–	310,–
Castor Set, polyamide, Load capacity 1350 kg / castor set	A	192,–	15,–	207,–

Shovel Type BSM	Category	Price	Freight charges	Price including freight charges
BSM 50, painted	A	1486,–	226,–	1712,–
BSM 75, painted	A	1769,–	331,–	2100,–
BSM 100, painted	A	2219,–	402,–	2621,–
BSM 150, painted	A	2507,–	402,–	2909,–
BSM 200, painted	A	2786,–	582,–	3368,–
BSM 250, painted	A	3433,–	635,–	4068,–

Swarf Stacking Tipper Type BSS	Category	Price	Freight charges	Price including freight charges
BSS 30, painted	A	422,–	138,–	560,–
Lid, galvanized	A	69,–	12,–	81,–
Castor Set, polyamide, Load capacity 1350 kg / castor set	A	192,–	15,–	207,–
BSS 30, hot-dip galvanized	A	490,–	138,–	628,–
Lid, galvanized	A	69,–	12,–	81,–
Castor Set, polyamide, Load capacity 1350 kg / castor set	A	192,–	15,–	207,–
BSS 55, painted	A	523,–	138,–	661,–
Lid, galvanized	A	98,–	15,–	113,–
Castor Set, polyamide, Load capacity 1350 kg / castor set	A	192,–	15,–	207,–
BSS 55, hot-dip galvanized	A	648,–	138,–	786,–
Lid, galvanized	A	98,–	15,–	113,–
Castor Set, polyamide, Load capacity 1350 kg / castor set	A	192,–	15,–	207,–
BSS 70, painted	A	561,–	138,–	699,–
Lid, galvanized	A	122,–	15,–	137,–
Castor Set, polyamide, Load capacity 1350 kg / castor set	A	192,–	15,–	207,–

Prices in EUR, valid EXW DE-46354 Südlohn, DE-38820 Halberstadt, unpacked
Freight charges valid CPT Bulgaria, islands and oversea territories excluded

BAUER GmbH
Eichendorffstr. 62
46354 Südlohn, Germany

Tel. +49 2862 70 90
info@bauer-suedlohn.com
www.bauer-suedlohn.com

Geschäftsführer
Patrick Bauer, Pascal Bauer
Amtsgericht Coesfeld HRB 5259

TÜVNORD
TÜV NORD CERT GmbH
DIN EN ISO 9001
tuev-nord.de

Price List 0726 en-BG
Forklift Truck Attachments

Swarf Stacking Tipper Type BSS	Category	Price	Freight charges	Price including freight charges
BSS 70, hot-dip galvanized	A	708,–	226,–	934,–
Lid, galvanized	A	122,–	15,–	137,–
Castor Set, polyamide, Load capacity 1350 kg / castor set	A	192,–	15,–	207,–
BSS 90, painted	A	597,–	226,–	823,–
Lid, galvanized	A	166,–	18,–	184,–
Castor Set, polyamide, Load capacity 1350 kg / castor set	A	192,–	15,–	207,–
BSS 90, hot-dip galvanized	A	765,–	226,–	991,–
Lid, galvanized	A	166,–	18,–	184,–
Castor Set, polyamide, Load capacity 1350 kg / castor set	A	192,–	15,–	207,–
BSS 150, painted	A	907,–	226,–	1133,–
Lid, galvanized	A	223,–	21,–	244,–
Castor Set, polyamide, Load capacity 1350 kg / castor set	A	192,–	15,–	207,–
BSS 150, hot-dip galvanized	A	1166,–	226,–	1392,–
Lid, galvanized	A	223,–	21,–	244,–
Castor Set, polyamide, Load capacity 1350 kg / castor set	A	192,–	15,–	207,–
BSS 200, painted	A	1024,–	226,–	1250,–
Lid, galvanized	A	284,–	26,–	310,–
Castor Set, polyamide, Load capacity 1350 kg / castor set	A	192,–	15,–	207,–
BSS 200, hot-dip galvanized	A	1371,–	331,–	1702,–
Lid, galvanized	A	284,–	26,–	310,–
Castor Set, polyamide, Load capacity 1350 kg / castor set	A	192,–	15,–	207,–

Traverse For Stacking Tippers Type BST	Category	Price	Freight charges	Price including freight charges
BST 30, painted	A	332,–	138,–	470,–
Traverse Stand Type TS, hot-dip galvanized	A	78,–	8,–	86,–
BST 55, painted	A	354,–	138,–	492,–
Traverse Stand Type TS, hot-dip galvanized	A	78,–	9,–	87,–
BST 70, painted	A	354,–	138,–	492,–
Traverse Stand Type TS, hot-dip galvanized	A	78,–	9,–	87,–
BST 90, painted	A	368,–	138,–	506,–
Traverse Stand Type TS, hot-dip galvanized	A	78,–	9,–	87,–
BST 150, painted	A	551,–	226,–	777,–
Traverse Stand Type TS, hot-dip galvanized	A	78,–	9,–	87,–
BST 200, painted	A	612,–	226,–	838,–
Traverse Stand Type TS, hot-dip galvanized	A	78,–	9,–	87,–

Traverse For Stacking Tippers Type BST-H	Category	Price	Freight charges	Price including freight charges
BST-H 30, painted	A	2127,–	226,–	2353,–
Traverse Stand Type TS, hot-dip galvanized	A	78,–	8,–	86,–
BST-H 55, painted	A	2257,–	226,–	2483,–
Traverse Stand Type TS, hot-dip galvanized	A	78,–	8,–	86,–
BST-H 70, painted	A	2257,–	226,–	2483,–
Traverse Stand Type TS, hot-dip galvanized	A	78,–	8,–	86,–
BST-H 90, painted	A	2374,–	226,–	2600,–
Traverse Stand Type TS, hot-dip galvanized	A	78,–	8,–	86,–

Prices in EUR, valid EXW DE-46354 Südlohn, DE-38820 Halberstadt, unpacked
Freight charges valid CPT Bulgaria, islands and oversea territories excluded

BAUER GmbH
Eichendorffstr. 62
46354 Südlohn, Germany

Tel. +49 2862 70 90
info@bauer-suedlohn.com
www.bauer-suedlohn.com

Geschäftsführer
Patrick Bauer, Pascal Bauer
Amtsgericht Coesfeld HRB 5259

TÜVNORD
TÜV NORD CERT GmbH
DIN EN ISO 9001
tuev-nord.de

Price List 0726 en-BG
Forklift Truck Attachments

Traverse For Stacking Tippers Type BST-H	Category	Price	Freight charges	Price including freight charges
BST-H 150, painted	A	2700,–	331,–	3031,–
Traverse Stand Type TS, hot-dip galvanized	A	78,–	9,–	87,–
BST-H 200, painted	A	2972,–	331,–	3303,–
Traverse Stand Type TS, hot-dip galvanized	A	78,–	9,–	87,–

Traverse For Stacking Tippers Type BST-U	Category	Price	Freight charges	Price including freight charges
BST-U 30, painted	A	956,–	226,–	1182,–
BST-U 55, painted	A	1020,–	226,–	1246,–
BST-U 70, painted	A	1020,–	226,–	1246,–
BST-U 90, painted	A	1047,–	226,–	1273,–

Beam Traverse Type BT	Category	Price	Freight charges	Price including freight charges
BT 3001, painted	A	1877,–	308,–	2185,–
Support frames, hot-dip galvanized	A	276,–	138,–	414,–
BT 3002, painted	A	2117,–	308,–	2425,–
Support frames, hot-dip galvanized	A	276,–	138,–	414,–
BT 3003, painted	A	2276,–	308,–	2584,–
Support frames, hot-dip galvanized	A	276,–	138,–	414,–
BT 3005, painted	A	2596,–	412,–	3008,–
Support frames, hot-dip galvanized	A	276,–	138,–	414,–

Filling Hopper Type BTM	Category	Price	Freight charges	Price including freight charges
BTM, painted	A	2461,–	402,–	2863,–

Filling Hopper Type BTS	Category	Price	Freight charges	Price including freight charges
BTS, painted	A	2107,–	402,–	2509,–

Bin Type C	Category	Price	Freight charges	Price including freight charges
C 30, painted	A	422,–	138,–	560,–
C 30, hot-dip galvanized	A	463,–	138,–	601,–
C 80, painted	A	607,–	138,–	745,–
C 80, hot-dip galvanized	A	653,–	138,–	791,–

Swarf Bin Type CS	Category	Price	Freight charges	Price including freight charges
CS 30, painted	A	486,–	138,–	624,–
CS 30, hot-dip galvanized	A	532,–	138,–	670,–
CS 80, painted	A	717,–	138,–	855,–
CS 80, hot-dip galvanized	A	766,–	226,–	992,–

Shovel Type DGS	Category	Price	Freight charges	Price including freight charges
DGS 500, painted	A	2655,–	331,–	2986,–
DGS 700, painted	A	2685,–	331,–	3016,–
DGS 950, painted	A	2723,–	402,–	3125,–
DGS 1200, painted	A	2924,–	402,–	3326,–

Prices in EUR, valid EXW DE-46354 Südlohn, DE-38820 Halberstadt, unpacked
Freight charges valid CPT Bulgaria, islands and oversea territories excluded

BAUER GmbH
Eichendorffstr. 62
46354 Südlohn, Germany

Tel. +49 2862 70 90
info@bauer-suedlohn.com
www.bauer-suedlohn.com

Geschäftsführer
Patrick Bauer, Pascal Bauer
Amtsgericht Coesfeld HRB 5259

TÜVNORD
TÜV NORD CERT GmbH
DIN EN ISO 9001
tuev-nord.de

Price List 0726 en-BG
Forklift Truck Attachments

Tilting Container Type DUO	Category	Price	Freight charges	Price including freight charges
DUO, painted	A	1867,–	331,–	2198,–
Lid, galvanized	A	236,–	27,–	263,–
Castor Set, polyamide, Load capacity 1350 kg / castor set	A	192,–	15,–	207,–
Set of 5 self-adhesive stickers with symbols for: glass, paper, plastic, metal, residual waste	A	29,–	on request	on request

Tilting Container Type EXPO®	Category	Price	Freight charges	Price including freight charges
EXPO 150, painted	A	608,–	138,–	746,–
Lid, galvanized	A	174,–	18,–	192,–
Castor Set, polyamide, Load capacity 1050 kg / castor set	A	156,–	15,–	171,–
Skip Body Welded Oil and Watertight	A	78,–	0,–	78,–
EXPO 150, hot-dip galvanized	A	717,–	138,–	855,–
Lid, galvanized	A	174,–	18,–	192,–
Castor Set, polyamide, Load capacity 1050 kg / castor set	A	156,–	15,–	171,–
Skip Body Welded Oil and Watertight	A	78,–	0,–	78,–
EXPO 225, painted	A	662,–	138,–	800,–
Lid, galvanized	A	174,–	18,–	192,–
Castor Set, polyamide, Load capacity 1050 kg / castor set	A	156,–	15,–	171,–
Skip Body Welded Oil and Watertight	A	78,–	0,–	78,–
EXPO 225, hot-dip galvanized	A	785,–	138,–	923,–
Lid, galvanized	A	174,–	18,–	192,–
Castor Set, polyamide, Load capacity 1050 kg / castor set	A	156,–	15,–	171,–
Skip Body Welded Oil and Watertight	A	78,–	0,–	78,–
EXPO 275, painted	A	691,–	138,–	829,–
Lid, galvanized	A	174,–	18,–	192,–
Castor Set, polyamide, Load capacity 1050 kg / castor set	A	156,–	15,–	171,–
Skip Body Welded Oil and Watertight	A	78,–	0,–	78,–
EXPO 275, hot-dip galvanized	A	826,–	138,–	964,–
Lid, galvanized	A	174,–	18,–	192,–
Castor Set, polyamide, Load capacity 1050 kg / castor set	A	156,–	15,–	171,–
Skip Body Welded Oil and Watertight	A	78,–	0,–	78,–
EXPO 300, painted	A	623,–	226,–	849,–
Lid, galvanized	A	174,–	18,–	192,–
Castor Set, polyamide, Load capacity 1350 kg / castor set	A	192,–	15,–	207,–
Skip Body Welded Oil and Watertight	A	78,–	0,–	78,–
EXPO 300, hot-dip galvanized	A	798,–	226,–	1024,–
Lid, galvanized	A	174,–	18,–	192,–
Castor Set, polyamide, Load capacity 1350 kg / castor set	A	192,–	15,–	207,–
Skip Body Welded Oil and Watertight	A	78,–	0,–	78,–
EXPO 600, painted	A	733,–	226,–	959,–
Lid, galvanized	A	196,–	22,–	218,–
Castor Set, polyamide, Load capacity 1350 kg / castor set	A	192,–	15,–	207,–
Skip Body Welded Oil and Watertight	A	78,–	0,–	78,–
EXPO 600, hot-dip galvanized	A	879,–	226,–	1105,–
Lid, galvanized	A	196,–	22,–	218,–
Castor Set, polyamide, Load capacity 1350 kg / castor set	A	192,–	15,–	207,–
Skip Body Welded Oil and Watertight	A	78,–	0,–	78,–

Prices in EUR, valid EXW DE-46354 Südlohn, DE-38820 Halberstadt, unpacked
Freight charges valid CPT Bulgaria, islands and oversea territories excluded

BAUER GmbH
Eichendorffstr. 62
46354 Südlohn, Germany

Tel. +49 2862 70 90
info@bauer-suedlohn.com
www.bauer-suedlohn.com

Geschäftsführer
Patrick Bauer, Pascal Bauer
Amtsgericht Coesfeld HRB 5259

TÜVNORD
TÜV NORD CERT GmbH
DIN EN ISO 9001
tuev-nord.de

Price List 0726 en-BG
Forklift Truck Attachments

Tilting Container Type EXPO®	Category	Price	Freight charges	Price including freight charges
EXPO 900, painted	A	818,–	226,–	1044,–
Lid, galvanized	A	223,–	27,–	250,–
Castor Set, polyamide, Load capacity 1350 kg / castor set	A	192,–	15,–	207,–
Skip Body Welded Oil and Watertight	A	78,–	0,–	78,–
EXPO 900, hot-dip galvanized	A	964,–	226,–	1190,–
Lid, galvanized	A	223,–	27,–	250,–
Castor Set, polyamide, Load capacity 1350 kg / castor set	A	192,–	15,–	207,–
Skip Body Welded Oil and Watertight	A	78,–	0,–	78,–
EXPO 1200, painted	A	885,–	331,–	1216,–
Lid, galvanized	A	223,–	26,–	249,–
Castor Set, polyamide, Load capacity 1350 kg / castor set	A	192,–	15,–	207,–
Skip Body Welded Oil and Watertight	A	121,–	0,–	121,–
EXPO 1200, hot-dip galvanized	A	1042,–	331,–	1373,–
Lid, galvanized	A	223,–	26,–	249,–
Castor Set, polyamide, Load capacity 1350 kg / castor set	A	192,–	15,–	207,–
Skip Body Welded Oil and Watertight	A	121,–	0,–	121,–
EXPO 1700, painted	A	1202,–	331,–	1533,–
Lid, galvanized	A	276,–	33,–	309,–
Castor Set, polyamide, Load capacity 1350 kg / castor set	A	192,–	15,–	207,–
Skip Body Welded Oil and Watertight	A	121,–	0,–	121,–
EXPO 1700, hot-dip galvanized	A	1435,–	331,–	1766,–
Lid, galvanized	A	276,–	33,–	309,–
Castor Set, polyamide, Load capacity 1350 kg / castor set	A	192,–	15,–	207,–
Skip Body Welded Oil and Watertight	A	121,–	0,–	121,–
EXPO 2100, painted	A	1325,–	331,–	1656,–
Lid, galvanized	A	360,–	36,–	396,–
Castor Set, polyamide, Load capacity 1350 kg / castor set	A	192,–	15,–	207,–
Skip Body Welded Oil and Watertight	A	121,–	0,–	121,–
EXPO 2100, hot-dip galvanized	A	1606,–	331,–	1937,–
Lid, galvanized	A	360,–	36,–	396,–
Castor Set, polyamide, Load capacity 1350 kg / castor set	A	192,–	15,–	207,–
Skip Body Welded Oil and Watertight	A	121,–	0,–	121,–

Swarf Tilting Container Type EXPO®-E	Category	Price	Freight charges	Price including freight charges
EXPO-E 150, painted	A	729,–	138,–	867,–
Lid, galvanized	A	174,–	18,–	192,–
Castor Set, polyamide, Load capacity 1050 kg / castor set	A	156,–	15,–	171,–
EXPO-E 150, hot-dip galvanized	A	837,–	138,–	975,–
Lid, galvanized	A	174,–	18,–	192,–
Castor Set, polyamide, Load capacity 1050 kg / castor set	A	156,–	15,–	171,–
EXPO-E 225, painted	A	782,–	138,–	920,–
Lid, galvanized	A	174,–	18,–	192,–
Castor Set, polyamide, Load capacity 1050 kg / castor set	A	156,–	15,–	171,–
EXPO-E 225, hot-dip galvanized	A	907,–	138,–	1045,–
Lid, galvanized	A	174,–	18,–	192,–
Castor Set, polyamide, Load capacity 1050 kg / castor set	A	156,–	15,–	171,–

Prices in EUR, valid EXW DE-46354 Südlohn, DE-38820 Halberstadt, unpacked
Freight charges valid CPT Bulgaria, islands and oversea territories excluded

BAUER GmbH
Eichendorffstr. 62
46354 Südlohn, Germany

Tel. +49 2862 70 90
info@bauer-suedlohn.com
www.bauer-suedlohn.com

Geschäftsführer
Patrick Bauer, Pascal Bauer
Amtsgericht Coesfeld HRB 5259

TÜVNORD
TÜV NORD CERT GmbH
DIN EN ISO 9001
tuev-nord.de

Price List 0726 en-BG
Forklift Truck Attachments

Swarf Tilting Container Type EXPO®-E	Category	Price	Freight charges	Price including freight charges
EXPO-E 275, painted	A	812,–	138,–	950,–
Lid, galvanized	A	174,–	18,–	192,–
Castor Set, polyamide, Load capacity 1050 kg / castor set	A	156,–	15,–	171,–
EXPO-E 275, hot-dip galvanized	A	944,–	138,–	1082,–
Lid, galvanized	A	174,–	18,–	192,–
Castor Set, polyamide, Load capacity 1050 kg / castor set	A	156,–	15,–	171,–
EXPO-E 300, painted	A	744,–	226,–	970,–
Lid, galvanized	A	174,–	18,–	192,–
Castor Set, polyamide, Load capacity 1350 kg / castor set	A	192,–	15,–	207,–
EXPO-E 300, hot-dip galvanized	A	919,–	226,–	1145,–
Lid, galvanized	A	174,–	18,–	192,–
Castor Set, polyamide, Load capacity 1350 kg / castor set	A	192,–	15,–	207,–
EXPO-E 600, painted	A	853,–	226,–	1079,–
Lid, galvanized	A	196,–	22,–	218,–
Castor Set, polyamide, Load capacity 1350 kg / castor set	A	192,–	15,–	207,–
EXPO-E 600, hot-dip galvanized	A	999,–	226,–	1225,–
Lid, galvanized	A	196,–	22,–	218,–
Castor Set, polyamide, Load capacity 1350 kg / castor set	A	192,–	15,–	207,–
EXPO-E 900, painted	A	938,–	226,–	1164,–
Lid, galvanized	A	223,–	27,–	250,–
Castor Set, polyamide, Load capacity 1350 kg / castor set	A	192,–	15,–	207,–
EXPO-E 900, hot-dip galvanized	A	1085,–	226,–	1311,–
Lid, galvanized	A	223,–	27,–	250,–
Castor Set, polyamide, Load capacity 1350 kg / castor set	A	192,–	15,–	207,–
EXPO-E 1200, painted	A	1048,–	331,–	1379,–
Lid, galvanized	A	223,–	26,–	249,–
Castor Set, polyamide, Load capacity 1350 kg / castor set	A	192,–	15,–	207,–
EXPO-E 1200, hot-dip galvanized	A	1204,–	331,–	1535,–
Lid, galvanized	A	223,–	26,–	249,–
Castor Set, polyamide, Load capacity 1350 kg / castor set	A	192,–	15,–	207,–
EXPO-E 1700, painted	A	1365,–	331,–	1696,–
Lid, galvanized	A	276,–	33,–	309,–
Castor Set, polyamide, Load capacity 1350 kg / castor set	A	192,–	15,–	207,–
EXPO-E 1700, hot-dip galvanized	A	1598,–	331,–	1929,–
Lid, galvanized	A	276,–	33,–	309,–
Castor Set, polyamide, Load capacity 1350 kg / castor set	A	192,–	15,–	207,–
EXPO-E 2100, painted	A	1488,–	331,–	1819,–
Lid, galvanized	A	360,–	36,–	396,–
Castor Set, polyamide, Load capacity 1350 kg / castor set	A	192,–	15,–	207,–
EXPO-E 2100, hot-dip galvanized	A	1768,–	331,–	2099,–
Lid, galvanized	A	360,–	36,–	396,–
Castor Set, polyamide, Load capacity 1350 kg / castor set	A	192,–	15,–	207,–

Container With Drop Away Base Type FB	Category	Price	Freight charges	Price including freight charges
FB 500, painted	A	809,–	226,–	1035,–
Lid, galvanized	A	196,–	15,–	211,–

Prices in EUR, valid EXW DE-46354 Südlohn, DE-38820 Halberstadt, unpacked
Freight charges valid CPT Bulgaria, islands and oversea territories excluded

BAUER GmbH
Eichendorffstr. 62
46354 Südlohn, Germany

Tel. +49 2862 70 90
info@bauer-suedlohn.com
www.bauer-suedlohn.com

Geschäftsführer
Patrick Bauer, Pascal Bauer
Amtsgericht Coesfeld HRB 5259

TÜVNORD
TÜV NORD CERT GmbH
DIN EN ISO 9001
tuev-nord.de

Price List 0726 en-BG
Forklift Truck Attachments

Container With Drop Away Base Type FB	Category	Price	Freight charges	Price including freight charges
Castor Set, polyamide, Load capacity 1350 kg / castor set	A	192,–	15,–	207,–
Guiding Plates, galvanized	A	116,–	12,–	128,–
FB 500, hot-dip galvanized	A	994,–	226,–	1220,–
Lid, galvanized	A	196,–	15,–	211,–
Castor Set, polyamide, Load capacity 1350 kg / castor set	A	192,–	15,–	207,–
Guiding Plates, galvanized	A	116,–	12,–	128,–
FB 750, painted	A	880,–	226,–	1106,–
Lid, galvanized	A	196,–	15,–	211,–
Castor Set, polyamide, Load capacity 1350 kg / castor set	A	192,–	15,–	207,–
Guiding Plates, galvanized	A	116,–	12,–	128,–
FB 750, hot-dip galvanized	A	1075,–	226,–	1301,–
Lid, galvanized	A	196,–	15,–	211,–
Castor Set, polyamide, Load capacity 1350 kg / castor set	A	192,–	15,–	207,–
Guiding Plates, galvanized	A	116,–	12,–	128,–
FB 1000, painted	A	942,–	226,–	1168,–
Lid, galvanized	A	238,–	18,–	256,–
Castor Set, polyamide, Load capacity 1350 kg / castor set	A	192,–	15,–	207,–
Guiding Plates, galvanized	A	116,–	12,–	128,–
FB 1000, hot-dip galvanized	A	1157,–	226,–	1383,–
Lid, galvanized	A	238,–	18,–	256,–
Castor Set, polyamide, Load capacity 1350 kg / castor set	A	192,–	15,–	207,–
Guiding Plates, galvanized	A	116,–	12,–	128,–
FB 1500, painted	A	1105,–	331,–	1436,–
Lid, galvanized	A	351,–	21,–	372,–
Castor Set, polyamide, Load capacity 1350 kg / castor set	A	192,–	15,–	207,–
Guiding Plates, galvanized	A	116,–	12,–	128,–
FB 1500, hot-dip galvanized	A	1392,–	331,–	1723,–
Lid, galvanized	A	351,–	21,–	372,–
Castor Set, polyamide, Load capacity 1350 kg / castor set	A	192,–	15,–	207,–
Guiding Plates, galvanized	A	116,–	12,–	128,–
FB 2000, painted	A	1192,–	331,–	1523,–
Lid, galvanized	A	351,–	21,–	372,–
Castor Set, polyamide, Load capacity 1350 kg / castor set	A	192,–	15,–	207,–
Guiding Plates, galvanized	A	116,–	12,–	128,–
FB 2000, hot-dip galvanized	A	1512,–	331,–	1843,–
Lid, galvanized	A	351,–	21,–	372,–
Castor Set, polyamide, Load capacity 1350 kg / castor set	A	192,–	15,–	207,–
Guiding Plates, galvanized	A	116,–	12,–	128,–

Drum Tipper Type FD/L-HK	Category	Price	Freight charges	Price including freight charges
FD/L-HK, painted	B	2324,–	226,–	2550,–
FD/L-HK, hot-dip galvanized	B	2765,–	226,–	2991,–

Drum Tipper Type FD/L-K	Category	Price	Freight charges	Price including freight charges
FD/L-K, painted	B	2515,–	226,–	2741,–

Prices in EUR, valid EXW DE-46354 Südlohn, DE-38820 Halberstadt, unpacked
Freight charges valid CPT Bulgaria, islands and oversea territories excluded

BAUER GmbH
Eichendorffstr. 62
46354 Südlohn, Germany

Tel. +49 2862 70 90
info@bauer-suedlohn.com
www.bauer-suedlohn.com

Geschäftsführer
Patrick Bauer, Pascal Bauer
Amtsgericht Coesfeld HRB 5259

TÜVNORD
TÜV NORD CERT GmbH
DIN EN ISO 9001
tuev-nord.de

Price List 0726 en-BG
Forklift Truck Attachments

Drum Tipper Type FD/L-K	Category	Price	Freight charges	Price including freight charges
FD/L-K, hot-dip galvanized	B	2965,–	226,–	3191,–

Drum Tipper Type FD-H	Category	Price	Freight charges	Price including freight charges
FD-H, painted	B	2593,–	138,–	2731,–
FD-H, hot-dip galvanized	B	2828,–	138,–	2966,–

Drum Tipper Type FD-HK	Category	Price	Freight charges	Price including freight charges
FD-HK, painted	B	1997,–	138,–	2135,–
FD-HK, hot-dip galvanized	B	2237,–	138,–	2375,–

Drum Tipper Type FD-K	Category	Price	Freight charges	Price including freight charges
FD-K, painted	B	2188,–	138,–	2326,–
FD-K, hot-dip galvanized	B	2437,–	138,–	2575,–

Drum Tipper Type FD-SK	Category	Price	Freight charges	Price including freight charges
FD-SK, painted	B	1997,–	138,–	2135,–
FD-SK, hot-dip galvanized	B	2237,–	138,–	2375,–

Drum Jack Type FH	Category	Price	Freight charges	Price including freight charges
FH-I 120, painted	B	1645,–	138,–	1783,–
FH-I 120, hot-dip galvanized	B	1823,–	138,–	1961,–
FH-I 220, painted	B	1645,–	138,–	1783,–
FH-I 220, hot-dip galvanized	B	1852,–	138,–	1990,–
FH-II 120, painted	B	2402,–	138,–	2540,–
FH-II 120, hot-dip galvanized	B	2673,–	138,–	2811,–
FH-II 220, painted	B	2402,–	138,–	2540,–
FH-II 220, hot-dip galvanized	B	2729,–	138,–	2867,–

Drum Gripper Type FK	Category	Price	Freight charges	Price including freight charges
FK-I, painted	B	1251,–	138,–	1389,–
FK-I, hot-dip galvanized	B	1524,–	138,–	1662,–
FK-II, painted	B	1488,–	226,–	1714,–
FK-II, hot-dip galvanized	B	1882,–	226,–	2108,–

Drum Clamp Type FKL	Category	Price	Freight charges	Price including freight charges
FKL, painted	B	480,–	118,–	598,–

Drum Tipper Type FLEX-HK	Category	Price	Freight charges	Price including freight charges
FLEX-HK, painted	B	2164,–	138,–	2302,–
Shelf Drum Pallet RP, galvanized	B	145,–	118,–	263,–
FLEX-HK, hot-dip galvanized	B	2338,–	138,–	2476,–
Shelf Drum Pallet RP, galvanized	B	145,–	118,–	263,–

Prices in EUR, valid EXW DE-46354 Südlohn, DE-38820 Halberstadt, unpacked
Freight charges valid CPT Bulgaria, islands and oversea territories excluded

BAUER GmbH
Eichendorffstr. 62
46354 Südlohn, Germany

Tel. +49 2862 70 90
info@bauer-suedlohn.com
www.bauer-suedlohn.com

Geschäftsführer
Patrick Bauer, Pascal Bauer
Amtsgericht Coesfeld HRB 5259

TÜVNORD
TÜV NORD CERT GmbH
DIN EN ISO 9001
tuev-nord.de

Price List 0726 en-BG
Forklift Truck Attachments

Drum Tipper Type FLEX-K	Category	Price	Freight charges	Price including freight charges
FLEX-K, painted	B	2363,–	138,–	2501,–
Shelf Drum Pallet RP, galvanized	B	145,–	118,–	263,–
FLEX-K, hot-dip galvanized	B	2533,–	138,–	2671,–
Shelf Drum Pallet RP, galvanized	B	145,–	118,–	263,–

Drum Traverse Type FT/M	Category	Price	Freight charges	Price including freight charges
FT/M, galvanized	B	316,–	118,–	434,–

Drum Traverse Type FT/MK	Category	Price	Freight charges	Price including freight charges
FT/MK, galvanized	B	362,–	118,–	480,–

Drum Turner Type FW	Category	Price	Freight charges	Price including freight charges
FW-I, painted	B	1389,–	226,–	1615,–
FW-I, hot-dip galvanized	B	1803,–	226,–	2029,–
FW-II, painted	B	1945,–	226,–	2171,–
FW-II, hot-dip galvanized	B	2533,–	226,–	2759,–

Drum Turning Claw Type FWZ	Category	Price	Freight charges	Price including freight charges
FWZ-60, painted	B	1355,–	138,–	1493,–
FWZ-60, galvanized	B	1335,–	138,–	1473,–
FWZ-200, painted	B	1397,–	138,–	1535,–
FWZ-200, galvanized	B	1376,–	138,–	1514,–

Fork Extensions Type GG	Category	Price	Freight charges	Price including freight charges
GG 80/40 (1600 mm long), painted	A	541,–	138,–	679,–
GG 80/40 (1800 mm long), painted	A	570,–	138,–	708,–
GG 80/40 (2000 mm long), painted	A	601,–	138,–	739,–
GG 100/40 (1600 mm long), painted	A	541,–	138,–	679,–
GG 100/40 (1800 mm long), painted	A	570,–	138,–	708,–
GG 100/40 (2000 mm long), painted	A	601,–	138,–	739,–
GG 100/45 (1600 mm long), painted	A	541,–	138,–	679,–
GG 100/45 (1800 mm long), painted	A	570,–	138,–	708,–
GG 100/45 (2000 mm long), painted	A	601,–	138,–	739,–
GG 100/50 (1600 mm long), painted	A	541,–	138,–	679,–
GG 100/50 (1800 mm long), painted	A	570,–	138,–	708,–
GG 100/50 (2000 mm long), painted	A	601,–	226,–	827,–
GG 120/40 (1600 mm long), painted	A	570,–	138,–	708,–
GG 120/40 (1800 mm long), painted	A	601,–	226,–	827,–
GG 120/40 (2000 mm long), painted	A	645,–	226,–	871,–
GG 120/50 (1600 mm long), painted	A	570,–	138,–	708,–
GG 120/50 (1800 mm long), painted	A	601,–	226,–	827,–
GG 120/50 (2000 mm long), painted	A	645,–	226,–	871,–
GG 125/45 (1600 mm long), painted	A	570,–	138,–	708,–
GG 125/45 (1800 mm long), painted	A	601,–	226,–	827,–
GG 125/45 (2000 mm long), painted	A	645,–	226,–	871,–

Prices in EUR, valid EXW DE-46354 Südlohn, DE-38820 Halberstadt, unpacked
Freight charges valid CPT Bulgaria, islands and oversea territories excluded

BAUER GmbH
Eichendorffstr. 62
46354 Südlohn, Germany

Tel. +49 2862 70 90
info@bauer-suedlohn.com
www.bauer-suedlohn.com

Geschäftsführer
Patrick Bauer, Pascal Bauer
Amtsgericht Coesfeld HRB 5259

TÜVNORD
TÜV NORD CERT GmbH
DIN EN ISO 9001
tuev-nord.de

Price List 0726 en-BG
Forklift Truck Attachments

Fork Extensions Type GG	Category	Price	Freight charges	Price including freight charges
GG 125/50 (1600 mm long), painted	A	570,–	138,–	708,–
GG 125/50 (1800 mm long), painted	A	601,–	226,–	827,–
GG 125/50 (2000 mm long), painted	A	645,–	226,–	871,–
GG 150/50 (1600 mm long), painted	A	634,–	226,–	860,–
GG 150/50 (1800 mm long), painted	A	680,–	226,–	906,–
GG 150/50 (2000 mm long), painted	A	713,–	226,–	939,–
GG 150/70 (1600 mm long), painted	A	634,–	226,–	860,–
GG 150/70 (1800 mm long), painted	A	680,–	226,–	906,–
GG 150/70 (2000 mm long), painted	A	713,–	226,–	939,–

Fork Extensions Type GO	Category	Price	Freight charges	Price including freight charges
GO 80/40 (1600 mm long), painted	A	390,–	138,–	528,–
GO 80/40 (1800 mm long), painted	A	396,–	138,–	534,–
GO 80/40 (2000 mm long), painted	A	411,–	138,–	549,–
GO 100/40 (1600 mm long), painted	A	390,–	138,–	528,–
GO 100/40 (1800 mm long), painted	A	396,–	138,–	534,–
GO 100/40 (2000 mm long), painted	A	411,–	138,–	549,–
GO 100/45 (1600 mm long), painted	A	390,–	138,–	528,–
GO 100/45 (1800 mm long), painted	A	396,–	138,–	534,–
GO 100/45 (2000 mm long), painted	A	411,–	138,–	549,–
GO 100/50 (1600 mm long), painted	A	390,–	138,–	528,–
GO 100/50 (1800 mm long), painted	A	396,–	138,–	534,–
GO 100/50 (2000 mm long), painted	A	411,–	138,–	549,–
GO 120/40 (1600 mm long), painted	A	396,–	138,–	534,–
GO 120/40 (1800 mm long), painted	A	418,–	138,–	556,–
GO 120/40 (2000 mm long), painted	A	435,–	138,–	573,–
GO 120/50 (1600 mm long), painted	A	396,–	138,–	534,–
GO 120/50 (1800 mm long), painted	A	418,–	138,–	556,–
GO 120/50 (2000 mm long), painted	A	435,–	138,–	573,–
GO 125/45 (1600 mm long), painted	A	396,–	138,–	534,–
GO 125/45 (1800 mm long), painted	A	418,–	138,–	556,–
GO 125/45 (2000 mm long), painted	A	435,–	138,–	573,–
GO 125/50 (1600 mm long), painted	A	396,–	138,–	534,–
GO 125/50 (1800 mm long), painted	A	418,–	138,–	556,–
GO 125/50 (2000 mm long), painted	A	435,–	138,–	573,–
GO 150/50 (1600 mm long), painted	A	475,–	138,–	613,–
GO 150/50 (1800 mm long), painted	A	516,–	138,–	654,–
GO 150/50 (2000 mm long), painted	A	555,–	138,–	693,–
GO 150/70 (1600 mm long), painted	A	475,–	138,–	613,–
GO 150/70 (1800 mm long), painted	A	516,–	138,–	654,–
GO 150/70 (2000 mm long), painted	A	555,–	138,–	693,–

Tilting Container Type GU	Category	Price	Freight charges	Price including freight charges
GU 300, painted	A	655,–	226,–	881,–
Lid, galvanized	A	98,–	18,–	116,–

Prices in EUR, valid EXW DE-46354 Südlohn, DE-38820 Halberstadt, unpacked
Freight charges valid CPT Bulgaria, islands and oversea territories excluded

BAUER GmbH
Eichendorffstr. 62
46354 Südlohn, Germany

Tel. +49 2862 70 90
info@bauer-suedlohn.com
www.bauer-suedlohn.com

Geschäftsführer
Patrick Bauer, Pascal Bauer
Amtsgericht Coesfeld HRB 5259

TÜVNORD
TÜV NORD CERT GmbH
DIN EN ISO 9001
tuev-nord.de

Price List 0726 en-BG
Forklift Truck Attachments

Tilting Container Type GU	Category	Price	Freight charges	Price including freight charges
Castor Set, polyamide, Load capacity 1350 kg / castor set	A	192,–	15,–	207,–
Skip Body Welded Oil and Watertight	A	78,–	0,–	78,–
Crane lifting eyes for use with a crane	A	106,–	8,–	114,–
Support legs, 100 mm ground leeway	A	70,–	8,–	78,–
GU 300, hot-dip galvanized	A	866,–	226,–	1092,–
Lid, galvanized	A	98,–	18,–	116,–
Castor Set, polyamide, Load capacity 1350 kg / castor set	A	192,–	15,–	207,–
Skip Body Welded Oil and Watertight	A	78,–	0,–	78,–
Crane lifting eyes for use with a crane	A	106,–	8,–	114,–
Support legs, 100 mm ground leeway	A	70,–	8,–	78,–
GU 500, painted	A	891,–	226,–	1117,–
Lid, galvanized	A	98,–	18,–	116,–
Castor Set, polyamide, Load capacity 1350 kg / castor set	A	192,–	15,–	207,–
Skip Body Welded Oil and Watertight	A	78,–	0,–	78,–
Adjustable dumping brake	A	464,–	10,–	474,–
Crane lifting eyes for use with a crane	A	106,–	8,–	114,–
Support legs, 100 mm ground leeway	A	70,–	8,–	78,–
GU 500, hot-dip galvanized	A	1160,–	226,–	1386,–
Lid, galvanized	A	98,–	18,–	116,–
Castor Set, polyamide, Load capacity 1350 kg / castor set	A	192,–	15,–	207,–
Skip Body Welded Oil and Watertight	A	78,–	0,–	78,–
Adjustable dumping brake	A	464,–	10,–	474,–
Crane lifting eyes for use with a crane	A	106,–	8,–	114,–
Support legs, 100 mm ground leeway	A	70,–	8,–	78,–
GU 750, painted	A	1052,–	226,–	1278,–
Lid, galvanized	A	139,–	26,–	165,–
Castor Set, polyamide, Load capacity 1350 kg / castor set	A	192,–	15,–	207,–
Skip Body Welded Oil and Watertight	A	78,–	0,–	78,–
Adjustable dumping brake	A	464,–	10,–	474,–
Crane lifting eyes for use with a crane	A	106,–	8,–	114,–
Support legs, 100 mm ground leeway	A	70,–	8,–	78,–
GU 750, hot-dip galvanized	A	1371,–	226,–	1597,–
Lid, galvanized	A	139,–	26,–	165,–
Castor Set, polyamide, Load capacity 1350 kg / castor set	A	192,–	15,–	207,–
Skip Body Welded Oil and Watertight	A	78,–	0,–	78,–
Adjustable dumping brake	A	464,–	10,–	474,–
Crane lifting eyes for use with a crane	A	106,–	8,–	114,–
Support legs, 100 mm ground leeway	A	70,–	8,–	78,–
GU 1000, painted	A	1163,–	226,–	1389,–
Lid, galvanized	A	192,–	27,–	219,–
Castor Set, polyamide, Load capacity 1350 kg / castor set	A	192,–	15,–	207,–
Skip Body Welded Oil and Watertight	A	121,–	0,–	121,–
Adjustable dumping brake	A	464,–	10,–	474,–
Crane lifting eyes for use with a crane	A	106,–	8,–	114,–
Support legs, 100 mm ground leeway	A	70,–	8,–	78,–
GU 1000, hot-dip galvanized	A	1647,–	331,–	1978,–

Prices in EUR, valid EXW DE-46354 Südlohn, DE-38820 Halberstadt, unpacked
Freight charges valid CPT Bulgaria, islands and oversea territories excluded

BAUER GmbH
Eichendorffstr. 62
46354 Südlohn, Germany

Tel. +49 2862 70 90
info@bauer-suedlohn.com
www.bauer-suedlohn.com

Geschäftsführer
Patrick Bauer, Pascal Bauer
Amtsgericht Coesfeld HRB 5259

TÜVNORD
TÜV NORD CERT GmbH
DIN EN ISO 9001
tuev-nord.de

Price List 0726 en-BG
Forklift Truck Attachments

Tilting Container Type GU	Category	Price	Freight charges	Price including freight charges
Lid, galvanized	A	192,–	27,–	219,–
Castor Set, polyamide, Load capacity 1350 kg / castor set	A	192,–	15,–	207,–
Skip Body Welded Oil and Watertight	A	121,–	0,–	121,–
Adjustable dumping brake	A	464,–	10,–	474,–
Crane lifting eyes for use with a crane	A	106,–	8,–	114,–
Support legs, 100 mm ground leeway	A	70,–	8,–	78,–
GU 1500, painted	A	1357,–	331,–	1688,–
Lid, galvanized	A	192,–	27,–	219,–
Castor Set, polyamide, Load capacity 1350 kg / castor set	A	192,–	15,–	207,–
Skip Body Welded Oil and Watertight	A	121,–	0,–	121,–
Adjustable dumping brake	A	464,–	10,–	474,–
Crane lifting eyes for use with a crane	A	106,–	8,–	114,–
Support legs, 100 mm ground leeway	A	70,–	8,–	78,–
GU 1500, hot-dip galvanized	A	1769,–	331,–	2100,–
Lid, galvanized	A	192,–	27,–	219,–
Castor Set, polyamide, Load capacity 1350 kg / castor set	A	192,–	15,–	207,–
Skip Body Welded Oil and Watertight	A	121,–	0,–	121,–
Adjustable dumping brake	A	464,–	10,–	474,–
Crane lifting eyes for use with a crane	A	106,–	8,–	114,–
Support legs, 100 mm ground leeway	A	70,–	8,–	78,–
GU 2000, painted	A	1675,–	331,–	2006,–
Lid, galvanized	A	226,–	32,–	258,–
Castor Set, polyamide, Load capacity 1350 kg / castor set	A	192,–	15,–	207,–
Skip Body Welded Oil and Watertight	A	121,–	0,–	121,–
Adjustable dumping brake	A	464,–	10,–	474,–
Crane lifting eyes for use with a crane	A	106,–	8,–	114,–
Support legs, 100 mm ground leeway	A	70,–	8,–	78,–
GU 2000, hot-dip galvanized	A	2200,–	331,–	2531,–
Lid, galvanized	A	226,–	32,–	258,–
Castor Set, polyamide, Load capacity 1350 kg / castor set	A	192,–	15,–	207,–
Skip Body Welded Oil and Watertight	A	121,–	0,–	121,–
Adjustable dumping brake	A	464,–	10,–	474,–
Crane lifting eyes for use with a crane	A	106,–	8,–	114,–
Support legs, 100 mm ground leeway	A	70,–	8,–	78,–

Swarf Tilting Container Type GU-E	Category	Price	Freight charges	Price including freight charges
GU-E 300, painted	A	775,–	226,–	1001,–
Lid, galvanized	A	98,–	18,–	116,–
Castor Set, polyamide, Load capacity 1350 kg / castor set	A	192,–	15,–	207,–
Crane lifting eyes for use with a crane	A	106,–	8,–	114,–
Support legs, 100 mm ground leeway	A	70,–	8,–	78,–
GU-E 300, hot-dip galvanized	A	986,–	226,–	1212,–
Lid, galvanized	A	98,–	18,–	116,–
Castor Set, polyamide, Load capacity 1350 kg / castor set	A	192,–	15,–	207,–
Crane lifting eyes for use with a crane	A	106,–	8,–	114,–
Support legs, 100 mm ground leeway	A	70,–	8,–	78,–

Prices in EUR, valid EXW DE-46354 Südlohn, DE-38820 Halberstadt, unpacked
Freight charges valid CPT Bulgaria, islands and oversea territories excluded

BAUER GmbH
Eichendorffstr. 62
46354 Südlohn, Germany

Tel. +49 2862 70 90
info@bauer-suedlohn.com
www.bauer-suedlohn.com

Geschäftsführer
Patrick Bauer, Pascal Bauer
Amtsgericht Coesfeld HRB 5259

TÜVNORD
TÜV NORD CERT GmbH
DIN EN ISO 9001
tuev-nord.de

Price List 0726 en-BG
Forklift Truck Attachments

Swarf Tilting Container Type GU-E	Category	Price	Freight charges	Price including freight charges
GU-E 500, painted	A	1012,–	226,–	1238,–
Lid, galvanized	A	98,–	18,–	116,–
Castor Set, polyamide, Load capacity 1350 kg / castor set	A	192,–	15,–	207,–
Adjustable dumping brake	A	464,–	10,–	474,–
Crane lifting eyes for use with a crane	A	106,–	8,–	114,–
Support legs, 100 mm ground leeway	A	70,–	8,–	78,–
GU-E 500, hot-dip galvanized	A	1280,–	226,–	1506,–
Lid, galvanized	A	98,–	18,–	116,–
Castor Set, polyamide, Load capacity 1350 kg / castor set	A	192,–	15,–	207,–
Adjustable dumping brake	A	464,–	10,–	474,–
Crane lifting eyes for use with a crane	A	106,–	8,–	114,–
Support legs, 100 mm ground leeway	A	70,–	8,–	78,–
GU-E 750, painted	A	1172,–	226,–	1398,–
Lid, galvanized	A	139,–	26,–	165,–
Castor Set, polyamide, Load capacity 1350 kg / castor set	A	192,–	15,–	207,–
Adjustable dumping brake	A	464,–	10,–	474,–
Crane lifting eyes for use with a crane	A	106,–	8,–	114,–
Support legs, 100 mm ground leeway	A	70,–	8,–	78,–
GU-E 750, hot-dip galvanized	A	1491,–	226,–	1717,–
Lid, galvanized	A	139,–	26,–	165,–
Castor Set, polyamide, Load capacity 1350 kg / castor set	A	192,–	15,–	207,–
Adjustable dumping brake	A	464,–	10,–	474,–
Crane lifting eyes for use with a crane	A	106,–	8,–	114,–
Support legs, 100 mm ground leeway	A	70,–	8,–	78,–
GU-E 1000, painted	A	1325,–	226,–	1551,–
Lid, galvanized	A	192,–	27,–	219,–
Castor Set, polyamide, Load capacity 1350 kg / castor set	A	192,–	15,–	207,–
Adjustable dumping brake	A	464,–	10,–	474,–
Crane lifting eyes for use with a crane	A	106,–	8,–	114,–
Support legs, 100 mm ground leeway	A	70,–	8,–	78,–
GU-E 1000, hot-dip galvanized	A	1810,–	331,–	2141,–
Lid, galvanized	A	192,–	27,–	219,–
Castor Set, polyamide, Load capacity 1350 kg / castor set	A	192,–	15,–	207,–
Adjustable dumping brake	A	464,–	10,–	474,–
Crane lifting eyes for use with a crane	A	106,–	8,–	114,–
Support legs, 100 mm ground leeway	A	70,–	8,–	78,–
GU-E 1500, painted	A	1520,–	331,–	1851,–
Lid, galvanized	A	192,–	27,–	219,–
Castor Set, polyamide, Load capacity 1350 kg / castor set	A	192,–	15,–	207,–
Adjustable dumping brake	A	464,–	10,–	474,–
Crane lifting eyes for use with a crane	A	106,–	8,–	114,–
Support legs, 100 mm ground leeway	A	70,–	8,–	78,–
GU-E 1500, hot-dip galvanized	A	1932,–	331,–	2263,–
Lid, galvanized	A	192,–	27,–	219,–
Castor Set, polyamide, Load capacity 1350 kg / castor set	A	192,–	15,–	207,–
Adjustable dumping brake	A	464,–	10,–	474,–

Prices in EUR, valid EXW DE-46354 Südlohn, DE-38820 Halberstadt, unpacked
Freight charges valid CPT Bulgaria, islands and oversea territories excluded

BAUER GmbH
Eichendorffstr. 62
46354 Südlohn, Germany

Tel. +49 2862 70 90
info@bauer-suedlohn.com
www.bauer-suedlohn.com

Geschäftsführer
Patrick Bauer, Pascal Bauer
Amtsgericht Coesfeld HRB 5259

TÜVNORD
TÜV NORD CERT GmbH
DIN EN ISO 9001
tuev-nord.de

Price List 0726 en-BG
Forklift Truck Attachments

Swarf Tilting Container Type GU-E	Category	Price	Freight charges	Price including freight charges
Crane lifting eyes for use with a crane	A	106,–	8,–	114,–
Support legs, 100 mm ground leeway	A	70,–	8,–	78,–
GU-E 2000, painted	A	1838,–	331,–	2169,–
Lid, galvanized	A	226,–	32,–	258,–
Castor Set, polyamide, Load capacity 1350 kg / castor set	A	192,–	15,–	207,–
Adjustable dumping brake	A	464,–	10,–	474,–
Crane lifting eyes for use with a crane	A	106,–	8,–	114,–
Support legs, 100 mm ground leeway	A	70,–	8,–	78,–
GU-E 2000, hot-dip galvanized	A	2362,–	331,–	2693,–
Lid, galvanized	A	226,–	32,–	258,–
Castor Set, polyamide, Load capacity 1350 kg / castor set	A	192,–	15,–	207,–
Adjustable dumping brake	A	464,–	10,–	474,–
Crane lifting eyes for use with a crane	A	106,–	8,–	114,–
Support legs, 100 mm ground leeway	A	70,–	8,–	78,–

Tilting Container Type GU-RZ	Category	Price	Freight charges	Price including freight charges
GU-RZ 30, painted	A	699,–	226,–	925,–
Lid, galvanized	A	95,–	18,–	113,–
GU-RZ 30, hot-dip galvanized	A	779,–	226,–	1005,–
Lid, galvanized	A	95,–	18,–	113,–
GU-RZ 55, painted	A	931,–	226,–	1157,–
Lid, galvanized	A	95,–	18,–	113,–
GU-RZ 55, hot-dip galvanized	A	1026,–	226,–	1252,–
Lid, galvanized	A	95,–	18,–	113,–

Fork Protection Type GZS	Category	Price	Freight charges	Price including freight charges
GZS, painted	F	179,–	118,–	297,–

Container With Drop Away Base Type HKB	Category	Price	Freight charges	Price including freight charges
HKB 60, painted	A	1078,–	226,–	1304,–
HKB 70, painted	A	1140,–	226,–	1366,–
HKB 90, painted	A	1417,–	226,–	1643,–

Shovel Type HVR	Category	Price	Freight charges	Price including freight charges
HVR 50, painted	A	3393,–	331,–	3724,–
HVR 75, painted	A	3976,–	402,–	4378,–
HVR 80 L, painted	A	4095,–	402,–	4497,–
HVR 100, painted	A	5033,–	582,–	5615,–
HVR 150, painted	A	6432,–	582,–	7014,–

Kippomat Type KG-A	Category	Price	Freight charges	Price including freight charges
KG-A, hot-dip galvanized	A	3218,–	331,–	3549,–

Kippomat Type KG-B	Category	Price	Freight charges	Price including freight charges
KG-B, hot-dip galvanized	A	3137,–	331,–	3468,–

Prices in EUR, valid EXW DE-46354 Südlohn, DE-38820 Halberstadt, unpacked
Freight charges valid CPT Bulgaria, islands and oversea territories excluded

BAUER GmbH
Eichendorffstr. 62
46354 Südlohn, Germany

Tel. +49 2862 70 90
info@bauer-suedlohn.com
www.bauer-suedlohn.com

Geschäftsführer
Patrick Bauer, Pascal Bauer
Amtsgericht Coesfeld HRB 5259

TÜVNORD
TÜV NORD CERT GmbH
DIN EN ISO 9001
tuev-nord.de

Price List 0726 en-BG
Forklift Truck Attachments

Kippomat Type KG-C	Category	Price	Freight charges	Price including freight charges
KG-C, hot-dip galvanized	A	2081,–	226,–	2307,–

Tipping Skip Type KK	Category	Price	Freight charges	Price including freight charges
KK 250, painted	E	484,–	138,–	622,–
Lid, galvanized	E	136,–	15,–	151,–
Castor Set, polyamide, Load capacity 1050 kg / castor set	A	136,–	15,–	151,–
Castor Set, solid rubber, Load capacity 615 kg / castor set	E	103,–	15,–	118,–
KK 250, hot-dip galvanized	E	534,–	138,–	672,–
Lid, galvanized	E	136,–	15,–	151,–
Castor Set, polyamide, Load capacity 1050 kg / castor set	A	136,–	15,–	151,–
Castor Set, solid rubber, Load capacity 615 kg / castor set	E	103,–	15,–	118,–
KK 400, painted	E	551,–	138,–	689,–
Lid, galvanized	E	156,–	16,–	172,–
Castor Set, polyamide, Load capacity 1050 kg / castor set	A	136,–	15,–	151,–
Castor Set, solid rubber, Load capacity 615 kg / castor set	E	103,–	15,–	118,–
KK 400, hot-dip galvanized	E	600,–	138,–	738,–
Lid, galvanized	E	156,–	16,–	172,–
Castor Set, polyamide, Load capacity 1050 kg / castor set	A	136,–	15,–	151,–
Castor Set, solid rubber, Load capacity 615 kg / castor set	E	103,–	15,–	118,–
KK 600, painted	E	764,–	226,–	990,–
Lid, galvanized	E	173,–	20,–	193,–
Castor Set, polyamide, Load capacity 1050 kg / castor set	A	136,–	15,–	151,–
Castor Set, solid rubber, Load capacity 615 kg / castor set	E	103,–	15,–	118,–
KK 600, hot-dip galvanized	E	865,–	226,–	1091,–
Castor Set, solid rubber, Load capacity 615 kg / castor set	E	103,–	15,–	118,–
Lid, galvanized	E	173,–	20,–	193,–
Castor Set, polyamide, Load capacity 1050 kg / castor set	A	136,–	15,–	151,–
KK 800, painted	E	823,–	226,–	1049,–
Lid, galvanized	E	181,–	21,–	202,–
Castor Set, polyamide, Load capacity 1050 kg / castor set	A	136,–	15,–	151,–
Castor Set, solid rubber, Load capacity 615 kg / castor set	E	103,–	15,–	118,–
KK 800, hot-dip galvanized	E	930,–	226,–	1156,–
Lid, galvanized	E	181,–	21,–	202,–
Castor Set, polyamide, Load capacity 1050 kg / castor set	A	136,–	15,–	151,–
Castor Set, solid rubber, Load capacity 615 kg / castor set	E	103,–	15,–	118,–
KK 1000, painted	E	881,–	226,–	1107,–
Lid, galvanized	E	193,–	22,–	215,–
Castor Set, polyamide, Load capacity 1050 kg / castor set	A	136,–	15,–	151,–
Castor Set, solid rubber, Load capacity 615 kg / castor set	E	103,–	15,–	118,–
KK 1000, hot-dip galvanized	E	1014,–	226,–	1240,–
Lid, galvanized	E	193,–	22,–	215,–
Castor Set, polyamide, Load capacity 1050 kg / castor set	A	136,–	15,–	151,–
Castor Set, solid rubber, Load capacity 615 kg / castor set	E	103,–	15,–	118,–

Prices in EUR, valid EXW DE-46354 Südlohn, DE-38820 Halberstadt, unpacked
Freight charges valid CPT Bulgaria, islands and oversea territories excluded

BAUER GmbH
Eichendorffstr. 62
46354 Südlohn, Germany

Tel. +49 2862 70 90
info@bauer-suedlohn.com
www.bauer-suedlohn.com

Geschäftsführer
Patrick Bauer, Pascal Bauer
Amtsgericht Coesfeld HRB 5259

TÜVNORD
TÜV NORD CERT GmbH
DIN EN ISO 9001
tuev-nord.de

Price List 0726 en-BG
Forklift Truck Attachments

Kippomat Type KM	Category	Price	Freight charges	Price including freight charges
KM, hot-dip galvanized	A	3218,–	226,–	3444,–

Tipping Skip Type KN	Category	Price	Freight charges	Price including freight charges
KN 250, painted	E	484,–	138,–	622,–
Lid, galvanized	E	136,–	15,–	151,–
Castor Set, polyamide, Load capacity 1050 kg / castor set	A	136,–	15,–	151,–
Castor Set, solid rubber, Load capacity 615 kg / castor set	E	103,–	15,–	118,–
KN 250, hot-dip galvanized	E	534,–	138,–	672,–
Lid, galvanized	E	136,–	15,–	151,–
Castor Set, polyamide, Load capacity 1050 kg / castor set	A	136,–	15,–	151,–
Castor Set, solid rubber, Load capacity 615 kg / castor set	E	103,–	15,–	118,–
KN 400, painted	E	551,–	138,–	689,–
Lid, galvanized	E	156,–	16,–	172,–
Castor Set, polyamide, Load capacity 1050 kg / castor set	A	136,–	15,–	151,–
Castor Set, solid rubber, Load capacity 615 kg / castor set	E	103,–	15,–	118,–
KN 400, hot-dip galvanized	E	600,–	138,–	738,–
Lid, galvanized	E	156,–	16,–	172,–
Castor Set, polyamide, Load capacity 1050 kg / castor set	A	136,–	15,–	151,–
Castor Set, solid rubber, Load capacity 615 kg / castor set	E	103,–	15,–	118,–

Tipping Skip Type KS	Category	Price	Freight charges	Price including freight charges
KS 400, painted	E	900,–	226,–	1126,–
KS 550, painted	E	964,–	226,–	1190,–
KS 700, painted	E	1024,–	226,–	1250,–

Extensible Crane Arm Type KT	Category	Price	Freight charges	Price including freight charges
KT 2,5, painted	A	1448,–	226,–	1674,–
KT 2,5, hot-dip galvanized	A	1763,–	331,–	2094,–
KT 5,0, painted	A	1798,–	331,–	2129,–
KT 5,0, hot-dip galvanized	A	2242,–	331,–	2573,–

Extensible Crane Arm Type KTH	Category	Price	Freight charges	Price including freight charges
KTH 2,5, painted	A	1748,–	331,–	2079,–
KTH 2,5, hot-dip galvanized	A	2068,–	331,–	2399,–
KTH 5,0, painted	A	2012,–	331,–	2343,–
KTH 5,0, hot-dip galvanized	A	2373,–	331,–	2704,–

Extensible Crane Arm Type KTH-K	Category	Price	Freight charges	Price including freight charges
KTH-K 2,5, painted	A	1606,–	226,–	1832,–
KTH-K 2,5, hot-dip galvanized	A	1943,–	226,–	2169,–
KTH-K 5,0, painted	A	1852,–	226,–	2078,–
KTH-K 5,0, hot-dip galvanized	A	2232,–	331,–	2563,–

Extensible Crane Arm Type KT-K	Category	Price	Freight charges	Price including freight charges
KT-K 2,5, painted	A	1291,–	226,–	1517,–

Prices in EUR, valid EXW DE-46354 Südlohn, DE-38820 Halberstadt, unpacked
Freight charges valid CPT Bulgaria, islands and oversea territories excluded

BAUER GmbH
Eichendorffstr. 62
46354 Südlohn, Germany

Tel. +49 2862 70 90
info@bauer-suedlohn.com
www.bauer-suedlohn.com

Geschäftsführer
Patrick Bauer, Pascal Bauer
Amtsgericht Coesfeld HRB 5259

TÜVNORD
TÜV NORD CERT GmbH
DIN EN ISO 9001
tuev-nord.de

Price List 0726 en-BG
Forklift Truck Attachments

Extensible Crane Arm Type KT-K	Category	Price	Freight charges	Price including freight charges
KT-K 2,5, hot-dip galvanized	A	1622,–	226,–	1848,–
KT-K 5,0, painted	A	1625,–	226,–	1851,–
KT-K 5,0, hot-dip galvanized	A	2092,–	226,–	2318,–

Barrow Tipper Type KW-ET	Category	Price	Freight charges	Price including freight charges
KW-ET 250, painted	E	588,–	138,–	726,–
Lid, galvanized	E	136,–	15,–	151,–
KW-ET 250, hot-dip galvanized	E	900,–	138,–	1038,–
Lid, galvanized	E	136,–	15,–	151,–
KW-ET 400, painted	E	648,–	138,–	786,–
Lid, galvanized	E	156,–	16,–	172,–
KW-ET 400, hot-dip galvanized	E	998,–	138,–	1136,–
Lid, galvanized	E	156,–	16,–	172,–
KW-ET 600, painted	E	808,–	226,–	1034,–
Lid, galvanized	E	173,–	20,–	193,–
KW-ET 600, hot-dip galvanized	E	1166,–	226,–	1392,–
Lid, galvanized	E	173,–	20,–	193,–
KW-ET 1000, painted	E	997,–	226,–	1223,–
Lid, galvanized	E	193,–	22,–	215,–
KW-ET 1000, hot-dip galvanized	E	1591,–	226,–	1817,–
Lid, galvanized	E	193,–	22,–	215,–

Loading Arm Type LA	Category	Price	Freight charges	Price including freight charges
LA 1600-1,0, painted	A	542,–	138,–	680,–
LA 1600-1,0, hot-dip galvanized	A	581,–	138,–	719,–
LA 1600-2,5, painted	A	786,–	138,–	924,–
LA 1600-2,5, hot-dip galvanized	A	927,–	138,–	1065,–
LA 1600-5,0, painted	A	1133,–	226,–	1359,–
LA 1600-5,0, hot-dip galvanized	A	1325,–	226,–	1551,–
LA 2400-1,0, painted	A	569,–	138,–	707,–
LA 2400-1,0, hot-dip galvanized	A	632,–	138,–	770,–
LA 2400-2,5, painted	A	877,–	226,–	1103,–
LA 2400-2,5, hot-dip galvanized	A	1017,–	226,–	1243,–
LA 2400-5,0, painted	A	1250,–	226,–	1476,–
LA 2400-5,0, hot-dip galvanized	A	1480,–	226,–	1706,–
LA 25-1,0, painted	A	632,–	138,–	770,–
LA 25-1,0, hot-dip galvanized	A	683,–	138,–	821,–

Loading Arm Type LAT	Category	Price	Freight charges	Price including freight charges
LAT 25-1,0, painted	A	766,–	138,–	904,–
LAT 25-1,0, hot-dip galvanized	A	838,–	138,–	976,–

Scissor Gripper Type LG	Category	Price	Freight charges	Price including freight charges
LG 60, painted	B	245,–	118,–	363,–
LG 60, galvanized	B	223,–	118,–	341,–

Prices in EUR, valid EXW DE-46354 Südlohn, DE-38820 Halberstadt, unpacked
Freight charges valid CPT Bulgaria, islands and oversea territories excluded

BAUER GmbH
Eichendorffstr. 62
46354 Südlohn, Germany

Tel. +49 2862 70 90
info@bauer-suedlohn.com
www.bauer-suedlohn.com

Geschäftsführer
Patrick Bauer, Pascal Bauer
Amtsgericht Coesfeld HRB 5259

TÜVNORD
TÜV NORD CERT GmbH
DIN EN ISO 9001
tuev-nord.de

Price List 0726 en-BG
Forklift Truck Attachments

Scissor Gripper Type LG	Category	Price	Freight charges	Price including freight charges
LG 200, painted	B	245,–	118,–	363,–
LG 200, galvanized	B	223,–	118,–	341,–

Container for Long Material Type LGK	Category	Price	Freight charges	Price including freight charges
LGK, painted	A	1376,–	226,–	1602,–
Castor Set, polyamide, Load capacity 1350 kg / castor set	A	192,–	15,–	207,–
LGK, hot-dip galvanized	A	1676,–	226,–	1902,–
Castor Set, polyamide, Load capacity 1350 kg / castor set	A	192,–	15,–	207,–

Long Material Carrier Type LGT	Category	Price	Freight charges	Price including freight charges
LGT 1,5, painted	A	1929,–	331,–	2260,–
LGT 1,5, hot-dip galvanized	A	2263,–	331,–	2594,–
LGT 2,5, painted	A	2164,–	on request	on request
LGT 2,5, hot-dip galvanized	A	2590,–	on request	on request
LGT 3,5, painted	A	2989,–	on request	on request
LGT 3,5, hot-dip galvanized	A	3670,–	on request	on request
LGT 4,5, painted	A	3302,–	on request	on request
LGT 4,5, hot-dip galvanized	A	4071,–	on request	on request

Drum Claw Type LGZ	Category	Price	Freight charges	Price including freight charges
LGZ 60, painted	B	225,–	118,–	343,–
LGZ 60, galvanized	B	211,–	118,–	329,–
LGZ 200, painted	B	225,–	118,–	343,–
LGZ 200, galvanized	B	211,–	118,–	329,–

Crane Hook Type LH	Category	Price	Freight charges	Price including freight charges
LH-I 1,0, painted	A	199,–	118,–	317,–
LH-I 1,0, hot-dip galvanized	A	223,–	118,–	341,–
LH-I 1,5, painted	A	218,–	118,–	336,–
LH-I 1,5, hot-dip galvanized	A	242,–	118,–	360,–
LH-I 2,0, painted	A	229,–	118,–	347,–
LH-I 2,0, hot-dip galvanized	A	254,–	118,–	372,–
LH-I 2,5, painted	A	255,–	118,–	373,–
LH-I 2,5, hot-dip galvanized	A	279,–	118,–	397,–
LH-I 3,0, painted	A	331,–	118,–	449,–
LH-I 3,0, hot-dip galvanized	A	356,–	118,–	474,–
LH-II 1,5, painted	A	329,–	118,–	447,–
LH-II 1,5, hot-dip galvanized	A	378,–	118,–	496,–
LH-II 2,5, painted	A	434,–	118,–	552,–
LH-II 2,5, hot-dip galvanized	A	516,–	118,–	634,–
LH-II 5,0, painted	A	720,–	138,–	858,–
LH-II 5,0, hot-dip galvanized	A	808,–	138,–	946,–
LH-II 7,5, painted	A	856,–	138,–	994,–
LH-II 7,5, hot-dip galvanized	A	949,–	138,–	1087,–

Prices in EUR, valid EXW DE-46354 Südlohn, DE-38820 Halberstadt, unpacked
Freight charges valid CPT Bulgaria, islands and oversea territories excluded

BAUER GmbH
Eichendorffstr. 62
46354 Südlohn, Germany

Tel. +49 2862 70 90
info@bauer-suedlohn.com
www.bauer-suedlohn.com

Geschäftsführer
Patrick Bauer, Pascal Bauer
Amtsgericht Coesfeld HRB 5259

TÜVNORD
TÜV NORD CERT GmbH
DIN EN ISO 9001
tuev-nord.de

Price List 0726 en-BG
Forklift Truck Attachments

Long Load Handler Type LSL	Category	Price	Freight charges	Price including freight charges
LSL, painted	A	1141,–	226,–	1367,–
LSL, hot-dip galvanized	A	1310,–	226,–	1536,–

Long Material Sidecar Type LSW	Category	Price	Freight charges	Price including freight charges
LSW 1,3, painted	A	953,–	138,–	1091,–
LSW 1,3, hot-dip galvanized	A	1017,–	226,–	1243,–
LSW 2,5, painted	A	1132,–	138,–	1270,–
LSW 2,5, hot-dip galvanized	A	1197,–	226,–	1423,–

Access Safety Platform Type MB-B	Category	Price	Freight charges	Price including freight charges
MB-B, painted	A	1085,–	226,–	1311,–
Castor Set, polyamide, Load capacity 1050 kg / castor set	A	136,–	15,–	151,–

Access Safety Platform Type MB-B/L	Category	Price	Freight charges	Price including freight charges
MB-B/L, painted	A	1274,–	226,–	1500,–
Castor Set, polyamide, Load capacity 1050 kg / castor set	A	136,–	15,–	151,–

Access Safety Platform Type MB-D	Category	Price	Freight charges	Price including freight charges
MB-D, painted	A	908,–	226,–	1134,–
Castor Set, polyamide, Load capacity 1050 kg / castor set	A	136,–	15,–	151,–

Access Safety Platform Type MB-D/L	Category	Price	Freight charges	Price including freight charges
MB-D/L, painted	A	1096,–	226,–	1322,–
Castor Set, polyamide, Load capacity 1050 kg / castor set	A	136,–	15,–	151,–

Access Safety Platform Type MB-F	Category	Price	Freight charges	Price including freight charges
MB-F, painted	A	1074,–	226,–	1300,–
Castor Set, polyamide, Load capacity 1050 kg / castor set	A	136,–	15,–	151,–

Access Safety Platform Type MB-II	Category	Price	Freight charges	Price including freight charges
MB-II, painted	A	994,–	226,–	1220,–
Castor Set, polyamide, Load capacity 1050 kg / castor set	A	136,–	15,–	151,–
MB-II, hot-dip galvanized	A	1171,–	226,–	1397,–
Castor Set, polyamide, Load capacity 1050 kg / castor set	A	136,–	15,–	151,–

Access Safety Platform Type MB-K-IV	Category	Price	Freight charges	Price including freight charges
MB-K-IV, painted	A	2012,–	280,–	2292,–

Access Safety Platform Type MB-ST	Category	Price	Freight charges	Price including freight charges
MB-ST, painted	A	2576,–	226,–	2802,–
Castor Set, polyamide, Load capacity 1050 kg / castor set	A	136,–	15,–	151,–

Access Safety Platform Type MB-ST/L	Category	Price	Freight charges	Price including freight charges
MB-ST/L, painted	A	2764,–	226,–	2990,–

Prices in EUR, valid EXW DE-46354 Südlohn, DE-38820 Halberstadt, unpacked
Freight charges valid CPT Bulgaria, islands and oversea territories excluded

BAUER GmbH
Eichendorffstr. 62
46354 Südlohn, Germany

Tel. +49 2862 70 90
info@bauer-suedlohn.com
www.bauer-suedlohn.com

Geschäftsführer
Patrick Bauer, Pascal Bauer
Amtsgericht Coesfeld HRB 5259

TÜVNORD
TÜV NORD CERT GmbH
DIN EN ISO 9001
tuev-nord.de

Price List 0726 en-BG
Forklift Truck Attachments

Access Safety Platform Type MB-ST/L	Category	Price	Freight charges	Price including freight charges
Castor Set, polyamide, Load capacity 1050 kg / castor set	A	136,–	15,–	151,–

Access Safety Platform Type MB-ST/T	Category	Price	Freight charges	Price including freight charges
MB-ST/T, painted	A	2903,–	226,–	3129,–
Castor Set, polyamide, Load capacity 1050 kg / castor set	A	136,–	15,–	151,–

Access Safety Platform Type MB-ST/T/L	Category	Price	Freight charges	Price including freight charges
MB-ST/T/L, painted	A	3092,–	226,–	3318,–
Castor Set, polyamide, Load capacity 1050 kg / castor set	A	136,–	15,–	151,–

Mini Tilting Container Type MGU	Category	Price	Freight charges	Price including freight charges
MGU 230, painted	A	569,–	138,–	707,–
Lid, galvanized	A	131,–	18,–	149,–
Castor Set, polyamide, Load capacity 1050 kg / castor set	A	156,–	15,–	171,–
Skip Body Welded Oil and Watertight	A	78,–	0,–	78,–
MGU 230, hot-dip galvanized	A	655,–	226,–	881,–
Lid, galvanized	A	131,–	18,–	149,–
Castor Set, polyamide, Load capacity 1050 kg / castor set	A	156,–	15,–	171,–
Skip Body Welded Oil and Watertight	A	78,–	0,–	78,–
MGU 270, painted	A	621,–	226,–	847,–
Lid, galvanized	A	131,–	18,–	149,–
Castor Set, polyamide, Load capacity 1050 kg / castor set	A	156,–	15,–	171,–
Skip Body Welded Oil and Watertight	A	78,–	0,–	78,–
MGU 270, hot-dip galvanized	A	729,–	226,–	955,–
Lid, galvanized	A	131,–	18,–	149,–
Castor Set, polyamide, Load capacity 1050 kg / castor set	A	156,–	15,–	171,–
Skip Body Welded Oil and Watertight	A	78,–	0,–	78,–
MGU 460, painted	A	815,–	226,–	1041,–
Lid, galvanized	A	169,–	22,–	191,–
Castor Set, polyamide, Load capacity 1050 kg / castor set	A	156,–	15,–	171,–
Skip Body Welded Oil and Watertight	A	78,–	0,–	78,–
MGU 460, hot-dip galvanized	A	967,–	226,–	1193,–
Lid, galvanized	A	169,–	22,–	191,–
Castor Set, polyamide, Load capacity 1050 kg / castor set	A	156,–	15,–	171,–
Skip Body Welded Oil and Watertight	A	78,–	0,–	78,–
MGU 610, painted	A	919,–	226,–	1145,–
Lid, galvanized	A	181,–	26,–	207,–
Castor Set, polyamide, Load capacity 1050 kg / castor set	A	156,–	15,–	171,–
Skip Body Welded Oil and Watertight	A	78,–	0,–	78,–
MGU 610, hot-dip galvanized	A	1089,–	226,–	1315,–
Lid, galvanized	A	181,–	26,–	207,–
Castor Set, polyamide, Load capacity 1050 kg / castor set	A	156,–	15,–	171,–
Skip Body Welded Oil and Watertight	A	78,–	0,–	78,–

Prices in EUR, valid EXW DE-46354 Südlohn, DE-38820 Halberstadt, unpacked
Freight charges valid CPT Bulgaria, islands and oversea territories excluded

BAUER GmbH
Eichendorffstr. 62
46354 Südlohn, Germany

Tel. +49 2862 70 90
info@bauer-suedlohn.com
www.bauer-suedlohn.com

Geschäftsführer
Patrick Bauer, Pascal Bauer
Amtsgericht Coesfeld HRB 5259

TÜVNORD
TÜV NORD CERT GmbH
DIN EN ISO 9001
tuev-nord.de

Price List 0726 en-BG
Forklift Truck Attachments

Wheelie Bin Jack Type MH	Category	Price	Freight charges	Price including freight charges
MH-I, painted	A	657,–	138,–	795,–
MH-II, painted	A	725,–	138,–	863,–
MH-III, painted	A	784,–	138,–	922,–

Wheelie Bin Tipper Type MK	Category	Price	Freight charges	Price including freight charges
MK 120, painted	A	1273,–	138,–	1411,–
MK 240, painted	A	1273,–	138,–	1411,–

Wheelie Bin Tipper Type MK-H	Category	Price	Freight charges	Price including freight charges
MK-H 120, painted	A	1902,–	138,–	2040,–
MK-H 240, painted	A	1902,–	226,–	2128,–

Mini Container With Drop Away Base Type MSB	Category	Price	Freight charges	Price including freight charges
MSB 150, painted	A	636,–	138,–	774,–
Castor Set, polyamide, Load capacity 1050 kg / castor set	A	156,–	15,–	171,–
Guiding Plates, galvanized	A	73,–	12,–	85,–
MSB 150, hot-dip galvanized	A	746,–	138,–	884,–
Castor Set, polyamide, Load capacity 1050 kg / castor set	A	156,–	15,–	171,–
Guiding Plates, galvanized	A	73,–	12,–	85,–
MSB 250, painted	A	690,–	138,–	828,–
Castor Set, polyamide, Load capacity 1050 kg / castor set	A	156,–	15,–	171,–
Guiding Plates, galvanized	A	73,–	12,–	85,–
MSB 250, hot-dip galvanized	A	826,–	138,–	964,–
Castor Set, polyamide, Load capacity 1050 kg / castor set	A	156,–	15,–	171,–
Guiding Plates, galvanized	A	73,–	12,–	85,–
MSB 400, painted	A	850,–	138,–	988,–
Castor Set, polyamide, Load capacity 1050 kg / castor set	A	156,–	15,–	171,–
Guiding Plates, galvanized	A	73,–	12,–	85,–
MSB 400, hot-dip galvanized	A	1018,–	226,–	1244,–
Castor Set, polyamide, Load capacity 1050 kg / castor set	A	156,–	15,–	171,–
Guiding Plates, galvanized	A	73,–	12,–	85,–

Tilting Container Type NK	Category	Price	Freight charges	Price including freight charges
NK 30, painted	A	700,–	226,–	926,–
Lid, galvanized	A	98,–	15,–	113,–
Castor Set, polyamide, Load capacity 1350 kg / castor set	A	192,–	15,–	207,–
Skip Body Welded Oil and Watertight	A	78,–	0,–	78,–
NK 30, hot-dip galvanized	A	984,–	226,–	1210,–
Lid, galvanized	A	98,–	15,–	113,–
Castor Set, polyamide, Load capacity 1350 kg / castor set	A	192,–	15,–	207,–
Skip Body Welded Oil and Watertight	A	78,–	0,–	78,–
NK 50, painted	A	984,–	226,–	1210,–
Lid, galvanized	A	98,–	18,–	116,–
Castor Set, polyamide, Load capacity 1350 kg / castor set	A	192,–	15,–	207,–
Skip Body Welded Oil and Watertight	A	78,–	0,–	78,–

Prices in EUR, valid EXW DE-46354 Südlohn, DE-38820 Halberstadt, unpacked
Freight charges valid CPT Bulgaria, islands and oversea territories excluded

BAUER GmbH
Eichendorffstr. 62
46354 Südlohn, Germany

Tel. +49 2862 70 90
info@bauer-suedlohn.com
www.bauer-suedlohn.com

Geschäftsführer
Patrick Bauer, Pascal Bauer
Amtsgericht Coesfeld HRB 5259

TÜVNORD
TÜV NORD CERT GmbH
DIN EN ISO 9001
tuev-nord.de

Price List 0726 en-BG
Forklift Truck Attachments

Tilting Container Type NK	Category	Price	Freight charges	Price including freight charges
NK 50, hot-dip galvanized	A	1327,–	226,–	1553,–
Lid, galvanized	A	98,–	18,–	116,–
Castor Set, polyamide, Load capacity 1350 kg / castor set	A	192,–	15,–	207,–
Skip Body Welded Oil and Watertight	A	78,–	0,–	78,–
NK 75, painted	A	1115,–	331,–	1446,–
Lid, galvanized	A	142,–	22,–	164,–
Castor Set, polyamide, Load capacity 1350 kg / castor set	A	192,–	15,–	207,–
Skip Body Welded Oil and Watertight	A	78,–	0,–	78,–
NK 75, hot-dip galvanized	A	1743,–	331,–	2074,–
Lid, galvanized	A	142,–	22,–	164,–
Castor Set, polyamide, Load capacity 1350 kg / castor set	A	192,–	15,–	207,–
Skip Body Welded Oil and Watertight	A	78,–	0,–	78,–
NK 100, painted	A	1508,–	331,–	1839,–
Lid, galvanized	A	173,–	27,–	200,–
Castor Set, polyamide, Load capacity 1350 kg / castor set	A	192,–	15,–	207,–
Skip Body Welded Oil and Watertight	A	121,–	0,–	121,–
NK 100, hot-dip galvanized	A	2070,–	331,–	2401,–
Lid, galvanized	A	173,–	27,–	200,–
Castor Set, polyamide, Load capacity 1350 kg / castor set	A	192,–	15,–	207,–
Skip Body Welded Oil and Watertight	A	121,–	0,–	121,–

Cylindrical Container Type RB	Category	Price	Freight charges	Price including freight charges
RB 300, painted	A	679,–	138,–	817,–
Lid, aluminium	A	160,–	14,–	174,–
Castor Set, polyamide, Load capacity 1050 kg / castor set	A	156,–	15,–	171,–
RB 450, painted	A	793,–	138,–	931,–
Lid, aluminium	A	160,–	14,–	174,–
Castor Set, polyamide, Load capacity 1050 kg / castor set	A	156,–	15,–	171,–

Tilting Container Type RD	Category	Price	Freight charges	Price including freight charges
RD 750, painted	A	1202,–	331,–	1533,–
Castor Set, polyamide, Load capacity 1350 kg / castor set	A	192,–	15,–	207,–
Skip Body Welded Oil and Watertight	A	78,–	0,–	78,–
RD 750, hot-dip galvanized	A	1602,–	331,–	1933,–
Castor Set, polyamide, Load capacity 1350 kg / castor set	A	192,–	15,–	207,–
Skip Body Welded Oil and Watertight	A	78,–	0,–	78,–
RD 1000, painted	A	1449,–	331,–	1780,–
Castor Set, polyamide, Load capacity 1350 kg / castor set	A	192,–	15,–	207,–
Skip Body Welded Oil and Watertight	A	121,–	0,–	121,–
RD 1000, hot-dip galvanized	A	1933,–	331,–	2264,–
Castor Set, polyamide, Load capacity 1350 kg / castor set	A	192,–	15,–	207,–
Skip Body Welded Oil and Watertight	A	121,–	0,–	121,–

Platform for Off-Cuts Type RGP	Category	Price	Freight charges	Price including freight charges
RGP-1, painted	A	2437,–	on request	on request

Prices in EUR, valid EXW DE-46354 Südlohn, DE-38820 Halberstadt, unpacked
Freight charges valid CPT Bulgaria, islands and oversea territories excluded

BAUER GmbH
Eichendorffstr. 62
46354 Südlohn, Germany

Tel. +49 2862 70 90
info@bauer-suedlohn.com
www.bauer-suedlohn.com

Geschäftsführer
Patrick Bauer, Pascal Bauer
Amtsgericht Coesfeld HRB 5259

TÜVNORD
TÜV NORD CERT GmbH
DIN EN ISO 9001
tuev-nord.de

Price List 0726 en-BG
Forklift Truck Attachments

Platform for Off-Cuts Type RGP	Category	Price	Freight charges	Price including freight charges
RGP-1, hot-dip galvanized	A	3118,–	on request	on request
RGP-2, painted	A	2669,–	on request	on request
RGP-2, hot-dip galvanized	A	3558,–	on request	on request
RGP-3, painted	A	2907,–	on request	on request
RGP-3, hot-dip galvanized	A	3916,–	on request	on request

Shunting Aid Type RH	Category	Price	Freight charges	Price including freight charges
RH, painted	A	426,–	118,–	544,–

Shunting Aid Type RH-AC	Category	Price	Freight charges	Price including freight charges
RH-AC, painted	A	2305,–	331,–	2636,–

Shunting Aid Type RH-RA	Category	Price	Freight charges	Price including freight charges
RH-RA, painted	A	1586,–	138,–	1724,–

Shunting Aid Type RH-RAK	Category	Price	Freight charges	Price including freight charges
RH-RAK, painted	A	1691,–	138,–	1829,–

Shunting Aid Type RH-RM	Category	Price	Freight charges	Price including freight charges
RH-RM, painted	A	1178,–	138,–	1316,–

Shunting Aid Type RH-RMK	Category	Price	Freight charges	Price including freight charges
RH-RMK, painted	A	1285,–	138,–	1423,–

Drum Lifter Type RS 60	Category	Price	Freight charges	Price including freight charges
RS 60-I, painted	B	1013,–	138,–	1151,–
RS 60-I, hot-dip galvanized	B	1076,–	138,–	1214,–
RS 60-II, painted	B	1713,–	138,–	1851,–
RS 60-II, hot-dip galvanized	B	1798,–	138,–	1936,–

Drum Lifter Type RS	Category	Price	Freight charges	Price including freight charges
RS-I/91, painted	B	1701,–	226,–	1927,–
RS-I/91, hot-dip galvanized	B	1945,–	226,–	2171,–
RS-II/91, painted	B	2948,–	226,–	3174,–
RS-II/91, hot-dip galvanized	B	3320,–	226,–	3546,–
RS-I/M, painted	B	1556,–	138,–	1694,–
RS-I/M, hot-dip galvanized	B	1798,–	226,–	2024,–
RS-II/M, painted	B	2663,–	226,–	2889,–
RS-II/M, hot-dip galvanized	B	3030,–	226,–	3256,–

Drum Lifter Type RS/D 91	Category	Price	Freight charges	Price including freight charges
RS-I/D 91, painted	B	1488,–	226,–	1714,–
RS-I/D 91, hot-dip galvanized	B	1730,–	226,–	1956,–
RS-II/D 91, painted	B	2521,–	226,–	2747,–

Prices in EUR, valid EXW DE-46354 Südlohn, DE-38820 Halberstadt, unpacked
Freight charges valid CPT Bulgaria, islands and oversea territories excluded

BAUER GmbH
Eichendorffstr. 62
46354 Südlohn, Germany

Tel. +49 2862 70 90
info@bauer-suedlohn.com
www.bauer-suedlohn.com

Geschäftsführer
Patrick Bauer, Pascal Bauer
Amtsgericht Coesfeld HRB 5259

TÜVNORD
TÜV NORD CERT GmbH
DIN EN ISO 9001
tuev-nord.de

Price List 0726 en-BG
Forklift Truck Attachments

Drum Lifter Type RS/D 91	Category	Price	Freight charges	Price including freight charges
RS-II/D 91, hot-dip galvanized	B	2887,–	226,–	3113,–

Swarf Tilting Container Type S3S	Category	Price	Freight charges	Price including freight charges
S3S 300, painted	A	1357,–	226,–	1583,–
Lid, galvanized	A	174,–	18,–	192,–
Castor Set, polyamide, Load capacity 1050 kg / castor set	A	136,–	15,–	151,–
S3S 300, hot-dip galvanized	A	1454,–	331,–	1785,–
Lid, galvanized	A	174,–	18,–	192,–
Castor Set, polyamide, Load capacity 1050 kg / castor set	A	136,–	15,–	151,–
S3S 600, painted	A	1413,–	331,–	1744,–
Lid, galvanized	A	196,–	22,–	218,–
Castor Set, polyamide, Load capacity 1050 kg / castor set	A	136,–	15,–	151,–
S3S 600, hot-dip galvanized	A	1514,–	331,–	1845,–
Lid, galvanized	A	196,–	22,–	218,–
Castor Set, polyamide, Load capacity 1050 kg / castor set	A	136,–	15,–	151,–

Swarf Tilting Container Type S4A	Category	Price	Freight charges	Price including freight charges
S4A 600, painted	A	1271,–	226,–	1497,–
Lid, galvanized	A	196,–	22,–	218,–
S4A 600, hot-dip galvanized	A	1418,–	226,–	1644,–
Lid, galvanized	A	196,–	22,–	218,–
S4A 900, painted	A	1408,–	331,–	1739,–
Lid, galvanized	A	223,–	27,–	250,–
S4A 900, hot-dip galvanized	A	1595,–	331,–	1926,–
Lid, galvanized	A	223,–	27,–	250,–
S4A 1200, painted	A	1497,–	331,–	1828,–
Lid, galvanized	A	223,–	26,–	249,–
S4A 1200, hot-dip galvanized	A	1730,–	331,–	2061,–
Lid, galvanized	A	223,–	26,–	249,–

Container With Drop Away Base Type SB	Category	Price	Freight charges	Price including freight charges
SB 500, painted	B	1000,–	226,–	1226,–
Lid, galvanized	B	143,–	16,–	159,–
Castor Set, polyamide, Load capacity 1350 kg / castor set	A	192,–	15,–	207,–
Heavy-duty Castor Set, polyamide, Load capacity 2550 kg / castor set	A	379,–	15,–	394,–
SB 500, hot-dip galvanized	B	1303,–	226,–	1529,–
Lid, galvanized	B	143,–	16,–	159,–
Castor Set, polyamide, Load capacity 1350 kg / castor set	A	192,–	15,–	207,–
Heavy-duty Castor Set, polyamide, Load capacity 2550 kg / castor set	A	379,–	15,–	394,–
SB 750, painted	B	1094,–	226,–	1320,–
Lid, galvanized	B	143,–	16,–	159,–
Castor Set, polyamide, Load capacity 1350 kg / castor set	A	192,–	15,–	207,–
Heavy-duty Castor Set, polyamide, Load capacity 2550 kg / castor set	A	379,–	15,–	394,–
SB 750, hot-dip galvanized	B	1520,–	331,–	1851,–
Lid, galvanized	B	143,–	16,–	159,–

Prices in EUR, valid EXW DE-46354 Südlohn, DE-38820 Halberstadt, unpacked
Freight charges valid CPT Bulgaria, islands and oversea territories excluded

BAUER GmbH
Eichendorffstr. 62
46354 Südlohn, Germany

Tel. +49 2862 70 90
info@bauer-suedlohn.com
www.bauer-suedlohn.com

Geschäftsführer
Patrick Bauer, Pascal Bauer
Amtsgericht Coesfeld HRB 5259

TÜVNORD
TÜV NORD CERT GmbH
DIN EN ISO 9001
tuev-nord.de

Price List 0726 en-BG
Forklift Truck Attachments

Container With Drop Away Base Type SB	Category	Price	Freight charges	Price including freight charges
Castor Set, polyamide, Load capacity 1350 kg / castor set	A	192,–	15,–	207,–
Heavy-duty Castor Set, polyamide, Load capacity 2550 kg / castor set	A	379,–	15,–	394,–
SB 1000, painted	B	1295,–	331,–	1626,–
Lid, galvanized	B	143,–	16,–	159,–
Castor Set, polyamide, Load capacity 1350 kg / castor set	A	192,–	15,–	207,–
Heavy-duty Castor Set, polyamide, Load capacity 2550 kg / castor set	A	379,–	15,–	394,–
SB 1000, hot-dip galvanized	B	1801,–	331,–	2132,–
Lid, galvanized	B	143,–	16,–	159,–
Castor Set, polyamide, Load capacity 1350 kg / castor set	A	192,–	15,–	207,–
Heavy-duty Castor Set, polyamide, Load capacity 2550 kg / castor set	A	379,–	15,–	394,–
SB 1500, painted	B	1755,–	331,–	2086,–
Lid, galvanized	B	254,–	21,–	275,–
Castor Set, polyamide, Load capacity 1350 kg / castor set	A	192,–	15,–	207,–
Heavy-duty Castor Set, polyamide, Load capacity 2550 kg / castor set	A	379,–	15,–	394,–
SB 1500, hot-dip galvanized	B	2443,–	402,–	2845,–
Lid, galvanized	B	254,–	21,–	275,–
Castor Set, polyamide, Load capacity 1350 kg / castor set	A	192,–	15,–	207,–
Heavy-duty Castor Set, polyamide, Load capacity 2550 kg / castor set	A	379,–	15,–	394,–
SB 2000, painted	B	1803,–	402,–	2205,–
Lid, galvanized	B	254,–	21,–	275,–
Castor Set, polyamide, Load capacity 1350 kg / castor set	A	192,–	15,–	207,–
Heavy-duty Castor Set, polyamide, Load capacity 2550 kg / castor set	A	379,–	15,–	394,–
SB 2000, hot-dip galvanized	B	2581,–	402,–	2983,–
Lid, galvanized	B	254,–	21,–	275,–
Castor Set, polyamide, Load capacity 1350 kg / castor set	A	192,–	15,–	207,–
Heavy-duty Castor Set, polyamide, Load capacity 2550 kg / castor set	A	379,–	15,–	394,–

Collecting System Type SBS	Category	Price	Freight charges	Price including freight charges
SBS 500, painted	C	399,–	226,–	625,–
Trolley TW 500, hot-dip galvanized	C	258,–	138,–	396,–
SBS 500, hot-dip galvanized	C	472,–	226,–	698,–
Trolley TW 500, hot-dip galvanized	C	258,–	138,–	396,–
SBS 1000, painted	C	509,–	226,–	735,–
Trolley TW 1000, hot-dip galvanized	C	297,–	138,–	435,–
SBS 1000, hot-dip galvanized	C	626,–	226,–	852,–
Trolley TW 1000, hot-dip galvanized	C	297,–	138,–	435,–
SBS 2000, painted	C	807,–	384,–	1191,–
Trolley TW 2000, hot-dip galvanized	C	505,–	138,–	643,–
SBS 2000, hot-dip galvanized	C	968,–	384,–	1352,–
Trolley TW 2000, hot-dip galvanized	C	505,–	138,–	643,–

Filling Hopper Type SBT	Category	Price	Freight charges	Price including freight charges
SBT, painted	A	1671,–	331,–	2002,–

Prices in EUR, valid EXW DE-46354 Südlohn, DE-38820 Halberstadt, unpacked
Freight charges valid CPT Bulgaria, islands and oversea territories excluded

BAUER GmbH
Eichendorffstr. 62
46354 Südlohn, Germany

Tel. +49 2862 70 90
info@bauer-suedlohn.com
www.bauer-suedlohn.com

Geschäftsführer
Patrick Bauer, Pascal Bauer
Amtsgericht Coesfeld HRB 5259

TÜVNORD
TÜV NORD CERT GmbH
DIN EN ISO 9001
tuev-nord.de

Price List 0726 en-BG
Forklift Truck Attachments

Snowdozer Type SCH-F	Category	Price	Freight charges	Price including freight charges
SCH-F 150, painted	A	2233,–	331,–	2564,–
SCH-F 180, painted	A	2507,–	331,–	2838,–
SCH-F 210, painted	A	2818,–	331,–	3149,–
SCH-F 240, painted	A	3095,–	455,–	3550,–

Snowdozer Type SCH-G	Category	Price	Freight charges	Price including freight charges
SCH-G 150, painted	A	1584,–	226,–	1810,–
SCH-G 180, painted	A	1730,–	226,–	1956,–
SCH-G 210, painted	A	1998,–	331,–	2329,–
SCH-G 240, painted	A	2160,–	384,–	2544,–

Snowdozer Type SCH-L	Category	Price	Freight charges	Price including freight charges
SCH-L 1500, painted	A	1182,–	226,–	1408,–
SCH-L 1500, hot-dip galvanized	A	1310,–	226,–	1536,–
SCH-L 1800, painted	A	1380,–	226,–	1606,–
SCH-L 1800, hot-dip galvanized	A	1532,–	226,–	1758,–

Snow Plough Type SCH-P-G	Category	Price	Freight charges	Price including freight charges
SCH-P-G 150, painted	A	2493,–	331,–	2824,–
SCH-P-G 180, painted	A	2677,–	331,–	3008,–
SCH-P-G 210, painted	A	2870,–	331,–	3201,–
SCH-P-G 240, painted	A	3408,–	384,–	3792,–

Snow Plough Type SCH-P-S	Category	Price	Freight charges	Price including freight charges
SCH-P-S 150, painted	A	2318,–	331,–	2649,–
SCH-P-S 180, painted	A	2476,–	331,–	2807,–
SCH-P-S 210, painted	A	2629,–	331,–	2960,–
SCH-P-S 240, painted	A	3128,–	384,–	3512,–

Snow Plough Type SCH-P-V	Category	Price	Freight charges	Price including freight charges
SCH-P-V 150, painted	A	2681,–	331,–	3012,–
SCH-P-V 180, painted	A	2949,–	331,–	3280,–
SCH-P-V 210, painted	A	3200,–	331,–	3531,–
SCH-P-V 240, painted	A	3741,–	384,–	4125,–

Snowdozer Type SCH-S	Category	Price	Freight charges	Price including freight charges
SCH-S 150, painted	A	1407,–	226,–	1633,–
SCH-S 180, painted	A	1528,–	226,–	1754,–
SCH-S 210, painted	A	1760,–	331,–	2091,–
SCH-S 240, painted	A	1880,–	384,–	2264,–

Snow Plough Type SCH-U-G	Category	Price	Freight charges	Price including freight charges
SCH-U-G 150, painted	A	2493,–	331,–	2824,–
SCH-U-G 180, painted	A	2677,–	331,–	3008,–

Prices in EUR, valid EXW DE-46354 Südlohn, DE-38820 Halberstadt, unpacked
Freight charges valid CPT Bulgaria, islands and oversea territories excluded

BAUER GmbH
Eichendorffstr. 62
46354 Südlohn, Germany

Tel. +49 2862 70 90
info@bauer-suedlohn.com
www.bauer-suedlohn.com

Geschäftsführer
Patrick Bauer, Pascal Bauer
Amtsgericht Coesfeld HRB 5259

TÜVNORD
TÜV NORD CERT GmbH
DIN EN ISO 9001
tuev-nord.de

Price List 0726 en-BG
Forklift Truck Attachments

Snow Plough Type SCH-U-G	Category	Price	Freight charges	Price including freight charges
SCH-U-G 210, painted	A	2870,–	331,–	3201,–
SCH-U-G 240, painted	A	3408,–	384,–	3792,–

Snow Plough Type SCH-U-S	Category	Price	Freight charges	Price including freight charges
SCH-U-S 150, painted	A	2318,–	331,–	2649,–
SCH-U-S 180, painted	A	2476,–	331,–	2807,–
SCH-U-S 210, painted	A	2629,–	331,–	2960,–
SCH-U-S 240, painted	A	3128,–	384,–	3512,–

Snow Plough Type SCH-U-V	Category	Price	Freight charges	Price including freight charges
SCH-U-V 150, painted	A	2681,–	331,–	3012,–
SCH-U-V 180, painted	A	2949,–	331,–	3280,–
SCH-U-V 210, painted	A	3200,–	331,–	3531,–
SCH-U-V 240, painted	A	3741,–	384,–	4125,–

Snowdozer Type SCH-V	Category	Price	Freight charges	Price including freight charges
SCH-V 150, painted	A	1769,–	226,–	1995,–
SCH-V 180, painted	A	1991,–	226,–	2217,–
SCH-V 210, painted	A	2331,–	331,–	2662,–
SCH-V 240, painted	A	2492,–	384,–	2876,–

Silo Container Type SG	Category	Price	Freight charges	Price including freight charges
SG 375, painted	E	1014,–	226,–	1240,–
Lid, galvanized	E	131,–	28,–	159,–
SG 375, hot-dip galvanized	E	1760,–	226,–	1986,–
Lid, galvanized	E	131,–	28,–	159,–
SG 600, painted	E	1209,–	226,–	1435,–
Lid, galvanized	E	131,–	28,–	159,–
SG 600, hot-dip galvanized	E	1951,–	226,–	2177,–
Lid, galvanized	E	131,–	28,–	159,–

Silo Container Type SG-D	Category	Price	Freight charges	Price including freight charges
SG-D 375, painted	E	1014,–	138,–	1152,–
Lid, galvanized	E	131,–	28,–	159,–
SG-D 375, hot-dip galvanized	E	1760,–	226,–	1986,–
Lid, galvanized	E	131,–	28,–	159,–
SG-D 600, painted	E	1209,–	226,–	1435,–
Lid, galvanized	E	131,–	28,–	159,–
SG-D 600, hot-dip galvanized	E	1951,–	226,–	2177,–
Lid, galvanized	E	131,–	28,–	159,–

Silo Container Type SGK	Category	Price	Freight charges	Price including freight charges
SGK 50, painted	A	1115,–	226,–	1341,–
SGK 50, hot-dip galvanized	A	1142,–	226,–	1368,–
SGK 75, painted	A	1214,–	226,–	1440,–

Prices in EUR, valid EXW DE-46354 Südlohn, DE-38820 Halberstadt, unpacked
Freight charges valid CPT Bulgaria, islands and oversea territories excluded

BAUER GmbH
Eichendorffstr. 62
46354 Südlohn, Germany

Tel. +49 2862 70 90
info@bauer-suedlohn.com
www.bauer-suedlohn.com

Geschäftsführer
Patrick Bauer, Pascal Bauer
Amtsgericht Coesfeld HRB 5259

TÜVNORD
TÜV NORD CERT GmbH
DIN EN ISO 9001
tuev-nord.de

Price List 0726 en-BG
Forklift Truck Attachments

Silo Container Type SGK	Category	Price	Freight charges	Price including freight charges
SGK 75, hot-dip galvanized	A	1251,–	226,–	1477,–
SGK 100, painted	A	1327,–	226,–	1553,–
SGK 100, hot-dip galvanized	A	1367,–	226,–	1593,–

Silo Container Type SGS	Category	Price	Freight charges	Price including freight charges
SGS 50, painted	A	885,–	138,–	1023,–
SGS 50, hot-dip galvanized	A	902,–	226,–	1128,–
SGS 75, painted	A	982,–	226,–	1208,–
SGS 75, hot-dip galvanized	A	1015,–	226,–	1241,–
SGS 100, painted	A	1078,–	226,–	1304,–
SGS 100, hot-dip galvanized	A	1110,–	226,–	1336,–

Swarf Tilting Container Type SGU	Category	Price	Freight charges	Price including freight charges
SGU 30, painted	A	940,–	226,–	1166,–
Lid, galvanized	A	98,–	18,–	116,–
Castor Set, polyamide, Load capacity 1350 kg / castor set	A	192,–	15,–	207,–
Crane lifting eyes for use with a crane	A	106,–	8,–	114,–
Support legs, 100 mm ground leeway	A	70,–	8,–	78,–
SGU 30, hot-dip galvanized	A	1117,–	226,–	1343,–
Lid, galvanized	A	98,–	18,–	116,–
Castor Set, polyamide, Load capacity 1350 kg / castor set	A	192,–	15,–	207,–
Crane lifting eyes for use with a crane	A	106,–	8,–	114,–
Support legs, 100 mm ground leeway	A	70,–	8,–	78,–
SGU 50, painted	A	1163,–	226,–	1389,–
Lid, galvanized	A	98,–	18,–	116,–
Castor Set, polyamide, Load capacity 1350 kg / castor set	A	192,–	15,–	207,–
Adjustable dumping brake	A	464,–	10,–	474,–
Crane lifting eyes for use with a crane	A	106,–	8,–	114,–
Support legs, 100 mm ground leeway	A	70,–	8,–	78,–
SGU 50, hot-dip galvanized	A	1407,–	226,–	1633,–
Lid, galvanized	A	98,–	18,–	116,–
Castor Set, polyamide, Load capacity 1350 kg / castor set	A	192,–	15,–	207,–
Adjustable dumping brake	A	464,–	10,–	474,–
Crane lifting eyes for use with a crane	A	106,–	8,–	114,–
Support legs, 100 mm ground leeway	A	70,–	8,–	78,–
SGU 75, painted	A	1312,–	226,–	1538,–
Lid, galvanized	A	139,–	26,–	165,–
Castor Set, polyamide, Load capacity 1350 kg / castor set	A	192,–	15,–	207,–
Adjustable dumping brake	A	464,–	10,–	474,–
Crane lifting eyes for use with a crane	A	106,–	8,–	114,–
Support legs, 100 mm ground leeway	A	70,–	8,–	78,–
SGU 75, hot-dip galvanized	A	1623,–	226,–	1849,–
Lid, galvanized	A	139,–	26,–	165,–
Castor Set, polyamide, Load capacity 1350 kg / castor set	A	192,–	15,–	207,–
Adjustable dumping brake	A	464,–	10,–	474,–

Prices in EUR, valid EXW DE-46354 Südlohn, DE-38820 Halberstadt, unpacked
Freight charges valid CPT Bulgaria, islands and oversea territories excluded

BAUER GmbH
Eichendorffstr. 62
46354 Südlohn, Germany

Tel. +49 2862 70 90
info@bauer-suedlohn.com
www.bauer-suedlohn.com

Geschäftsführer
Patrick Bauer, Pascal Bauer
Amtsgericht Coesfeld HRB 5259

TÜVNORD
TÜV NORD CERT GmbH
DIN EN ISO 9001
tuev-nord.de

Price List 0726 en-BG
Forklift Truck Attachments

Swarf Tilting Container Type SGU	Category	Price	Freight charges	Price including freight charges
Crane lifting eyes for use with a crane	A	106,–	8,–	114,–
Support legs, 100 mm ground leeway	A	70,–	8,–	78,–
SGU 100, painted	A	1571,–	331,–	1902,–
Lid, galvanized	A	192,–	27,–	219,–
Castor Set, polyamide, Load capacity 1350 kg / castor set	A	192,–	15,–	207,–
Adjustable dumping brake	A	464,–	10,–	474,–
Crane lifting eyes for use with a crane	A	106,–	8,–	114,–
Support legs, 100 mm ground leeway	A	70,–	8,–	78,–
SGU 100, hot-dip galvanized	A	2120,–	331,–	2451,–
Lid, galvanized	A	192,–	27,–	219,–
Castor Set, polyamide, Load capacity 1350 kg / castor set	A	192,–	15,–	207,–
Adjustable dumping brake	A	464,–	10,–	474,–
Crane lifting eyes for use with a crane	A	106,–	8,–	114,–
Support legs, 100 mm ground leeway	A	70,–	8,–	78,–
SGU 150, painted	A	1764,–	331,–	2095,–
Lid, galvanized	A	192,–	27,–	219,–
Castor Set, polyamide, Load capacity 1350 kg / castor set	A	192,–	15,–	207,–
Adjustable dumping brake	A	464,–	10,–	474,–
Crane lifting eyes for use with a crane	A	106,–	8,–	114,–
Support legs, 100 mm ground leeway	A	70,–	8,–	78,–
SGU 150, hot-dip galvanized	A	2242,–	331,–	2573,–
Lid, galvanized	A	192,–	27,–	219,–
Castor Set, polyamide, Load capacity 1350 kg / castor set	A	192,–	15,–	207,–
Adjustable dumping brake	A	464,–	10,–	474,–
Crane lifting eyes for use with a crane	A	106,–	8,–	114,–
Support legs, 100 mm ground leeway	A	70,–	8,–	78,–
SGU 200, painted	A	2215,–	402,–	2617,–
Lid, galvanized	A	226,–	32,–	258,–
Castor Set, polyamide, Load capacity 1350 kg / castor set	A	192,–	15,–	207,–
Adjustable dumping brake	A	464,–	10,–	474,–
Crane lifting eyes for use with a crane	A	106,–	8,–	114,–
Support legs, 100 mm ground leeway	A	70,–	8,–	78,–
SGU 200, hot-dip galvanized	A	2779,–	402,–	3181,–
Castor Set, polyamide, Load capacity 1350 kg / castor set	A	192,–	15,–	207,–
Lid, galvanized	A	226,–	32,–	258,–
Adjustable dumping brake	A	464,–	10,–	474,–
Crane lifting eyes for use with a crane	A	106,–	8,–	114,–
Support legs, 100 mm ground leeway	A	70,–	8,–	78,–

Swarf Tilting Container Type SGU-RZ	Category	Price	Freight charges	Price including freight charges
SGU-RZ 30, painted	A	972,–	226,–	1198,–
Lid, galvanized	A	95,–	18,–	113,–
SGU-RZ 30, hot-dip galvanized	A	1097,–	226,–	1323,–
Lid, galvanized	A	95,–	18,–	113,–
SGU-RZ 55, painted	A	1202,–	226,–	1428,–
Lid, galvanized	A	95,–	18,–	113,–

Prices in EUR, valid EXW DE-46354 Südlohn, DE-38820 Halberstadt, unpacked
Freight charges valid CPT Bulgaria, islands and oversea territories excluded

BAUER GmbH
Eichendorffstr. 62
46354 Südlohn, Germany

Tel. +49 2862 70 90
info@bauer-suedlohn.com
www.bauer-suedlohn.com

Geschäftsführer
Patrick Bauer, Pascal Bauer
Amtsgericht Coesfeld HRB 5259

TÜVNORD
TÜV NORD CERT GmbH
DIN EN ISO 9001
tuev-nord.de

Price List 0726 en-BG
Forklift Truck Attachments

Swarf Tilting Container Type SGU-RZ	Category	Price	Freight charges	Price including freight charges
SGU-RZ 55, hot-dip galvanized	A	1314,–	226,–	1540,–
Lid, galvanized	A	95,–	18,–	113,–

Gritter Type SH	Category	Price	Freight charges	Price including freight charges
SH, painted	A	3569,–	226,–	3795,–
Tarpaulin	A	122,–	10,–	132,–

Forklift Safety Cage Type SIKO	Category	Price	Freight charges	Price including freight charges
SIKO, painted	A	726,–	226,–	952,–
Castor Set, polyamide, Load capacity 1050 kg / castor set	A	136,–	15,–	151,–

Forklift Safety Cage Type SIKO/L	Category	Price	Freight charges	Price including freight charges
SIKO/L, painted	A	878,–	226,–	1104,–
Castor Set, polyamide, Load capacity 1050 kg / castor set	A	136,–	15,–	151,–

Forklift Safety Cage Type SIKO-G	Category	Price	Freight charges	Price including freight charges
SIKO-G, painted	A	657,–	138,–	795,–

Forklift Safety Cage Type SIKO-M	Category	Price	Freight charges	Price including freight charges
SIKO-M, painted	A	529,–	138,–	667,–

Heavy Duty Tilting Container Type SK	Category	Price	Freight charges	Price including freight charges
SK 300, painted	A	1281,–	331,–	1612,–
Lid, galvanized	A	174,–	18,–	192,–
Heavy-duty Castor Set, polyamide, Load capacity 2550 kg / castor set	A	379,–	15,–	394,–
Skip Body Welded Oil and Watertight	A	78,–	0,–	78,–
SK 300, hot-dip galvanized	A	1555,–	331,–	1886,–
Lid, galvanized	A	174,–	18,–	192,–
Heavy-duty Castor Set, polyamide, Load capacity 2550 kg / castor set	A	379,–	15,–	394,–
Skip Body Welded Oil and Watertight	A	78,–	0,–	78,–
SK 600, painted	A	1386,–	331,–	1717,–
Lid, galvanized	A	196,–	22,–	218,–
Heavy-duty Castor Set, polyamide, Load capacity 2550 kg / castor set	A	379,–	15,–	394,–
Skip Body Welded Oil and Watertight	A	78,–	0,–	78,–
SK 600, hot-dip galvanized	A	1724,–	402,–	2126,–
Lid, galvanized	A	196,–	22,–	218,–
Heavy-duty Castor Set, polyamide, Load capacity 2550 kg / castor set	A	379,–	15,–	394,–
Skip Body Welded Oil and Watertight	A	78,–	0,–	78,–
SK 900, painted	A	1510,–	402,–	1912,–
Lid, galvanized	A	223,–	27,–	250,–
Heavy-duty Castor Set, polyamide, Load capacity 2550 kg / castor set	A	379,–	15,–	394,–
Skip Body Welded Oil and Watertight	A	78,–	0,–	78,–
SK 900, hot-dip galvanized	A	1941,–	402,–	2343,–
Lid, galvanized	A	223,–	27,–	250,–
Heavy-duty Castor Set, polyamide, Load capacity 2550 kg / castor set	A	379,–	15,–	394,–

Prices in EUR, valid EXW DE-46354 Südlohn, DE-38820 Halberstadt, unpacked
Freight charges valid CPT Bulgaria, islands and oversea territories excluded

BAUER GmbH
Eichendorffstr. 62
46354 Südlohn, Germany

Tel. +49 2862 70 90
info@bauer-suedlohn.com
www.bauer-suedlohn.com

Geschäftsführer
Patrick Bauer, Pascal Bauer
Amtsgericht Coesfeld HRB 5259

TÜVNORD
TÜV NORD CERT GmbH
DIN EN ISO 9001
tuev-nord.de

Price List 0726 en-BG
Forklift Truck Attachments

Heavy Duty Tilting Container Type SK	Category	Price	Freight charges	Price including freight charges
Skip Body Welded Oil and Watertight	A	78,–	0,–	78,–
SK 1200, painted	A	1770,–	402,–	2172,–
Lid, galvanized	A	223,–	26,–	249,–
Heavy-duty Castor Set, polyamide, Load capacity 2550 kg / castor set	A	379,–	15,–	394,–
Skip Body Welded Oil and Watertight	A	121,–	0,–	121,–
SK 1200, hot-dip galvanized	A	2277,–	582,–	2859,–
Lid, galvanized	A	223,–	26,–	249,–
Heavy-duty Castor Set, polyamide, Load capacity 2550 kg / castor set	A	379,–	15,–	394,–
Skip Body Welded Oil and Watertight	A	121,–	0,–	121,–
SK 1700, painted	A	1862,–	582,–	2444,–
Lid, galvanized	A	276,–	33,–	309,–
Heavy-duty Castor Set, polyamide, Load capacity 2550 kg / castor set	A	379,–	15,–	394,–
Skip Body Welded Oil and Watertight	A	121,–	0,–	121,–
SK 1700, hot-dip galvanized	A	2492,–	582,–	3074,–
Lid, galvanized	A	276,–	33,–	309,–
Heavy-duty Castor Set, polyamide, Load capacity 2550 kg / castor set	A	379,–	15,–	394,–
Skip Body Welded Oil and Watertight	A	121,–	0,–	121,–
SK 2100, painted	A	2032,–	582,–	2614,–
Lid, galvanized	A	360,–	36,–	396,–
Heavy-duty Castor Set, polyamide, Load capacity 2550 kg / castor set	A	379,–	15,–	394,–
Skip Body Welded Oil and Watertight	A	121,–	0,–	121,–
SK 2100, hot-dip galvanized	A	2739,–	582,–	3321,–
Lid, galvanized	A	360,–	36,–	396,–
Heavy-duty Castor Set, polyamide, Load capacity 2550 kg / castor set	A	379,–	15,–	394,–
Skip Body Welded Oil and Watertight	A	121,–	0,–	121,–

Broom Type SKB	Category	Price	Freight charges	Price including freight charges
SKB 100, painted	A	958,–	138,–	1096,–
SKB 150, painted	A	1197,–	138,–	1335,–
SKB 200, painted	A	1475,–	138,–	1613,–

Broom Type SKB-O	Category	Price	Freight charges	Price including freight charges
SKB-O 100, painted	A	658,–	138,–	796,–
SKB-O 150, painted	A	898,–	138,–	1036,–
SKB-O 200, painted	A	1176,–	138,–	1314,–

Swarf Tipping Skip Type SKK	Category	Price	Freight charges	Price including freight charges
SKK 250, painted	E	534,–	138,–	672,–
Lid, galvanized	E	136,–	15,–	151,–
Castor Set, polyamide, Load capacity 1050 kg / castor set	A	136,–	15,–	151,–
Castor Set, solid rubber, Load capacity 615 kg / castor set	E	103,–	15,–	118,–
SKK 250, hot-dip galvanized	E	583,–	138,–	721,–
Lid, galvanized	E	136,–	15,–	151,–
Castor Set, polyamide, Load capacity 1050 kg / castor set	A	136,–	15,–	151,–
Castor Set, solid rubber, Load capacity 615 kg / castor set	E	103,–	15,–	118,–

Prices in EUR, valid EXW DE-46354 Südlohn, DE-38820 Halberstadt, unpacked
Freight charges valid CPT Bulgaria, islands and oversea territories excluded

BAUER GmbH
Eichendorffstr. 62
46354 Südlohn, Germany

Tel. +49 2862 70 90
info@bauer-suedlohn.com
www.bauer-suedlohn.com

Geschäftsführer
Patrick Bauer, Pascal Bauer
Amtsgericht Coesfeld HRB 5259

TÜVNORD
TÜV NORD CERT GmbH
DIN EN ISO 9001
tuev-nord.de

Price List 0726 en-BG
Forklift Truck Attachments

Swarf Tipping Skip Type SKK	Category	Price	Freight charges	Price including freight charges
SKK 400, painted	E	600,–	138,–	738,–
Lid, galvanized	E	156,–	16,–	172,–
Castor Set, polyamide, Load capacity 1050 kg / castor set	A	136,–	15,–	151,–
Castor Set, solid rubber, Load capacity 615 kg / castor set	E	103,–	15,–	118,–
SKK 400, hot-dip galvanized	E	649,–	138,–	787,–
Lid, galvanized	E	156,–	16,–	172,–
Castor Set, polyamide, Load capacity 1050 kg / castor set	A	136,–	15,–	151,–
Castor Set, solid rubber, Load capacity 615 kg / castor set	E	103,–	15,–	118,–
SKK 600, painted	E	815,–	226,–	1041,–
Lid, galvanized	E	173,–	20,–	193,–
Castor Set, polyamide, Load capacity 1050 kg / castor set	A	136,–	15,–	151,–
Castor Set, solid rubber, Load capacity 615 kg / castor set	E	103,–	15,–	118,–
SKK 600, hot-dip galvanized	E	914,–	226,–	1140,–
Lid, galvanized	E	173,–	20,–	193,–
Castor Set, polyamide, Load capacity 1050 kg / castor set	A	136,–	15,–	151,–
Castor Set, solid rubber, Load capacity 615 kg / castor set	E	103,–	15,–	118,–
SKK 800, painted	E	872,–	226,–	1098,–
Lid, galvanized	E	181,–	21,–	202,–
Castor Set, polyamide, Load capacity 1050 kg / castor set	A	136,–	15,–	151,–
Castor Set, solid rubber, Load capacity 615 kg / castor set	E	103,–	15,–	118,–
SKK 800, hot-dip galvanized	E	980,–	226,–	1206,–
Lid, galvanized	E	181,–	21,–	202,–
Castor Set, polyamide, Load capacity 1050 kg / castor set	A	136,–	15,–	151,–
Castor Set, solid rubber, Load capacity 615 kg / castor set	E	103,–	15,–	118,–
SKK 1000, painted	E	930,–	226,–	1156,–
Lid, galvanized	E	193,–	22,–	215,–
Castor Set, polyamide, Load capacity 1050 kg / castor set	A	136,–	15,–	151,–
Castor Set, solid rubber, Load capacity 615 kg / castor set	E	103,–	15,–	118,–
SKK 1000, hot-dip galvanized	E	1063,–	226,–	1289,–
Lid, galvanized	E	193,–	22,–	215,–
Castor Set, polyamide, Load capacity 1050 kg / castor set	A	136,–	15,–	151,–
Castor Set, solid rubber, Load capacity 615 kg / castor set	E	103,–	15,–	118,–

Swarf Tilting Container Type SKM	Category	Price	Freight charges	Price including freight charges
SKM 30, painted	A	950,–	226,–	1176,–
Lid, galvanized	A	104,–	18,–	122,–
SKM 30, hot-dip galvanized	A	1148,–	226,–	1374,–
Lid, galvanized	A	104,–	18,–	122,–
SKM 50, painted	A	1220,–	226,–	1446,–
Lid, galvanized	A	158,–	28,–	186,–
SKM 50, hot-dip galvanized	A	1478,–	226,–	1704,–
Lid, galvanized	A	158,–	28,–	186,–
SKM 75, painted	A	1469,–	226,–	1695,–
Lid, galvanized	A	175,–	33,–	208,–
SKM 75, hot-dip galvanized	A	1790,–	331,–	2121,–
Lid, galvanized	A	175,–	33,–	208,–

Prices in EUR, valid EXW DE-46354 Südlohn, DE-38820 Halberstadt, unpacked
Freight charges valid CPT Bulgaria, islands and oversea territories excluded

BAUER GmbH
Eichendorffstr. 62
46354 Südlohn, Germany

Tel. +49 2862 70 90
info@bauer-suedlohn.com
www.bauer-suedlohn.com

Geschäftsführer
Patrick Bauer, Pascal Bauer
Amtsgericht Coesfeld HRB 5259

TÜVNORD
TÜV NORD CERT GmbH
DIN EN ISO 9001
tuev-nord.de

Price List 0726 en-BG
Forklift Truck Attachments

Swarf Tipping Skip Type SKN	Category	Price	Freight charges	Price including freight charges
SKN 250, painted	E	534,–	138,–	672,–
Lid, galvanized	E	136,–	15,–	151,–
Castor Set, polyamide, Load capacity 1050 kg / castor set	A	136,–	15,–	151,–
Castor Set, solid rubber, Load capacity 615 kg / castor set	E	103,–	15,–	118,–
SKN 250, hot-dip galvanized	E	583,–	138,–	721,–
Lid, galvanized	E	136,–	15,–	151,–
Castor Set, polyamide, Load capacity 1050 kg / castor set	A	136,–	15,–	151,–
Castor Set, solid rubber, Load capacity 615 kg / castor set	E	103,–	15,–	118,–
SKN 400, painted	E	600,–	138,–	738,–
Lid, galvanized	E	156,–	16,–	172,–
Castor Set, polyamide, Load capacity 1050 kg / castor set	A	136,–	15,–	151,–
Castor Set, solid rubber, Load capacity 615 kg / castor set	E	103,–	15,–	118,–
SKN 400, hot-dip galvanized	E	649,–	138,–	787,–
Lid, galvanized	E	156,–	16,–	172,–
Castor Set, polyamide, Load capacity 1050 kg / castor set	A	136,–	15,–	151,–
Castor Set, solid rubber, Load capacity 615 kg / castor set	E	103,–	15,–	118,–

Swarf Tipping Skip Type SKS	Category	Price	Freight charges	Price including freight charges
SKS 400, painted	E	946,–	226,–	1172,–
SKS 550, painted	E	1013,–	226,–	1239,–
SKS 700, painted	E	1072,–	226,–	1298,–

Swarf Barrow Tipper Type SKW-ET	Category	Price	Freight charges	Price including freight charges
SKW-ET 250, painted	E	638,–	138,–	776,–
Lid, galvanized	E	136,–	15,–	151,–
SKW-ET 250, hot-dip galvanized	E	975,–	138,–	1113,–
Lid, galvanized	E	136,–	15,–	151,–
SKW-ET 400, painted	E	697,–	138,–	835,–
Lid, galvanized	E	156,–	16,–	172,–
SKW-ET 400, hot-dip galvanized	E	1071,–	138,–	1209,–
Lid, galvanized	E	156,–	16,–	172,–
SKW-ET 600, painted	E	851,–	226,–	1077,–
Lid, galvanized	E	173,–	20,–	193,–
SKW-ET 600, hot-dip galvanized	E	1233,–	226,–	1459,–
Lid, galvanized	E	173,–	20,–	193,–
SKW-ET 1000, painted	E	1032,–	226,–	1258,–
Lid, galvanized	E	193,–	22,–	215,–
SKW-ET 1000, hot-dip galvanized	E	1643,–	226,–	1869,–
Lid, galvanized	E	193,–	22,–	215,–

Mini Swarf Tilting Container Type SMGU	Category	Price	Freight charges	Price including freight charges
SMGU 230, painted	A	689,–	138,–	827,–
Lid, galvanized	A	131,–	18,–	149,–
Castor Set, polyamide, Load capacity 1050 kg / castor set	A	156,–	15,–	171,–
SMGU 230, hot-dip galvanized	A	775,–	226,–	1001,–

Prices in EUR, valid EXW DE-46354 Südlohn, DE-38820 Halberstadt, unpacked
Freight charges valid CPT Bulgaria, islands and oversea territories excluded

BAUER GmbH
Eichendorffstr. 62
46354 Südlohn, Germany

Tel. +49 2862 70 90
info@bauer-suedlohn.com
www.bauer-suedlohn.com

Geschäftsführer
Patrick Bauer, Pascal Bauer
Amtsgericht Coesfeld HRB 5259

TÜVNORD
TÜV NORD CERT GmbH
DIN EN ISO 9001
tuev-nord.de

Price List 0726 en-BG
Forklift Truck Attachments

Mini Swarf Tilting Container Type SMGU	Category	Price	Freight charges	Price including freight charges
Lid, galvanized	A	131,–	18,–	149,–
Castor Set, polyamide, Load capacity 1050 kg / castor set	A	156,–	15,–	171,–
SMGU 270, painted	A	744,–	226,–	970,–
Lid, galvanized	A	131,–	18,–	149,–
Castor Set, polyamide, Load capacity 1050 kg / castor set	A	156,–	15,–	171,–
SMGU 270, hot-dip galvanized	A	850,–	226,–	1076,–
Lid, galvanized	A	131,–	18,–	149,–
Castor Set, polyamide, Load capacity 1050 kg / castor set	A	156,–	15,–	171,–
SMGU 460, painted	A	935,–	226,–	1161,–
Lid, galvanized	A	169,–	22,–	191,–
Castor Set, polyamide, Load capacity 1050 kg / castor set	A	156,–	15,–	171,–
SMGU 460, hot-dip galvanized	A	1088,–	226,–	1314,–
Lid, galvanized	A	169,–	22,–	191,–
Castor Set, polyamide, Load capacity 1050 kg / castor set	A	156,–	15,–	171,–
SMGU 610, painted	A	1041,–	226,–	1267,–
Lid, galvanized	A	181,–	26,–	207,–
Castor Set, polyamide, Load capacity 1050 kg / castor set	A	156,–	15,–	171,–
SMGU 610, hot-dip galvanized	A	1209,–	226,–	1435,–
Lid, galvanized	A	181,–	26,–	207,–
Castor Set, polyamide, Load capacity 1050 kg / castor set	A	156,–	15,–	171,–

Silo Container Type SR	Category	Price	Freight charges	Price including freight charges
SR 375, painted	E	844,–	138,–	982,–
Lid, galvanized	E	131,–	33,–	164,–
SR 375, hot-dip galvanized	E	1584,–	138,–	1722,–
Lid, galvanized	E	131,–	33,–	164,–
SR 600, painted	E	1048,–	226,–	1274,–
Lid, galvanized	E	131,–	33,–	164,–
SR 600, hot-dip galvanized	E	1801,–	226,–	2027,–
Lid, galvanized	E	131,–	33,–	164,–

Silo Container Type SR-D	Category	Price	Freight charges	Price including freight charges
SR-D 375, painted	E	844,–	138,–	982,–
Lid, galvanized	E	131,–	33,–	164,–
SR-D 375, hot-dip galvanized	E	1584,–	138,–	1722,–
Lid, galvanized	E	131,–	33,–	164,–
SR-D 600, painted	E	1048,–	226,–	1274,–
Lid, galvanized	E	131,–	33,–	164,–
SR-D 600, hot-dip galvanized	E	1801,–	226,–	2027,–
Lid, galvanized	E	131,–	33,–	164,–

Silo Container Type SRE	Category	Price	Freight charges	Price including freight charges
SRE 375, painted	E	962,–	226,–	1188,–
Lid, galvanized	E	131,–	33,–	164,–
SRE 375, hot-dip galvanized	E	1723,–	226,–	1949,–

Prices in EUR, valid EXW DE-46354 Südlohn, DE-38820 Halberstadt, unpacked
Freight charges valid CPT Bulgaria, islands and oversea territories excluded

BAUER GmbH
Eichendorffstr. 62
46354 Südlohn, Germany

Tel. +49 2862 70 90
info@bauer-suedlohn.com
www.bauer-suedlohn.com

Geschäftsführer
Patrick Bauer, Pascal Bauer
Amtsgericht Coesfeld HRB 5259

TÜVNORD
TÜV NORD CERT GmbH
DIN EN ISO 9001
tuev-nord.de

Price List 0726 en-BG
Forklift Truck Attachments

Silo Container Type SRE	Category	Price	Freight charges	Price including freight charges
Lid, galvanized	E	131,–	33,–	164,–
SRE 600, painted	E	1171,–	226,–	1397,–
Lid, galvanized	E	131,–	33,–	164,–
SRE 600, hot-dip galvanized	E	1857,–	226,–	2083,–
Lid, galvanized	E	131,–	33,–	164,–

Silo Container Type SRE-D	Category	Price	Freight charges	Price including freight charges
SRE-D 375, painted	E	962,–	138,–	1100,–
Lid, galvanized	E	131,–	33,–	164,–
SRE-D 375, hot-dip galvanized	E	1723,–	226,–	1949,–
Lid, galvanized	E	131,–	33,–	164,–
SRE-D 600, painted	E	1171,–	226,–	1397,–
Lid, galvanized	E	131,–	33,–	164,–
SRE-D 600, hot-dip galvanized	E	1857,–	226,–	2083,–
Lid, galvanized	E	131,–	33,–	164,–

Forklift Tender System Type STS	Category	Price	Freight charges	Price including freight charges
STS 2,5, painted	C	3857,–	on request	on request
STS 5,0, painted	C	4546,–	on request	on request

Spreader Type STW	Category	Price	Freight charges	Price including freight charges
STW 100, painted	A	1216,–	138,–	1354,–
Tarpaulin	A	116,–	10,–	126,–
STW 260, painted	A	2147,–	138,–	2285,–
Tarpaulin	A	122,–	10,–	132,–

Traverse for Big Bags Type TBB	Category	Price	Freight charges	Price including freight charges
TBB, painted	A	901,–	138,–	1039,–

Traverse For Big Bags Type TBB-E	Category	Price	Freight charges	Price including freight charges
TBB-E, painted	A	852,–	138,–	990,–

Traverse For Big Bags Type TBB-W	Category	Price	Freight charges	Price including freight charges
TBB-W, painted	A	1093,–	138,–	1231,–

Mini Lifting Beam Type TM	Category	Price	Freight charges	Price including freight charges
TM 200-500, hot-dip galvanized	F	399,–	118,–	517,–
TM 400-800, hot-dip galvanized	F	429,–	118,–	547,–
TM 800-1200, hot-dip galvanized	F	566,–	118,–	684,–

Tilting Container Type TRIO	Category	Price	Freight charges	Price including freight charges
TRIO, painted	A	2333,–	402,–	2735,–
Lid, galvanized	A	215,–	26,–	241,–
Castor Set, polyamide, Load capacity 1350 kg / castor set	A	192,–	15,–	207,–

Prices in EUR, valid EXW DE-46354 Südlohn, DE-38820 Halberstadt, unpacked
Freight charges valid CPT Bulgaria, islands and oversea territories excluded

BAUER GmbH
Eichendorffstr. 62
46354 Südlohn, Germany

Tel. +49 2862 70 90
info@bauer-suedlohn.com
www.bauer-suedlohn.com

Geschäftsführer
Patrick Bauer, Pascal Bauer
Amtsgericht Coesfeld HRB 5259

TÜVNORD
TÜV NORD CERT GmbH
DIN EN ISO 9001
tuev-nord.de

Price List 0726 en-BG
Forklift Truck Attachments

Tilting Container Type TRIO	Category	Price	Freight charges	Price including freight charges
Set of 5 self-adhesive stickers with symbols for: glass, paper, plastic, metal, residual waste	A	29,–	on request	on request

Universal Container Type UC	Category	Price	Freight charges	Price including freight charges
UC 500, painted	A	675,–	138,–	813,–
Lid, galvanized	A	168,–	16,–	184,–
Castor Set, polyamide, Load capacity 1350 kg / castor set	A	192,–	15,–	207,–
Pick-up Profile on Type UC for Traverse Type UCT	A	106,–	0,–	106,–
UC 500, hot-dip galvanized	A	771,–	226,–	997,–
Lid, galvanized	A	168,–	16,–	184,–
Castor Set, polyamide, Load capacity 1350 kg / castor set	A	192,–	15,–	207,–
Pick-up Profile on Type UC for Traverse Type UCT	A	106,–	0,–	106,–
UC 750, painted	A	734,–	226,–	960,–
Lid, galvanized	A	168,–	16,–	184,–
Castor Set, polyamide, Load capacity 1350 kg / castor set	A	192,–	15,–	207,–
Pick-up Profile on Type UC for Traverse Type UCT	A	106,–	0,–	106,–
UC 750, hot-dip galvanized	A	853,–	226,–	1079,–
Lid, galvanized	A	168,–	16,–	184,–
Castor Set, polyamide, Load capacity 1350 kg / castor set	A	192,–	15,–	207,–
Pick-up Profile on Type UC for Traverse Type UCT	A	106,–	0,–	106,–
UC 1000, painted	A	771,–	226,–	997,–
Lid, galvanized	A	168,–	16,–	184,–
Castor Set, polyamide, Load capacity 1350 kg / castor set	A	192,–	15,–	207,–
Pick-up Profile on Type UC for Traverse Type UCT	A	106,–	0,–	106,–
UC 1000, hot-dip galvanized	A	894,–	226,–	1120,–
Lid, galvanized	A	168,–	16,–	184,–
Castor Set, polyamide, Load capacity 1350 kg / castor set	A	192,–	15,–	207,–
Pick-up Profile on Type UC for Traverse Type UCT	A	106,–	0,–	106,–

Hydraulic Traverse Type UCT	Category	Price	Freight charges	Price including freight charges
UCT, painted	A	2737,–	331,–	3068,–

Tilting Container Type VD	Category	Price	Freight charges	Price including freight charges
VD 500, painted	A	794,–	226,–	1020,–
Lid, galvanized	A	144,–	18,–	162,–
Castor Set, polyamide, Load capacity 1350 kg / castor set	A	192,–	15,–	207,–
Skip Body Welded Oil and Watertight	A	78,–	0,–	78,–
VD 500, hot-dip galvanized	A	1033,–	226,–	1259,–
Lid, galvanized	A	144,–	18,–	162,–
Castor Set, polyamide, Load capacity 1350 kg / castor set	A	192,–	15,–	207,–
Skip Body Welded Oil and Watertight	A	78,–	0,–	78,–
VD 650, painted	A	868,–	226,–	1094,–
Lid, galvanized	A	144,–	18,–	162,–
Castor Set, polyamide, Load capacity 1350 kg / castor set	A	192,–	15,–	207,–
Skip Body Welded Oil and Watertight	A	78,–	0,–	78,–
VD 650, hot-dip galvanized	A	1130,–	226,–	1356,–

Prices in EUR, valid EXW DE-46354 Südlohn, DE-38820 Halberstadt, unpacked
Freight charges valid CPT Bulgaria, islands and oversea territories excluded

BAUER GmbH
Eichendorffstr. 62
46354 Südlohn, Germany

Tel. +49 2862 70 90
info@bauer-suedlohn.com
www.bauer-suedlohn.com

Geschäftsführer
Patrick Bauer, Pascal Bauer
Amtsgericht Coesfeld HRB 5259

TÜVNORD
TÜV NORD CERT GmbH
DIN EN ISO 9001
tuev-nord.de

Price List 0726 en-BG
Forklift Truck Attachments

Tilting Container Type VD	Category	Price	Freight charges	Price including freight charges
Lid, galvanized	A	144,–	18,–	162,–
Castor Set, polyamide, Load capacity 1350 kg / castor set	A	192,–	15,–	207,–
Skip Body Welded Oil and Watertight	A	78,–	0,–	78,–
VD 800, painted	A	991,–	226,–	1217,–
Lid, galvanized	A	174,–	22,–	196,–
Castor Set, polyamide, Load capacity 1350 kg / castor set	A	192,–	15,–	207,–
Skip Body Welded Oil and Watertight	A	78,–	0,–	78,–
VD 800, hot-dip galvanized	A	1346,–	226,–	1572,–
Lid, galvanized	A	174,–	22,–	196,–
Castor Set, polyamide, Load capacity 1350 kg / castor set	A	192,–	15,–	207,–
Skip Body Welded Oil and Watertight	A	78,–	0,–	78,–
VD 1000, painted	A	1041,–	226,–	1267,–
Lid, galvanized	A	174,–	22,–	196,–
Castor Set, polyamide, Load capacity 1350 kg / castor set	A	192,–	15,–	207,–
Skip Body Welded Oil and Watertight	A	121,–	0,–	121,–
VD 1000, hot-dip galvanized	A	1469,–	226,–	1695,–
Lid, galvanized	A	174,–	22,–	196,–
Castor Set, polyamide, Load capacity 1350 kg / castor set	A	192,–	15,–	207,–
Skip Body Welded Oil and Watertight	A	121,–	0,–	121,–

Tilting Container Type VG	Category	Price	Freight charges	Price including freight charges
VG 550, painted	A	812,–	226,–	1038,–
Lid, galvanized	A	144,–	18,–	162,–
Castor Set, polyamide, Load capacity 1350 kg / castor set	A	192,–	15,–	207,–
Skip Body Welded Oil and Watertight	A	78,–	0,–	78,–
VG 550, hot-dip galvanized	A	1058,–	226,–	1284,–
Lid, galvanized	A	144,–	18,–	162,–
Castor Set, polyamide, Load capacity 1350 kg / castor set	A	192,–	15,–	207,–
Skip Body Welded Oil and Watertight	A	78,–	0,–	78,–
VG 700, painted	A	962,–	226,–	1188,–
Lid, galvanized	A	144,–	18,–	162,–
Castor Set, polyamide, Load capacity 1350 kg / castor set	A	192,–	15,–	207,–
Skip Body Welded Oil and Watertight	A	78,–	0,–	78,–
VG 700, hot-dip galvanized	A	1252,–	226,–	1478,–
Lid, galvanized	A	144,–	18,–	162,–
Castor Set, polyamide, Load capacity 1350 kg / castor set	A	192,–	15,–	207,–
Skip Body Welded Oil and Watertight	A	78,–	0,–	78,–
VG 900, painted	A	1060,–	226,–	1286,–
Lid, galvanized	A	174,–	22,–	196,–
Castor Set, polyamide, Load capacity 1350 kg / castor set	A	192,–	15,–	207,–
Skip Body Welded Oil and Watertight	A	78,–	0,–	78,–
VG 900, hot-dip galvanized	A	1502,–	226,–	1728,–
Lid, galvanized	A	174,–	22,–	196,–
Castor Set, polyamide, Load capacity 1350 kg / castor set	A	192,–	15,–	207,–
Skip Body Welded Oil and Watertight	A	78,–	0,–	78,–
VG 1100, painted	A	1150,–	226,–	1376,–

Prices in EUR, valid EXW DE-46354 Südlohn, DE-38820 Halberstadt, unpacked
Freight charges valid CPT Bulgaria, islands and oversea territories excluded

BAUER GmbH
Eichendorffstr. 62
46354 Südlohn, Germany

Tel. +49 2862 70 90
info@bauer-suedlohn.com
www.bauer-suedlohn.com

Geschäftsführer
Patrick Bauer, Pascal Bauer
Amtsgericht Coesfeld HRB 5259

TÜVNORD
TÜV NORD CERT GmbH
DIN EN ISO 9001
tuev-nord.de

Price List 0726 en-BG
Forklift Truck Attachments

Tilting Container Type VG	Category	Price	Freight charges	Price including freight charges
Lid, galvanized	A	174,–	22,–	196,–
Castor Set, polyamide, Load capacity 1350 kg / castor set	A	192,–	15,–	207,–
Skip Body Welded Oil and Watertight	A	121,–	0,–	121,–
VG 1100, hot-dip galvanized	A	1561,–	226,–	1787,–
Lid, galvanized	A	174,–	22,–	196,–
Castor Set, polyamide, Load capacity 1350 kg / castor set	A	192,–	15,–	207,–
Skip Body Welded Oil and Watertight	A	121,–	0,–	121,–

Prices in EUR, valid EXW DE-46354 Südlohn, DE-38820 Halberstadt, unpacked
Freight charges valid CPT Bulgaria, islands and oversea territories excluded

BAUER GmbH
Eichendorffstr. 62
46354 Südlohn, Germany

Tel. +49 2862 70 90
info@bauer-suedlohn.com
www.bauer-suedlohn.com

Geschäftsführer
Patrick Bauer, Pascal Bauer
Amtsgericht Coesfeld HRB 5259

TÜVNORD
TÜV NORD CERT GmbH
DIN EN ISO 9001
tuev-nord.de

Price List 0726 en-BG
Workspace Material Handling

Battery Charging Station Type BL	Category	Price	Freight charges	Price including freight charges
BL 1, painted	A	1422,–	138,–	1560,–
Fire Extinguisher	A	204,–	14,–	218,–
Storage tray for water receptacle, painted	A	64,–	13,–	77,–
BL 2, painted	A	1798,–	138,–	1936,–
Fire Extinguisher	A	204,–	14,–	218,–
Storage tray for water receptacle, painted	A	64,–	13,–	77,–
BL 3, painted	A	1798,–	138,–	1936,–
Fire Extinguisher	A	204,–	14,–	218,–
Storage tray for water receptacle, painted	A	64,–	13,–	77,–

Drum Jack Roller Type FHR	Category	Price	Freight charges	Price including freight charges
FHR 600 F, painted	B	3286,–	331,–	3617,–
FHR 600 F, hot-dip galvanized	B	3641,–	331,–	3972,–
FHR 600 G, painted	B	2617,–	226,–	2843,–
FHR 600 G, hot-dip galvanized	B	2888,–	226,–	3114,–
FHR 600 K, painted	B	2617,–	226,–	2843,–
FHR 600 K, hot-dip galvanized	B	2888,–	226,–	3114,–

Drum Trolley Type FP-L	Category	Price	Freight charges	Price including freight charges
FP-L, galvanized	C	624,–	138,–	762,–

Drum Trolley Type FP-V	Category	Price	Freight charges	Price including freight charges
FP-V, galvanized	C	605,–	138,–	743,–

Drum Dolly Type FRW	Category	Price	Freight charges	Price including freight charges
FRW-I, hot-dip galvanized	A	116,–	118,–	234,–
FRW-II, hot-dip galvanized	A	154,–	118,–	272,–
FRW-III, hot-dip galvanized	A	207,–	138,–	345,–

Dolly Type GRW	Category	Price	Freight charges	Price including freight charges
GRW-I, hot-dip galvanized	F	126,–	118,–	244,–
Handle, hot-dip galvanized	F	55,–	10,–	65,–
GRW-II, hot-dip galvanized	F	143,–	118,–	261,–
Handle, hot-dip galvanized	F	55,–	10,–	65,–
GRW-III, hot-dip galvanized	F	179,–	138,–	317,–
Handle, hot-dip galvanized	F	55,–	10,–	65,–

Gas Cylinder Wall Bracket Type GWH	Category	Price	Freight charges	Price including freight charges
GWH 140-I, hot-dip galvanized	F	26,–	118,–	144,–
GWH 140-II, hot-dip galvanized	F	40,–	118,–	158,–

Prices in EUR, valid EXW DE-46354 Südlohn, DE-38820 Halberstadt, unpacked
Freight charges valid CPT Bulgaria, islands and oversea territories excluded

BAUER GmbH
Eichendorffstr. 62
46354 Südlohn, Germany

Tel. +49 2862 70 90
info@bauer-suedlohn.com
www.bauer-suedlohn.com

Geschäftsführer
Patrick Bauer, Pascal Bauer
Amtsgericht Coesfeld HRB 5259

TÜVNORD
TÜV NORD CERT GmbH
DIN EN ISO 9001
tuev-nord.de

Price List 0726 en-BG
Workspace Material Handling

Gas Cylinder Wall Bracket Type GWH	Category	Price	Freight charges	Price including freight charges
GWH 140-III, hot-dip galvanized	F	59,–	118,–	177,–
GWH 230-I, hot-dip galvanized	F	28,–	118,–	146,–
GWH 230-II, hot-dip galvanized	F	43,–	118,–	161,–
GWH 230-III, hot-dip galvanized	F	65,–	118,–	183,–
GWH 320-I, hot-dip galvanized	F	29,–	118,–	147,–
GWH 320-II, hot-dip galvanized	F	48,–	118,–	166,–
GWH 320-III, hot-dip galvanized	F	72,–	118,–	190,–

Fork Lifter Type GZH-A	Category	Price	Freight charges	Price including freight charges
GZH-A, painted	F	114,–	118,–	232,–

Fork Lifter Type GZH-B	Category	Price	Freight charges	Price including freight charges
GZH-B, painted	F	114,–	118,–	232,–

Fork Pallet Type GZP	Category	Price	Freight charges	Price including freight charges
GZP 4, hot-dip galvanized	A	161,–	138,–	299,–
GZP 8, hot-dip galvanized	A	201,–	138,–	339,–

IBC Residue Drainer Type IR	Category	Price	Freight charges	Price including freight charges
IR-1, hot-dip galvanized	A	596,–	138,–	734,–
IR-2, hot-dip galvanized	A	711,–	138,–	849,–
IR-3, hot-dip galvanized	A	596,–	138,–	734,–

Tilting Canister Stand Type KAH	Category	Price	Freight charges	Price including freight charges
KAH-5, galvanized	A	96,–	118,–	214,–
KAH-25, galvanized	A	109,–	118,–	227,–
KAH-60, galvanized	A	140,–	118,–	258,–

Sheet Metal Storage Units With Trays Type KBR	Category	Price	Freight charges	Price including freight charges
KBR 1, painted	A	5985,–	941,–	6926,–
KBR 2, painted	A	6207,–	on request	on request
KBR 3, painted	A	6667,–	on request	on request

Liftomat Type L/E	Category	Price	Freight charges	Price including freight charges
L/E 1300, painted	B	4908,–	331,–	5239,–
L/E 1300, hot-dip galvanized	B	5578,–	331,–	5909,–

Liftomat Type L/M	Category	Price	Freight charges	Price including freight charges
L/M 600, painted	B	3553,–	226,–	3779,–
L/M 600, hot-dip galvanized	B	4025,–	226,–	4251,–
L/M 1300, painted	B	3986,–	331,–	4317,–
L/M 1300, hot-dip galvanized	B	4569,–	331,–	4900,–

Prices in EUR, valid EXW DE-46354 Südlohn, DE-38820 Halberstadt, unpacked
Freight charges valid CPT Bulgaria, islands and oversea territories excluded

BAUER GmbH
Eichendorffstr. 62
46354 Südlohn, Germany

Tel. +49 2862 70 90
info@bauer-suedlohn.com
www.bauer-suedlohn.com

Geschäftsführer
Patrick Bauer, Pascal Bauer
Amtsgericht Coesfeld HRB 5259

TÜVNORD
TÜV NORD CERT GmbH
DIN EN ISO 9001
tuev-nord.de

Price List 0726 en-BG
Workspace Material Handling

Security Cage for Storage Type LBM	Category	Price	Freight charges	Price including freight charges
LBM 1500, hot-dip galvanized	A	2002,–	331,–	2333,–
LBM 3000, hot-dip galvanized	A	2747,–	582,–	3329,–
LBM 4500, hot-dip galvanized	A	3492,–	582,–	4074,–
LBM 6000, hot-dip galvanized	A	4232,–	763,–	4995,–

Wheelie Bin Tipping Station Type MKS	Category	Price	Freight charges	Price including freight charges
MKS-12V, painted	A	3745,–	226,–	3971,–
External Charger for 12 V electro-hydraulic constructions	A	201,–	15,–	216,–
MKS-230V, painted	A	3745,–	226,–	3971,–

Wheelie Bin Tipping Station Type MKS-F	Category	Price	Freight charges	Price including freight charges
MKS-F, painted	A	2459,–	226,–	2685,–

Wheelie Bin Tipping Station Type MKS-H	Category	Price	Freight charges	Price including freight charges
MKS-H, painted	A	2459,–	226,–	2685,–

Stillage Transport Cage Type MTP	Category	Price	Freight charges	Price including freight charges
MTP 2000, hot-dip galvanized	A	2196,–	331,–	2527,–
Tension belt	A	48,–	8,–	56,–
MTP 3000, hot-dip galvanized	A	2774,–	402,–	3176,–
Tension belt	A	48,–	8,–	56,–

Two-Wheeled Pallet Picker Type PZ	Category	Price	Freight charges	Price including freight charges
PZ, hot-dip galvanized	F	456,–	118,–	574,–

Tyre Fitting Equipment Type RM	Category	Price	Freight charges	Price including freight charges
RM, painted	F	458,–	118,–	576,–

Surround for Waste Bins Type SECOMAT	Category	Price	Freight charges	Price including freight charges
S 120-D, powder coated	B	682,–	138,–	820,–
S 120-K, powder coated	B	764,–	138,–	902,–
S 240-D, powder coated	B	782,–	138,–	920,–
S 240-K, powder coated	B	856,–	138,–	994,–
S1100, powder-coated	B	791,–	138,–	929,–
S1100-W, powder-coated	B	1040,–	226,–	1266,–
S1100-WT, powder-coated	B	1305,–	226,–	1531,–
S1100-WTB, powder-coated	B	1408,–	226,–	1634,–
S4USE, powder coated	C	2656,–	331,–	2987,–

Gas Cylinder Pallet Type SFP	Category	Price	Freight charges	Price including freight charges
SFP 4, hot-dip galvanized	C	346,–	138,–	484,–
SFP 8, hot-dip galvanized	C	460,–	226,–	686,–

Prices in EUR, valid EXW DE-46354 Südlohn, DE-38820 Halberstadt, unpacked
Freight charges valid CPT Bulgaria, islands and oversea territories excluded

BAUER GmbH
Eichendorffstr. 62
46354 Südlohn, Germany

Tel. +49 2862 70 90
info@bauer-suedlohn.com
www.bauer-suedlohn.com

Geschäftsführer
Patrick Bauer, Pascal Bauer
Amtsgericht Coesfeld HRB 5259

TÜVNORD
TÜV NORD CERT GmbH
DIN EN ISO 9001
tuev-nord.de

Price List 0726 en-BG
Workspace Material Handling

Loading Support Type VS	Category	Price	Freight charges	Price including freight charges
VS, painted	C	765,–	226,–	991,–

Prices in EUR, valid EXW DE-46354 Südlohn, DE-38820 Halberstadt, unpacked
Freight charges valid CPT Bulgaria, islands and oversea territories excluded

BAUER GmbH
Eichendorffstr. 62
46354 Südlohn, Germany

Tel. +49 2862 70 90
info@bauer-suedlohn.com
www.bauer-suedlohn.com

Geschäftsführer
Patrick Bauer, Pascal Bauer
Amtsgericht Coesfeld HRB 5259

TÜVNORD
TÜV NORD CERT GmbH
DIN EN ISO 9001
tuev-nord.de

Price List 0726 en-BG
Environment / Storage

Sump Trays Type SERIES 2000	Category	Price	Freight charges	Price including freight charges
2000, painted	B	250,–	138,–	388,–
2000, hot-dip galvanized	B	288,–	138,–	426,–
2002, painted	B	285,–	138,–	423,–
2002, hot-dip galvanized	B	322,–	138,–	460,–
2008, painted	B	250,–	138,–	388,–
2008, hot-dip galvanized	B	300,–	138,–	438,–
2010, painted	B	301,–	138,–	439,–
Drum Support FA 60-1, hot-dip galvanized	B	109,–	15,–	124,–
Drum Support FA 60-2, hot-dip galvanized	B	118,–	18,–	136,–
Drum Support FA 60-3, hot-dip galvanized	B	138,–	21,–	159,–
Drum Support FA 200-1, hot-dip galvanized	B	118,–	15,–	133,–
Can Shelf Type GR-A, galvanized	B	138,–	118,–	256,–
Can Shelf Type GR-B, galvanized	B	138,–	118,–	256,–
Can Shelf Type GR-C, galvanized	B	138,–	118,–	256,–
2010, hot-dip galvanized	B	351,–	138,–	489,–
Drum Support FA 60-1, hot-dip galvanized	B	109,–	15,–	124,–
Drum Support FA 60-2, hot-dip galvanized	B	118,–	18,–	136,–
Drum Support FA 60-3, hot-dip galvanized	B	138,–	21,–	159,–
Drum Support FA 200-1, hot-dip galvanized	B	118,–	15,–	133,–
Can Shelf Type GR-A, galvanized	B	138,–	118,–	256,–
Can Shelf Type GR-B, galvanized	B	138,–	118,–	256,–
Can Shelf Type GR-C, galvanized	B	138,–	118,–	256,–
2016, painted	B	262,–	138,–	400,–
2016, hot-dip galvanized	B	314,–	138,–	452,–
2018, painted	B	315,–	138,–	453,–
Drum Support FA 60-1, hot-dip galvanized	B	109,–	15,–	124,–
Drum Support FA 60-2, hot-dip galvanized	B	118,–	18,–	136,–
Drum Support FA 60-3, hot-dip galvanized	B	138,–	21,–	159,–
Drum Support FA 200-1, hot-dip galvanized	B	118,–	15,–	133,–
Can Shelf Type GR-A, galvanized	B	138,–	118,–	256,–
Can Shelf Type GR-B, galvanized	B	138,–	118,–	256,–
Can Shelf Type GR-C, galvanized	B	138,–	118,–	256,–
2018, hot-dip galvanized	B	365,–	138,–	503,–
Drum Support FA 60-1, hot-dip galvanized	B	109,–	15,–	124,–
Drum Support FA 60-2, hot-dip galvanized	B	118,–	18,–	136,–
Drum Support FA 60-3, hot-dip galvanized	B	138,–	21,–	159,–
Drum Support FA 200-1, hot-dip galvanized	B	118,–	15,–	133,–
Can Shelf Type GR-A, galvanized	B	138,–	118,–	256,–
Can Shelf Type GR-B, galvanized	B	138,–	118,–	256,–
Can Shelf Type GR-C, galvanized	B	138,–	118,–	256,–
2026, painted	B	262,–	138,–	400,–
2026, hot-dip galvanized	B	310,–	138,–	448,–

Prices in EUR, valid EXW DE-46354 Südlohn, DE-38820 Halberstadt, unpacked
Freight charges valid CPT Bulgaria, islands and oversea territories excluded

BAUER GmbH
Eichendorffstr. 62
46354 Südlohn, Germany

Tel. +49 2862 70 90
info@bauer-suedlohn.com
www.bauer-suedlohn.com

Geschäftsführer
Patrick Bauer, Pascal Bauer
Amtsgericht Coesfeld HRB 5259

TÜVNORD
TÜV NORD CERT GmbH
DIN EN ISO 9001
tuev-nord.de

Price List 0726 en-BG
Environment / Storage

Sump Trays Type SERIES 2000	Category	Price	Freight charges	Price including freight charges
2028, painted	B	366,–	138,–	504,–
Drum Support FA 60-1, hot-dip galvanized	B	109,–	15,–	124,–
Drum Support FA 60-2, hot-dip galvanized	B	118,–	18,–	136,–
Drum Support FA 60-3, hot-dip galvanized	B	138,–	21,–	159,–
Drum Support FA 200-1, hot-dip galvanized	B	118,–	15,–	133,–
Drum Support FA 200-2, hot-dip galvanized	B	138,–	22,–	160,–
Can Shelf Type GR-A, galvanized	B	138,–	118,–	256,–
Can Shelf Type GR-B, galvanized	B	138,–	118,–	256,–
Can Shelf Type GR-C, galvanized	B	138,–	118,–	256,–
2028, hot-dip galvanized	B	412,–	138,–	550,–
Drum Support FA 60-1, hot-dip galvanized	B	109,–	15,–	124,–
Drum Support FA 60-2, hot-dip galvanized	B	118,–	18,–	136,–
Drum Support FA 60-3, hot-dip galvanized	B	138,–	21,–	159,–
Drum Support FA 200-1, hot-dip galvanized	B	118,–	15,–	133,–
Drum Support FA 200-2, hot-dip galvanized	B	138,–	22,–	160,–
Can Shelf Type GR-A, galvanized	B	138,–	118,–	256,–
Can Shelf Type GR-B, galvanized	B	138,–	118,–	256,–
Can Shelf Type GR-C, galvanized	B	138,–	118,–	256,–
2030, painted	B	275,–	138,–	413,–
2030, hot-dip galvanized	B	321,–	138,–	459,–
2032, painted	B	378,–	138,–	516,–
Drum Support FA 60-1, hot-dip galvanized	B	109,–	15,–	124,–
Drum Support FA 60-2, hot-dip galvanized	B	118,–	18,–	136,–
Drum Support FA 60-3, hot-dip galvanized	B	138,–	21,–	159,–
Drum Support FA 200-1, hot-dip galvanized	B	118,–	15,–	133,–
Drum Support FA 200-2, hot-dip galvanized	B	138,–	22,–	160,–
Can Shelf Type GR-A, galvanized	B	138,–	118,–	256,–
Can Shelf Type GR-B, galvanized	B	138,–	118,–	256,–
Can Shelf Type GR-C, galvanized	B	138,–	118,–	256,–
2032, hot-dip galvanized	B	426,–	138,–	564,–
Drum Support FA 60-1, hot-dip galvanized	B	109,–	15,–	124,–
Drum Support FA 60-2, hot-dip galvanized	B	118,–	18,–	136,–
Drum Support FA 60-3, hot-dip galvanized	B	138,–	21,–	159,–
Drum Support FA 200-1, hot-dip galvanized	B	118,–	15,–	133,–
Drum Support FA 200-2, hot-dip galvanized	B	138,–	22,–	160,–
Can Shelf Type GR-A, galvanized	B	138,–	118,–	256,–
Can Shelf Type GR-B, galvanized	B	138,–	118,–	256,–
Can Shelf Type GR-C, galvanized	B	138,–	118,–	256,–
2040, painted	B	351,–	138,–	489,–
2040, hot-dip galvanized	B	426,–	138,–	564,–
2042, painted	B	455,–	226,–	681,–
Drum Support FA 60-1, hot-dip galvanized	B	109,–	15,–	124,–
Drum Support FA 60-2, hot-dip galvanized	B	118,–	18,–	136,–
Drum Support FA 60-3, hot-dip galvanized	B	138,–	21,–	159,–
Can Shelf Type GR-A, galvanized	B	138,–	118,–	256,–
Can Shelf Type GR-B, galvanized	B	138,–	118,–	256,–

Prices in EUR, valid EXW DE-46354 Südlohn, DE-38820 Halberstadt, unpacked
Freight charges valid CPT Bulgaria, islands and oversea territories excluded

BAUER GmbH
Eichendorffstr. 62
46354 Südlohn, Germany

Tel. +49 2862 70 90
info@bauer-suedlohn.com
www.bauer-suedlohn.com

Geschäftsführer
Patrick Bauer, Pascal Bauer
Amtsgericht Coesfeld HRB 5259

TÜVNORD
TÜV NORD CERT GmbH
DIN EN ISO 9001
tuev-nord.de

Price List 0726 en-BG
Environment / Storage

Sump Trays Type SERIES 2000	Category	Price	Freight charges	Price including freight charges
Can Shelf Type GR-C, galvanized	B	138,–	118,–	256,–
2042, hot-dip galvanized	B	529,–	226,–	755,–
Drum Support FA 60-1, hot-dip galvanized	B	109,–	15,–	124,–
Drum Support FA 60-2, hot-dip galvanized	B	118,–	18,–	136,–
Drum Support FA 60-3, hot-dip galvanized	B	138,–	21,–	159,–
Can Shelf Type GR-A, galvanized	B	138,–	118,–	256,–
Can Shelf Type GR-B, galvanized	B	138,–	118,–	256,–
Can Shelf Type GR-C, galvanized	B	138,–	118,–	256,–
2048, painted	B	271,–	138,–	409,–
2048, hot-dip galvanized	B	316,–	138,–	454,–
2050, painted	B	369,–	138,–	507,–
Drum Support FA 60-1, hot-dip galvanized	B	109,–	15,–	124,–
Drum Support FA 60-2, hot-dip galvanized	B	118,–	18,–	136,–
Drum Support FA 60-3, hot-dip galvanized	B	138,–	21,–	159,–
Can Shelf Type GR-A, galvanized	B	138,–	118,–	256,–
Can Shelf Type GR-B, galvanized	B	138,–	118,–	256,–
Can Shelf Type GR-C, galvanized	B	138,–	118,–	256,–
2050, hot-dip galvanized	B	414,–	138,–	552,–
Drum Support FA 60-1, hot-dip galvanized	B	109,–	15,–	124,–
Drum Support FA 60-2, hot-dip galvanized	B	118,–	18,–	136,–
Drum Support FA 60-3, hot-dip galvanized	B	138,–	21,–	159,–
Can Shelf Type GR-A, galvanized	B	138,–	118,–	256,–
Can Shelf Type GR-B, galvanized	B	138,–	118,–	256,–
Can Shelf Type GR-C, galvanized	B	138,–	118,–	256,–

Sump Trays Type SERIES 2000/SW	Category	Price	Freight charges	Price including freight charges
2002/SW, painted	B	427,–	138,–	565,–
2002/SW, hot-dip galvanized	B	464,–	138,–	602,–
2018/SW, painted	B	468,–	226,–	694,–
Drum Support FA 60-1, hot-dip galvanized	B	109,–	15,–	124,–
Drum Support FA 60-2, hot-dip galvanized	B	118,–	18,–	136,–
Drum Support FA 60-3, hot-dip galvanized	B	138,–	21,–	159,–
Drum Support FA 200-1, hot-dip galvanized	B	118,–	15,–	133,–
Can Shelf Type GR-A, galvanized	B	138,–	118,–	256,–
Can Shelf Type GR-B, galvanized	B	138,–	118,–	256,–
Can Shelf Type GR-C, galvanized	B	138,–	118,–	256,–
2018/SW, hot-dip galvanized	B	517,–	226,–	743,–
Drum Support FA 60-1, hot-dip galvanized	B	109,–	15,–	124,–
Drum Support FA 60-2, hot-dip galvanized	B	118,–	18,–	136,–
Drum Support FA 60-3, hot-dip galvanized	B	138,–	21,–	159,–
Drum Support FA 200-1, hot-dip galvanized	B	118,–	15,–	133,–
Can Shelf Type GR-A, galvanized	B	138,–	118,–	256,–
Can Shelf Type GR-B, galvanized	B	138,–	118,–	256,–
Can Shelf Type GR-C, galvanized	B	138,–	118,–	256,–
2032/SW, painted	B	552,–	226,–	778,–
Drum Support FA 60-1, hot-dip galvanized	B	109,–	15,–	124,–

Prices in EUR, valid EXW DE-46354 Südlohn, DE-38820 Halberstadt, unpacked
Freight charges valid CPT Bulgaria, islands and oversea territories excluded

BAUER GmbH
Eichendorffstr. 62
46354 Südlohn, Germany

Tel. +49 2862 70 90
info@bauer-suedlohn.com
www.bauer-suedlohn.com

Geschäftsführer
Patrick Bauer, Pascal Bauer
Amtsgericht Coesfeld HRB 5259

TÜVNORD
TÜV NORD CERT GmbH
DIN EN ISO 9001
tuev-nord.de

Price List 0726 en-BG
Environment / Storage

Sump Trays Type SERIES 2000/SW	Category	Price	Freight charges	Price including freight charges
Drum Support FA 60-2, hot-dip galvanized	B	118,–	18,–	136,–
Drum Support FA 60-3, hot-dip galvanized	B	138,–	21,–	159,–
Drum Support FA 200-1, hot-dip galvanized	B	118,–	15,–	133,–
Drum Support FA 200-2, hot-dip galvanized	B	138,–	22,–	160,–
Can Shelf Type GR-A, galvanized	B	138,–	118,–	256,–
Can Shelf Type GR-B, galvanized	B	138,–	118,–	256,–
Can Shelf Type GR-C, galvanized	B	138,–	118,–	256,–
2032/SW, hot-dip galvanized	B	600,–	226,–	826,–
Drum Support FA 60-1, hot-dip galvanized	B	109,–	15,–	124,–
Drum Support FA 60-2, hot-dip galvanized	B	118,–	18,–	136,–
Drum Support FA 60-3, hot-dip galvanized	B	138,–	21,–	159,–
Drum Support FA 200-1, hot-dip galvanized	B	118,–	15,–	133,–
Drum Support FA 200-2, hot-dip galvanized	B	138,–	22,–	160,–
Can Shelf Type GR-A, galvanized	B	138,–	118,–	256,–
Can Shelf Type GR-B, galvanized	B	138,–	118,–	256,–
Can Shelf Type GR-C, galvanized	B	138,–	118,–	256,–
2042/SW, painted	B	685,–	280,–	965,–
Drum Support FA 60-1, hot-dip galvanized	B	109,–	15,–	124,–
Drum Support FA 60-2, hot-dip galvanized	B	118,–	18,–	136,–
Drum Support FA 60-3, hot-dip galvanized	B	138,–	21,–	159,–
Can Shelf Type GR-A, galvanized	B	138,–	118,–	256,–
Can Shelf Type GR-B, galvanized	B	138,–	118,–	256,–
Can Shelf Type GR-C, galvanized	B	138,–	118,–	256,–
2042/SW, hot-dip galvanized	B	760,–	280,–	1040,–
Drum Support FA 60-1, hot-dip galvanized	B	109,–	15,–	124,–
Drum Support FA 60-2, hot-dip galvanized	B	118,–	18,–	136,–
Drum Support FA 60-3, hot-dip galvanized	B	138,–	21,–	159,–
Can Shelf Type GR-A, galvanized	B	138,–	118,–	256,–
Can Shelf Type GR-B, galvanized	B	138,–	118,–	256,–
Can Shelf Type GR-C, galvanized	B	138,–	118,–	256,–

Mobile Sump Trays Type SERIES 2000	Category	Price	Freight charges	Price including freight charges
2004, painted	B	590,–	138,–	728,–
Fixture and Tension Belt for 1 x 200 Litre Drum	B	48,–	9,–	57,–
2004, hot-dip galvanized	B	657,–	138,–	795,–
Fixture and Tension Belt for 1 x 200 Litre Drum	B	48,–	9,–	57,–
2020, painted	B	656,–	138,–	794,–
Fixture and Tension Belt for 2 x 200 Litre Drums	B	48,–	9,–	57,–
2020, hot-dip galvanized	B	717,–	138,–	855,–
Fixture and Tension Belt for 2 x 200 Litre Drums	B	48,–	9,–	57,–
2050 SR, painted	B	709,–	138,–	847,–
Fixture and Tension Belt for 3 x 200 Litre Drums	B	48,–	9,–	57,–
2050 SR, hot-dip galvanized	B	766,–	226,–	992,–
Fixture and Tension Belt for 3 x 200 Litre Drums	B	48,–	9,–	57,–

Prices in EUR, valid EXW DE-46354 Südlohn, DE-38820 Halberstadt, unpacked
Freight charges valid CPT Bulgaria, islands and oversea territories excluded

BAUER GmbH
Eichendorffstr. 62
46354 Südlohn, Germany

Tel. +49 2862 70 90
info@bauer-suedlohn.com
www.bauer-suedlohn.com

Geschäftsführer
Patrick Bauer, Pascal Bauer
Amtsgericht Coesfeld HRB 5259

TÜVNORD
TÜV NORD CERT GmbH
DIN EN ISO 9001
tuev-nord.de

Price List 0726 en-BG
Environment / Storage

Drum Shelves with Sump Trays Type SERIES 3000	Category	Price	Freight charges	Price including freight charges
3000, hot-dip galvanized	B	1091,–	226,–	1317,–
Retainer Bar	B	48,–	12,–	60,–
Rotating Support RA 200, hot-dip galvanized	B	97,–	10,–	107,–
Can Stand Type GS, hot-dip galvanized	B	65,–	18,–	83,–
Crash Guard	B	75,–	9,–	84,–
3001, hot-dip galvanized	B	919,–	226,–	1145,–
Retainer Bar	B	48,–	12,–	60,–
Rotating Support RA 200, hot-dip galvanized	B	97,–	10,–	107,–
Can Stand Type GS, hot-dip galvanized	B	65,–	18,–	83,–
Crash Guard	B	75,–	9,–	84,–
3002, hot-dip galvanized	B	1299,–	280,–	1579,–
Retainer Bar	B	48,–	12,–	60,–
Rotating Support RA 200, hot-dip galvanized	B	97,–	10,–	107,–
Can Stand Type GS, hot-dip galvanized	B	65,–	18,–	83,–
Crash Guard	B	75,–	9,–	84,–
3003, hot-dip galvanized	B	1101,–	280,–	1381,–
Retainer Bar	B	48,–	12,–	60,–
Rotating Support RA 200, hot-dip galvanized	B	97,–	10,–	107,–
Can Stand Type GS, hot-dip galvanized	B	65,–	18,–	83,–
Crash Guard	B	75,–	9,–	84,–
3004, hot-dip galvanized	B	1344,–	226,–	1570,–
Retainer Bar	B	48,–	12,–	60,–
Rotating Support RA 60, hot-dip galvanized	B	97,–	9,–	106,–
Can Stand Type GS, hot-dip galvanized	B	65,–	18,–	83,–
Crash Guard	B	75,–	9,–	84,–
3005, hot-dip galvanized	B	1216,–	226,–	1442,–
Retainer Bar	B	48,–	12,–	60,–
Rotating Support RA 60, hot-dip galvanized	B	97,–	9,–	106,–
Can Stand Type GS, hot-dip galvanized	B	65,–	18,–	83,–
Crash Guard	B	75,–	9,–	84,–
3006, hot-dip galvanized	B	1697,–	384,–	2081,–
Retainer Bar	B	48,–	12,–	60,–
Rotating Support RA 60, hot-dip galvanized	B	97,–	9,–	106,–
Can Stand Type GS, hot-dip galvanized	B	65,–	18,–	83,–
Crash Guard	B	75,–	9,–	84,–
3007, hot-dip galvanized	B	1449,–	280,–	1729,–
Retainer Bar	B	48,–	12,–	60,–
Rotating Support RA 60, hot-dip galvanized	B	97,–	9,–	106,–
Can Stand Type GS, hot-dip galvanized	B	65,–	18,–	83,–
Crash Guard	B	75,–	9,–	84,–
3010, hot-dip galvanized	B	1288,–	280,–	1568,–
Retainer Bar	B	48,–	12,–	60,–
Rotating Support RA 200, hot-dip galvanized	B	97,–	10,–	107,–
Can Stand Type GS, hot-dip galvanized	B	65,–	18,–	83,–
Crash Guard	B	75,–	9,–	84,–
3011, hot-dip galvanized	B	1071,–	280,–	1351,–

Prices in EUR, valid EXW DE-46354 Südlohn, DE-38820 Halberstadt, unpacked
Freight charges valid CPT Bulgaria, islands and oversea territories excluded

BAUER GmbH
Eichendorffstr. 62
46354 Südlohn, Germany

Tel. +49 2862 70 90
info@bauer-suedlohn.com
www.bauer-suedlohn.com

Geschäftsführer
Patrick Bauer, Pascal Bauer
Amtsgericht Coesfeld HRB 5259

TÜVNORD
TÜV NORD CERT GmbH
DIN EN ISO 9001
tuev-nord.de

Price List 0726 en-BG
Environment / Storage

Drum Shelves with Sump Trays Type SERIES 3000	Category	Price	Freight charges	Price including freight charges
Retainer Bar	B	48,–	12,–	60,–
Rotating Support RA 200, hot-dip galvanized	B	97,–	10,–	107,–
Can Stand Type GS, hot-dip galvanized	B	65,–	18,–	83,–
Crash Guard	B	75,–	9,–	84,–

Small Can Shelves with Sumps Type SERIES 3000	Category	Price	Freight charges	Price including freight charges
3017-4E, galvanized	B	478,–	138,–	616,–
3018-4E, galvanized	B	397,–	138,–	535,–
3019-4E, galvanized	B	576,–	226,–	802,–
3020-4E, galvanized	B	493,–	226,–	719,–
3021-4E, galvanized	B	719,–	226,–	945,–
3022-4E, galvanized	B	626,–	138,–	764,–
3023-4E, galvanized	B	1162,–	280,–	1442,–
3024-4E, galvanized	B	968,–	280,–	1248,–

Shelves Type AG	Category	Price	Freight charges	Price including freight charges
AG 60-1, hot-dip galvanized	B	112,–	12,–	124,–
AG 60-2, hot-dip galvanized	B	117,–	14,–	131,–
AG 60-3, hot-dip galvanized	B	126,–	15,–	141,–

Sump Tray Type AM	Category	Price	Freight charges	Price including freight charges
AM-1, painted	B	335,–	138,–	473,–
AM-1, hot-dip galvanized	B	379,–	138,–	517,–
AM-2, painted	B	370,–	138,–	508,–
Drum Support FA 60-1, hot-dip galvanized	B	109,–	15,–	124,–
Drum Support FA 60-2, hot-dip galvanized	B	118,–	18,–	136,–
Drum Support FA 60-3, hot-dip galvanized	B	138,–	21,–	159,–
Drum Support FA 200-1, hot-dip galvanized	B	118,–	15,–	133,–
Can Shelf Type GR-A, galvanized	B	138,–	118,–	256,–
Can Shelf Type GR-B, galvanized	B	138,–	118,–	256,–
Can Shelf Type GR-C, galvanized	B	138,–	118,–	256,–
AM-2, hot-dip galvanized	B	427,–	138,–	565,–
Drum Support FA 60-1, hot-dip galvanized	B	109,–	15,–	124,–
Drum Support FA 60-2, hot-dip galvanized	B	118,–	18,–	136,–
Drum Support FA 60-3, hot-dip galvanized	B	138,–	21,–	159,–
Drum Support FA 200-1, hot-dip galvanized	B	118,–	15,–	133,–
Can Shelf Type GR-A, galvanized	B	138,–	118,–	256,–
Can Shelf Type GR-B, galvanized	B	138,–	118,–	256,–
Can Shelf Type GR-C, galvanized	B	138,–	118,–	256,–
AM-4/A, painted	B	443,–	138,–	581,–
Drum Support FA 60-1, hot-dip galvanized	B	109,–	15,–	124,–
Drum Support FA 60-2, hot-dip galvanized	B	118,–	18,–	136,–
Drum Support FA 60-3, hot-dip galvanized	B	138,–	21,–	159,–
Drum Support FA 200-1, hot-dip galvanized	B	118,–	15,–	133,–
Drum Support FA 200-2, hot-dip galvanized	B	138,–	22,–	160,–

Prices in EUR, valid EXW DE-46354 Südlohn, DE-38820 Halberstadt, unpacked
Freight charges valid CPT Bulgaria, islands and oversea territories excluded

BAUER GmbH
Eichendorffstr. 62
46354 Südlohn, Germany

Tel. +49 2862 70 90
info@bauer-suedlohn.com
www.bauer-suedlohn.com

Geschäftsführer
Patrick Bauer, Pascal Bauer
Amtsgericht Coesfeld HRB 5259

TÜVNORD
TÜV NORD CERT GmbH
DIN EN ISO 9001
tuev-nord.de

Price List 0726 en-BG
Environment / Storage

Sump Tray Type AM	Category	Price	Freight charges	Price including freight charges
Can Shelf Type GR-A, galvanized	B	138,–	118,–	256,–
Can Shelf Type GR-B, galvanized	B	138,–	118,–	256,–
Can Shelf Type GR-C, galvanized	B	138,–	118,–	256,–
AM-4/A, hot-dip galvanized	B	499,–	226,–	725,–
Drum Support FA 60-1, hot-dip galvanized	B	109,–	15,–	124,–
Drum Support FA 60-2, hot-dip galvanized	B	118,–	18,–	136,–
Drum Support FA 60-3, hot-dip galvanized	B	138,–	21,–	159,–
Drum Support FA 200-1, hot-dip galvanized	B	118,–	15,–	133,–
Drum Support FA 200-2, hot-dip galvanized	B	138,–	22,–	160,–
Can Shelf Type GR-A, galvanized	B	138,–	118,–	256,–
Can Shelf Type GR-B, galvanized	B	138,–	118,–	256,–
Can Shelf Type GR-C, galvanized	B	138,–	118,–	256,–
AM-4/B, painted	B	532,–	226,–	758,–
Drum Support FA 60-1, hot-dip galvanized	B	109,–	15,–	124,–
Drum Support FA 60-2, hot-dip galvanized	B	118,–	18,–	136,–
Drum Support FA 60-3, hot-dip galvanized	B	138,–	21,–	159,–
Can Shelf Type GR-A, galvanized	B	138,–	118,–	256,–
Can Shelf Type GR-B, galvanized	B	138,–	118,–	256,–
Can Shelf Type GR-C, galvanized	B	138,–	118,–	256,–
AM-4/B, hot-dip galvanized	B	624,–	226,–	850,–
Drum Support FA 60-1, hot-dip galvanized	B	109,–	15,–	124,–
Drum Support FA 60-2, hot-dip galvanized	B	118,–	18,–	136,–
Drum Support FA 60-3, hot-dip galvanized	B	138,–	21,–	159,–
Can Shelf Type GR-A, galvanized	B	138,–	118,–	256,–
Can Shelf Type GR-B, galvanized	B	138,–	118,–	256,–
Can Shelf Type GR-C, galvanized	B	138,–	118,–	256,–

Sump Tray Type AO	Category	Price	Freight charges	Price including freight charges
AO-1, painted	B	292,–	138,–	430,–
AO-1, hot-dip galvanized	B	337,–	138,–	475,–
AO-2, painted	B	310,–	138,–	448,–
AO-2, hot-dip galvanized	B	367,–	138,–	505,–
AO-4/A, painted	B	322,–	138,–	460,–
AO-4/A, hot-dip galvanized	B	378,–	138,–	516,–
AO-4/B, painted	B	412,–	138,–	550,–
AO-4/B, hot-dip galvanized	B	500,–	138,–	638,–

Sump Tray Type AW	Category	Price	Freight charges	Price including freight charges
AW 450, painted	B	641,–	226,–	867,–
AW 450, hot-dip galvanized	B	795,–	226,–	1021,–
AW 800, painted	B	667,–	226,–	893,–
AW 800, hot-dip galvanized	B	831,–	226,–	1057,–
AW 1000, painted	B	672,–	226,–	898,–
AW 1000, hot-dip galvanized	B	838,–	226,–	1064,–
AW 1000-2, painted	B	861,–	384,–	1245,–

Prices in EUR, valid EXW DE-46354 Südlohn, DE-38820 Halberstadt, unpacked
Freight charges valid CPT Bulgaria, islands and oversea territories excluded

BAUER GmbH
Eichendorffstr. 62
46354 Südlohn, Germany

Tel. +49 2862 70 90
info@bauer-suedlohn.com
www.bauer-suedlohn.com

Geschäftsführer
Patrick Bauer, Pascal Bauer
Amtsgericht Coesfeld HRB 5259

TÜVNORD
TÜV NORD CERT GmbH
DIN EN ISO 9001
tuev-nord.de

Price List 0726 en-BG
Environment / Storage

Sump Tray Type AW	Category	Price	Freight charges	Price including freight charges
AW 1000-2, hot-dip galvanized	B	966,–	384,–	1350,–
AW 1000-3, painted	B	1524,–	384,–	1908,–
AW 1000-3, hot-dip galvanized	B	1641,–	455,–	2096,–
AW 1000-10F, painted	B	1032,–	384,–	1416,–
AW 1000-10F, hot-dip galvanized	B	1195,–	384,–	1579,–

Sump Tray Type AW/SW	Category	Price	Freight charges	Price including freight charges
AW 450/SW, painted	B	844,–	226,–	1070,–
AW 450/SW, hot-dip galvanized	B	998,–	331,–	1329,–
AW 800/SW, painted	B	869,–	331,–	1200,–
AW 800/SW, hot-dip galvanized	B	1032,–	331,–	1363,–
AW 1000/SW, painted	B	874,–	331,–	1205,–
AW 1000/SW, hot-dip galvanized	B	1042,–	331,–	1373,–
AW 1000-2/SW, painted	B	1091,–	384,–	1475,–
AW 1000-2/SW, hot-dip galvanized	B	1196,–	455,–	1651,–
AW 1000-3/SW, painted	B	1787,–	on request	on request
AW 1000-3/SW, hot-dip galvanized	B	2121,–	on request	on request
AW 1000-10F/SW, painted	B	1387,–	455,–	1842,–
AW 1000-10F/SW, hot-dip galvanized	B	1548,–	455,–	2003,–

Mobile Sump Tray AW 60-1 SR	Category	Price	Freight charges	Price including freight charges
AW 60-1 SR, painted	B	325,–	138,–	463,–
Fixture and Tension belt for 2 x 60 Litre Drums	B	45,–	8,–	53,–
AW 60-1 SR, hot-dip galvanized	B	345,–	138,–	483,–
Fixture and Tension belt for 2 x 60 Litre Drums	B	45,–	8,–	53,–

Mobile Sump Tray AW 60-1 SRF	Category	Price	Freight charges	Price including freight charges
AW 60-1 SRF, painted	B	429,–	138,–	567,–
AW 60-1 SRF, hot-dip galvanized	B	451,–	138,–	589,–

Sump Tray Type AW 60	Category	Price	Freight charges	Price including freight charges
AW 60-1, painted	B	176,–	118,–	294,–
Grid GR 60-1, hot-dip galvanized	B	23,–	8,–	31,–
Drum Suppport FA 60-A, galvanized	B	25,–	8,–	33,–
Rotating Support RA 60-A, hot-dip galvanized	B	97,–	9,–	106,–
AG 60-1, hot-dip galvanized	B	112,–	12,–	124,–
Canister Stand AB, galvanized	B	19,–	8,–	27,–
Castor Set, polyamide, Load capacity 375 kg / castor set	B	86,–	15,–	101,–
AW 60-1, hot-dip galvanized	B	189,–	118,–	307,–
Grid GR 60-1, hot-dip galvanized	B	23,–	8,–	31,–
Drum Suppport FA 60-A, galvanized	B	25,–	8,–	33,–
Rotating Support RA 60-A, hot-dip galvanized	B	97,–	9,–	106,–
AG 60-1, hot-dip galvanized	B	112,–	12,–	124,–
Canister Stand AB, galvanized	B	19,–	8,–	27,–
Castor Set, polyamide, Load capacity 375 kg / castor set	B	86,–	15,–	101,–

Prices in EUR, valid EXW DE-46354 Südlohn, DE-38820 Halberstadt, unpacked
Freight charges valid CPT Bulgaria, islands and oversea territories excluded

BAUER GmbH
Eichendorffstr. 62
46354 Südlohn, Germany

Tel. +49 2862 70 90
info@bauer-suedlohn.com
www.bauer-suedlohn.com

Geschäftsführer
Patrick Bauer, Pascal Bauer
Amtsgericht Coesfeld HRB 5259

TÜVNORD
TÜV NORD CERT GmbH
DIN EN ISO 9001
tuev-nord.de

Price List 0726 en-BG
Environment / Storage

Sump Tray Type AW 60	Category	Price	Freight charges	Price including freight charges
AW 60-2, painted	B	177,–	138,–	315,–
Grid GR 60-2, hot-dip galvanized	B	27,–	12,–	39,–
Drum Suppport FA 60-A, galvanized	B	25,–	8,–	33,–
Rotating Support RA 60-A, hot-dip galvanized	B	97,–	9,–	106,–
AG 60-2, hot-dip galvanized	B	117,–	14,–	131,–
Canister Stand AB, galvanized	B	19,–	8,–	27,–
Castor Set, polyamide, Load capacity 375 kg / castor set	B	86,–	15,–	101,–
AW 60-2, hot-dip galvanized	B	195,–	138,–	333,–
Grid GR 60-2, hot-dip galvanized	B	27,–	12,–	39,–
Drum Suppport FA 60-A, galvanized	B	25,–	8,–	33,–
Rotating Support RA 60-A, hot-dip galvanized	B	97,–	9,–	106,–
AG 60-2, hot-dip galvanized	B	117,–	14,–	131,–
Canister Stand AB, galvanized	B	19,–	8,–	27,–
Castor Set, polyamide, Load capacity 375 kg / castor set	B	86,–	15,–	101,–
AW 60-3, painted	B	193,–	138,–	331,–
Grid GR 60-3, hot-dip galvanized	B	40,–	14,–	54,–
Drum Suppport FA 60-A, galvanized	B	25,–	8,–	33,–
Rotating Support RA 60-A, hot-dip galvanized	B	97,–	9,–	106,–
AG 60-3, hot-dip galvanized	B	126,–	15,–	141,–
Canister Stand AB, galvanized	B	19,–	8,–	27,–
Castor Set, polyamide, Load capacity 375 kg / castor set	B	86,–	15,–	101,–
AW 60-3, hot-dip galvanized	B	217,–	138,–	355,–
Grid GR 60-3, hot-dip galvanized	B	40,–	14,–	54,–
Drum Suppport FA 60-A, galvanized	B	25,–	8,–	33,–
Rotating Support RA 60-A, hot-dip galvanized	B	97,–	9,–	106,–
AG 60-3, hot-dip galvanized	B	126,–	15,–	141,–
Canister Stand AB, galvanized	B	19,–	8,–	27,–
Castor Set, polyamide, Load capacity 375 kg / castor set	B	86,–	15,–	101,–

Sump Tray Type AW 60/M	Category	Price	Freight charges	Price including freight charges
AW 60-1/M, painted	B	196,–	138,–	334,–
Drum Suppport FA 60-A, galvanized	B	25,–	8,–	33,–
Rotating Support RA 60-A, hot-dip galvanized	B	97,–	9,–	106,–
AG 60-1, hot-dip galvanized	B	112,–	12,–	124,–
Canister Stand AB, galvanized	B	19,–	8,–	27,–
Castor Set, polyamide, Load capacity 375 kg / castor set	B	86,–	15,–	101,–
AW 60-1/M, hot-dip galvanized	B	211,–	138,–	349,–
Drum Suppport FA 60-A, galvanized	B	25,–	8,–	33,–
Rotating Support RA 60-A, hot-dip galvanized	B	97,–	9,–	106,–
AG 60-1, hot-dip galvanized	B	112,–	12,–	124,–
Canister Stand AB, galvanized	B	19,–	8,–	27,–
Castor Set, polyamide, Load capacity 375 kg / castor set	B	86,–	15,–	101,–
AW 60-2/M, painted	B	203,–	138,–	341,–
Drum Suppport FA 60-A, galvanized	B	25,–	8,–	33,–
Drum Support FA 60-2, hot-dip galvanized	B	118,–	18,–	136,–
Rotating Support RA 60-A, hot-dip galvanized	B	97,–	9,–	106,–

Prices in EUR, valid EXW DE-46354 Südlohn, DE-38820 Halberstadt, unpacked
Freight charges valid CPT Bulgaria, islands and oversea territories excluded

BAUER GmbH
Eichendorffstr. 62
46354 Südlohn, Germany

Tel. +49 2862 70 90
info@bauer-suedlohn.com
www.bauer-suedlohn.com

Geschäftsführer
Patrick Bauer, Pascal Bauer
Amtsgericht Coesfeld HRB 5259

TÜVNORD
TÜV NORD CERT GmbH
DIN EN ISO 9001
tuev-nord.de

Price List 0726 en-BG
Environment / Storage

Sump Tray Type AW 60/M	Category	Price	Freight charges	Price including freight charges
AG 60-2, hot-dip galvanized	B	117,–	14,–	131,–
Canister Stand AB, galvanized	B	19,–	8,–	27,–
Castor Set, polyamide, Load capacity 375 kg / castor set	B	86,–	15,–	101,–
AW 60-2/M, hot-dip galvanized	B	221,–	138,–	359,–
Drum Suppport FA 60-A, galvanized	B	25,–	8,–	33,–
Drum Support FA 60-2, hot-dip galvanized	B	118,–	18,–	136,–
Rotating Support RA 60-A, hot-dip galvanized	B	97,–	9,–	106,–
AG 60-2, hot-dip galvanized	B	117,–	14,–	131,–
Canister Stand AB, galvanized	B	19,–	8,–	27,–
Castor Set, polyamide, Load capacity 375 kg / castor set	B	86,–	15,–	101,–
AW 60-3/M, painted	B	232,–	138,–	370,–
Drum Suppport FA 60-A, galvanized	B	25,–	8,–	33,–
Drum Support FA 60-2, hot-dip galvanized	B	118,–	18,–	136,–
Drum Support FA 60-3, hot-dip galvanized	B	138,–	21,–	159,–
Rotating Support RA 60-A, hot-dip galvanized	B	97,–	9,–	106,–
AG 60-3, hot-dip galvanized	B	126,–	15,–	141,–
Canister Stand AB, galvanized	B	19,–	8,–	27,–
Castor Set, polyamide, Load capacity 375 kg / castor set	B	86,–	15,–	101,–
AW 60-3/M, hot-dip galvanized	B	254,–	138,–	392,–
Drum Suppport FA 60-A, galvanized	B	25,–	8,–	33,–
Drum Support FA 60-2, hot-dip galvanized	B	118,–	18,–	136,–
Drum Support FA 60-3, hot-dip galvanized	B	138,–	21,–	159,–
Rotating Support RA 60-A, hot-dip galvanized	B	97,–	9,–	106,–
AG 60-3, hot-dip galvanized	B	126,–	15,–	141,–
Canister Stand AB, galvanized	B	19,–	8,–	27,–
Castor Set, polyamide, Load capacity 375 kg / castor set	B	86,–	15,–	101,–

Sump Tray Type AW/PE	Category	Price	Freight charges	Price including freight charges
AW-1/PE, painted	B	658,–	138,–	796,–
AW-1/PE, hot-dip galvanized	B	688,–	138,–	826,–
AW-2/PE, painted	B	721,–	138,–	859,–
Drum Support FA 60-1, hot-dip galvanized	B	109,–	15,–	124,–
Drum Support FA 60-2, hot-dip galvanized	B	118,–	18,–	136,–
Drum Support FA 60-3, hot-dip galvanized	B	138,–	21,–	159,–
Drum Support FA 200-1, hot-dip galvanized	B	118,–	15,–	133,–
Can Shelf Type GR-A, galvanized	B	138,–	118,–	256,–
Can Shelf Type GR-B, galvanized	B	138,–	118,–	256,–
Can Shelf Type GR-C, galvanized	B	138,–	118,–	256,–
AW-2/PE, hot-dip galvanized	B	757,–	138,–	895,–
Drum Support FA 60-1, hot-dip galvanized	B	109,–	15,–	124,–
Drum Support FA 60-2, hot-dip galvanized	B	118,–	18,–	136,–
Drum Support FA 60-3, hot-dip galvanized	B	138,–	21,–	159,–
Drum Support FA 200-1, hot-dip galvanized	B	118,–	15,–	133,–
Can Shelf Type GR-A, galvanized	B	138,–	118,–	256,–
Can Shelf Type GR-B, galvanized	B	138,–	118,–	256,–
Can Shelf Type GR-C, galvanized	B	138,–	118,–	256,–

Prices in EUR, valid EXW DE-46354 Südlohn, DE-38820 Halberstadt, unpacked
Freight charges valid CPT Bulgaria, islands and oversea territories excluded

BAUER GmbH
Eichendorffstr. 62
46354 Südlohn, Germany

Tel. +49 2862 70 90
info@bauer-suedlohn.com
www.bauer-suedlohn.com

Geschäftsführer
Patrick Bauer, Pascal Bauer
Amtsgericht Coesfeld HRB 5259

TÜVNORD
TÜV NORD CERT GmbH
DIN EN ISO 9001
tuev-nord.de

Price List 0726 en-BG
Environment / Storage

Sump Tray Type AW/PE	Category	Price	Freight charges	Price including freight charges
AW-4/A/PE, painted	B	818,–	226,–	1044,–
Drum Support FA 60-1, hot-dip galvanized	B	109,–	15,–	124,–
Drum Support FA 60-2, hot-dip galvanized	B	118,–	18,–	136,–
Drum Support FA 60-3, hot-dip galvanized	B	138,–	21,–	159,–
Drum Support FA 200-1, hot-dip galvanized	B	118,–	15,–	133,–
Drum Support FA 200-2, hot-dip galvanized	B	138,–	22,–	160,–
Can Shelf Type GR-A, galvanized	B	138,–	118,–	256,–
Can Shelf Type GR-B, galvanized	B	138,–	118,–	256,–
Can Shelf Type GR-C, galvanized	B	138,–	118,–	256,–
AW-4/A/PE, hot-dip galvanized	B	859,–	226,–	1085,–
Drum Support FA 60-1, hot-dip galvanized	B	109,–	15,–	124,–
Drum Support FA 60-2, hot-dip galvanized	B	118,–	18,–	136,–
Drum Support FA 60-3, hot-dip galvanized	B	138,–	21,–	159,–
Drum Support FA 200-1, hot-dip galvanized	B	118,–	15,–	133,–
Drum Support FA 200-2, hot-dip galvanized	B	138,–	22,–	160,–
Can Shelf Type GR-A, galvanized	B	138,–	118,–	256,–
Can Shelf Type GR-B, galvanized	B	138,–	118,–	256,–
Can Shelf Type GR-C, galvanized	B	138,–	118,–	256,–
AW-4/B/PE, painted	B	1021,–	280,–	1301,–
Drum Support FA 60-1, hot-dip galvanized	B	109,–	15,–	124,–
Drum Support FA 60-2, hot-dip galvanized	B	118,–	18,–	136,–
Drum Support FA 60-3, hot-dip galvanized	B	138,–	21,–	159,–
Can Shelf Type GR-A, galvanized	B	138,–	118,–	256,–
Can Shelf Type GR-B, galvanized	B	138,–	118,–	256,–
Can Shelf Type GR-C, galvanized	B	138,–	118,–	256,–
AW-4/B/PE, hot-dip galvanized	B	1096,–	280,–	1376,–
Drum Support FA 60-1, hot-dip galvanized	B	109,–	15,–	124,–
Drum Support FA 60-2, hot-dip galvanized	B	118,–	18,–	136,–
Drum Support FA 60-3, hot-dip galvanized	B	138,–	21,–	159,–
Can Shelf Type GR-A, galvanized	B	138,–	118,–	256,–
Can Shelf Type GR-B, galvanized	B	138,–	118,–	256,–
Can Shelf Type GR-C, galvanized	B	138,–	118,–	256,–
AW 1000/PE, painted	B	1386,–	331,–	1717,–
AW 1000/PE, hot-dip galvanized	B	1575,–	331,–	1906,–
AW 1000-2/PE, painted	B	1700,–	384,–	2084,–
AW 1000-2/PE, hot-dip galvanized	B	1818,–	384,–	2202,–

Sump Trays AW 8-12	Category	Price	Freight charges	Price including freight charges
AW-8, painted	B	732,–	280,–	1012,–
AW-8, hot-dip galvanized	B	815,–	384,–	1199,–
AW-10, painted	B	904,–	384,–	1288,–
AW-10, hot-dip galvanized	B	1239,–	384,–	1623,–
AW-12, painted	B	1035,–	384,–	1419,–
AW-12, hot-dip galvanized	B	1431,–	384,–	1815,–

Prices in EUR, valid EXW DE-46354 Südlohn, DE-38820 Halberstadt, unpacked
Freight charges valid CPT Bulgaria, islands and oversea territories excluded

BAUER GmbH
Eichendorffstr. 62
46354 Südlohn, Germany

Tel. +49 2862 70 90
info@bauer-suedlohn.com
www.bauer-suedlohn.com

Geschäftsführer
Patrick Bauer, Pascal Bauer
Amtsgericht Coesfeld HRB 5259

TÜVNORD
TÜV NORD CERT GmbH
DIN EN ISO 9001
tuev-nord.de

Price List 0726 en-BG
Environment / Storage

Sump Tray Type AWA	Category	Price	Freight charges	Price including freight charges
AWA 1000, painted	B	864,–	226,–	1090,–
AWA 1000, hot-dip galvanized	B	1045,–	331,–	1376,–
AWA 1000-2, painted	B	1239,–	384,–	1623,–
AWA 1000-2, hot-dip galvanized	B	1374,–	384,–	1758,–
AWA 1000-3, painted	B	2254,–	455,–	2709,–
AWA 1000-3, hot-dip galvanized	B	2385,–	635,–	3020,–
AWA 21, painted	B	1048,–	384,–	1432,–
AWA 21, hot-dip galvanized	B	1182,–	384,–	1566,–
AWA 31, painted	B	1956,–	455,–	2411,–
AWA 31, hot-dip galvanized	B	2077,–	455,–	2532,–
AWA 32, painted	B	2127,–	455,–	2582,–
AWA 32, hot-dip galvanized	B	2250,–	455,–	2705,–

Sump Tray Type AWA/SW	Category	Price	Freight charges	Price including freight charges
AWA 1000/SW, painted	B	1064,–	331,–	1395,–
AWA 1000/SW, hot-dip galvanized	B	1246,–	331,–	1577,–
AWA 1000-2/SW, painted	B	1472,–	455,–	1927,–
AWA 1000-2/SW, hot-dip galvanized	B	1605,–	455,–	2060,–
AWA 1000-3/SW, painted	B	2518,–	on request	on request
AWA 1000-3/SW, hot-dip galvanized	B	2648,–	on request	on request
AWA 21/SW, painted	B	1278,–	455,–	1733,–
AWA 21/SW, hot-dip galvanized	B	1413,–	455,–	1868,–
AWA 31/SW, painted	B	2217,–	on request	on request
AWA 31/SW, hot-dip galvanized	B	2339,–	on request	on request
AWA 32/SW, painted	B	2388,–	on request	on request
AWA 32/SW, hot-dip galvanized	B	2512,–	on request	on request

Sump Tray Type AW-F	Category	Price	Freight charges	Price including freight charges
AW-F 1, painted	B	657,–	138,–	795,–
Fixture and Tension Belt for 1 x 200 Litre Drum	B	48,–	9,–	57,–
AW-F 1, hot-dip galvanized	B	780,–	138,–	918,–
Fixture and Tension Belt for 1 x 200 Litre Drum	B	48,–	9,–	57,–
AW-F 2, painted	B	688,–	138,–	826,–
Fixture and Tension Belt for 2 x 200 Litre Drums	B	48,–	9,–	57,–
AW-F 2, hot-dip galvanized	B	842,–	138,–	980,–
Fixture and Tension Belt for 2 x 200 Litre Drums	B	48,–	9,–	57,–

Ground Protection Spill Tray Type BSW	Category	Price	Freight charges	Price including freight charges
BSW 21, galvanized	B	449,–	226,–	675,–
Access Ramp AR 21, galvanized	B	166,–	22,–	188,–
Access Corner Piece AE 24, galvanized	B	130,–	10,–	140,–
Cross-Shaped Connector KV 24, galvanized	B	20,–	8,–	28,–
Tray Connecting Strip WV 21, galvanized	B	22,–	8,–	30,–
BSW 22, galvanized	B	590,–	226,–	816,–
Access Ramp AR 21, galvanized	B	166,–	22,–	188,–

Prices in EUR, valid EXW DE-46354 Südlohn, DE-38820 Halberstadt, unpacked
Freight charges valid CPT Bulgaria, islands and oversea territories excluded

BAUER GmbH
Eichendorffstr. 62
46354 Südlohn, Germany

Tel. +49 2862 70 90
info@bauer-suedlohn.com
www.bauer-suedlohn.com

Geschäftsführer
Patrick Bauer, Pascal Bauer
Amtsgericht Coesfeld HRB 5259

TÜVNORD
TÜV NORD CERT GmbH
DIN EN ISO 9001
tuev-nord.de

Price List 0726 en-BG
Environment / Storage

Ground Protection Spill Tray Type BSW	Category	Price	Freight charges	Price including freight charges
Access Ramp AR 22, galvanized	B	211,–	32,–	243,–
Access Corner Piece AE 24, galvanized	B	130,–	10,–	140,–
Cross-Shaped Connector KV 24, galvanized	B	20,–	8,–	28,–
Tray Connecting Strip WV 21, galvanized	B	22,–	8,–	30,–
Tray Connecting Strip WV 22, galvanized	B	24,–	8,–	32,–
BSW 23, galvanized	B	764,–	360,–	1124,–
Access Ramp AR 23, galvanized	B	300,–	191,–	491,–
Access Ramp AR 21, galvanized	B	166,–	22,–	188,–
Access Corner Piece AE 24, galvanized	B	130,–	10,–	140,–
Cross-Shaped Connector KV 24, galvanized	B	20,–	8,–	28,–
Tray Connecting Strip WV 21, galvanized	B	22,–	8,–	30,–
Tray Connecting Strip WV 23, galvanized	B	37,–	9,–	46,–
BSW 24, galvanized	B	1341,–	450,–	1791,–
Access Ramp AR 23, galvanized	B	300,–	191,–	491,–
Access Ramp AR 22, galvanized	B	211,–	32,–	243,–
Access Corner Piece AE 24, galvanized	B	130,–	10,–	140,–
Cross-Shaped Connector KV 24, galvanized	B	20,–	8,–	28,–
Tray Connecting Strip WV 22, galvanized	B	24,–	8,–	32,–
Tray Connecting Strip WV 23, galvanized	B	37,–	9,–	46,–
BSW 121, galvanized	B	199,–	118,–	317,–
Access Ramp AR 121, galvanized	B	163,–	22,–	185,–
Cross-Shaped Connector KV 24, galvanized	B	20,–	8,–	28,–
Tray Connecting Strip WV 121, galvanized	B	21,–	9,–	30,–
BSW 122, galvanized	B	243,–	138,–	381,–
Access Ramp AR 121, galvanized	B	163,–	22,–	185,–
Access Ramp AR 122, galvanized	B	275,–	36,–	311,–
Access Corner Piece AE 124, galvanized	B	261,–	21,–	282,–
Cross-Shaped Connector KV 24, galvanized	B	20,–	8,–	28,–
Tray Connecting Strip WV 121, galvanized	B	21,–	9,–	30,–
Tray Connecting Strip WV 122, galvanized	B	26,–	9,–	35,–
BSW 123, galvanized	B	339,–	138,–	477,–
Access Ramp AR 122, galvanized	B	275,–	36,–	311,–
Access Corner Piece AE 124, galvanized	B	261,–	21,–	282,–
Cross-Shaped Connector KV 24, galvanized	B	20,–	8,–	28,–
Tray Connecting Strip WV 122, galvanized	B	26,–	9,–	35,–
BSW 124, galvanized	B	553,–	226,–	779,–
Access Ramp AR 122, galvanized	B	275,–	36,–	311,–
Access Ramp AR 123, galvanized	B	338,–	226,–	564,–
Access Corner Piece AE 124, galvanized	B	261,–	21,–	282,–
Cross-Shaped Connector KV 24, galvanized	B	20,–	8,–	28,–
Tray Connecting Strip WV 122, galvanized	B	26,–	9,–	35,–
Tray Connecting Strip WV 123, galvanized	B	36,–	9,–	45,–
BSW 125, galvanized	B	426,–	280,–	706,–
Access Ramp AR 121, galvanized	B	163,–	22,–	185,–
Access Ramp AR 124, galvanized	B	392,–	280,–	672,–
Access Corner Piece AE 124, galvanized	B	261,–	21,–	282,–

Prices in EUR, valid EXW DE-46354 Südlohn, DE-38820 Halberstadt, unpacked
Freight charges valid CPT Bulgaria, islands and oversea territories excluded

BAUER GmbH
Eichendorffstr. 62
46354 Südlohn, Germany

Tel. +49 2862 70 90
info@bauer-suedlohn.com
www.bauer-suedlohn.com

Geschäftsführer
Patrick Bauer, Pascal Bauer
Amtsgericht Coesfeld HRB 5259

TÜVNORD
TÜV NORD CERT GmbH
DIN EN ISO 9001
tuev-nord.de

Price List 0726 en-BG
Environment / Storage

Ground Protection Spill Tray Type BSW	Category	Price	Freight charges	Price including freight charges
Cross-Shaped Connector KV 24, galvanized	B	20,–	8,–	28,–
Tray Connecting Strip WV 121, galvanized	B	21,–	9,–	30,–
Tray Connecting Strip WV 124, galvanized	B	49,–	9,–	58,–
BSW 126, galvanized	B	668,–	384,–	1052,–
Access Ramp AR 122, galvanized	B	275,–	36,–	311,–
Access Ramp AR 124, galvanized	B	392,–	280,–	672,–
Access Corner Piece AE 124, galvanized	B	261,–	21,–	282,–
Cross-Shaped Connector KV 24, galvanized	B	20,–	8,–	28,–
Tray Connecting Strip WV 122, galvanized	B	26,–	9,–	35,–
Tray Connecting Strip WV 124, galvanized	B	49,–	9,–	58,–

Polyethylene Bunded Spill Flooring Type BWP-PE	Category	Price	Freight charges	Price including freight charges
BWP-PE 150, made of robust polyethylene	B	316,–	138,–	454,–
Ramp Type BWR, robust polyethylene, black	B	222,–	12,–	234,–
Joining Element BWV 2, stainless steel 1.4301	B	29,–	9,–	38,–
BWP-PE 300, made of robust polyethylene	B	641,–	138,–	779,–
Ramp Type BWR, robust polyethylene, black	B	222,–	12,–	234,–
Joining Element BWV 4, stainless steel 1.4301	B	38,–	10,–	48,–

Polyethylene Bunded Spill Flooring Type BWPS-PE	Category	Price	Freight charges	Price including freight charges
BWPS-PE 300, made of robust polyethylene	B	786,–	191,–	977,–
Ramp Type BWR, robust polyethylene, black	B	222,–	12,–	234,–
Joining Element BWV 2, stainless steel 1.4301	B	29,–	9,–	38,–

Shelf Container Type CEH	Category	Price	Freight charges	Price including freight charges
CEH 29-2, painted	C	9142,–	on request	on request
CEH 29-2 IBC, painted	C	10076,–	on request	on request
CEH 36-2 IBC, painted	C	11727,–	on request	on request
CEH 38-2, painted	C	11719,–	on request	on request
CEH 59-2, painted	C	17352,–	on request	on request
CEH 59-2 IBC, painted	C	18629,–	on request	on request
CEH 75-2 IBC, painted	C	22081,–	on request	on request
CEH 81-2, painted	C	22524,–	on request	on request

Shelf Container Type CEN	Category	Price	Freight charges	Price including freight charges
CEN 29-2, painted	C	7714,–	on request	on request
Potential equalisation	C	184,–	0,–	184,–
CEN 29-2 IBC, painted	C	8421,–	on request	on request
Potential equalisation	C	184,–	0,–	184,–
CEN 29-2b, painted	C	13445,–	on request	on request
Potential equalisation	C	366,–	0,–	366,–
CEN 29-2b IBC, painted	C	14379,–	on request	on request
Potential equalisation	C	366,–	0,–	366,–
CEN 29-3, painted	C	12140,–	on request	on request
Potential equalisation	C	274,–	0,–	274,–

Prices in EUR, valid EXW DE-46354 Südlohn, DE-38820 Halberstadt, unpacked
Freight charges valid CPT Bulgaria, islands and oversea territories excluded

BAUER GmbH
Eichendorffstr. 62
46354 Südlohn, Germany

Tel. +49 2862 70 90
info@bauer-suedlohn.com
www.bauer-suedlohn.com

Geschäftsführer
Patrick Bauer, Pascal Bauer
Amtsgericht Coesfeld HRB 5259

TÜVNORD
TÜV NORD CERT GmbH
DIN EN ISO 9001
tuev-nord.de

Price List 0726 en-BG
Environment / Storage

Shelf Container Type CEN	Category	Price	Freight charges	Price including freight charges
CEN 29-3 IBC, painted	C	12917,–	on request	on request
Potential equalisation	C	274,–	0,–	274,–
CEN 29-3b, painted	C	19757,–	on request	on request
Potential equalisation	C	546,–	0,–	546,–
CEN 29-3b IBC, painted	C	20862,–	on request	on request
Potential equalisation	C	546,–	0,–	546,–
CEN 33-2 IBC, painted	C	9393,–	on request	on request
Potential equalisation	C	184,–	0,–	184,–
CEN 33-2b IBC, painted	C	15740,–	on request	on request
Potential equalisation	C	366,–	0,–	366,–
CEN 33-3 IBC, painted	C	13849,–	on request	on request
Potential equalisation	C	274,–	0,–	274,–
CEN 33-3b IBC, painted	C	22018,–	on request	on request
Potential equalisation	C	546,–	0,–	546,–
CEN 36-2, painted	C	9470,–	on request	on request
Potential equalisation	C	184,–	0,–	184,–
CEN 36-2b, painted	C	16110,–	on request	on request
Potential equalisation	C	366,–	0,–	366,–
CEN 36-3, painted	C	14046,–	on request	on request
Potential equalisation	C	274,–	0,–	274,–
CEN 36-3b, painted	C	22693,–	on request	on request
Potential equalisation	C	546,–	0,–	546,–
CEN 59-2, painted	C	12772,–	on request	on request
Potential equalisation	C	365,–	0,–	365,–
CEN 59-2 IBC, painted	C	13917,–	on request	on request
Potential equalisation	C	365,–	0,–	365,–
CEN 59-2b, painted	C	21982,–	on request	on request
Potential equalisation	C	729,–	0,–	729,–
CEN 59-2b IBC, painted	C	22754,–	on request	on request
Potential equalisation	C	729,–	0,–	729,–
CEN 59-3, painted	C	19663,–	on request	on request
Potential equalisation	C	545,–	0,–	545,–
CEN 59-3 IBC, painted	C	20812,–	on request	on request
Potential equalisation	C	545,–	0,–	545,–
CEN 59-3b, painted	C	31741,–	on request	on request
Potential equalisation	C	1089,–	0,–	1089,–
CEN 59-3b IBC, painted	C	33404,–	on request	on request
Potential equalisation	C	1089,–	0,–	1089,–
CEN 65-2 IBC, painted	C	15002,–	on request	on request
Potential equalisation	C	365,–	0,–	365,–
CEN 65-2b IBC, painted	C	25299,–	on request	on request
Potential equalisation	C	729,–	0,–	729,–
CEN 65-3 IBC, painted	C	21999,–	on request	on request
Potential equalisation	C	545,–	0,–	545,–
CEN 65-3b IBC, painted	C	35919,–	on request	on request
Potential equalisation	C	1089,–	0,–	1089,–

Prices in EUR, valid EXW DE-46354 Südlohn, DE-38820 Halberstadt, unpacked
Freight charges valid CPT Bulgaria, islands and oversea territories excluded

BAUER GmbH
Eichendorffstr. 62
46354 Südlohn, Germany

Tel. +49 2862 70 90
info@bauer-suedlohn.com
www.bauer-suedlohn.com

Geschäftsführer
Patrick Bauer, Pascal Bauer
Amtsgericht Coesfeld HRB 5259

TÜVNORD
TÜV NORD CERT GmbH
DIN EN ISO 9001
tuev-nord.de

Price List 0726 en-BG
Environment / Storage

Shelf Container Type CEN	Category	Price	Freight charges	Price including freight charges
CEN 75-2, painted	C	16004,–	on request	on request
Potential equalisation	C	365,–	0,–	365,–
CEN 75-2b, painted	C	26485,–	on request	on request
Potential equalisation	C	729,–	0,–	729,–
CEN 75-3, painted	C	23086,–	on request	on request
Potential equalisation	C	545,–	0,–	545,–
CEN 75-3b, painted	C	37480,–	on request	on request
Potential equalisation	C	1089,–	0,–	1089,–
CEN 81-2, painted	C	16788,–	on request	on request
Potential equalisation	C	365,–	0,–	365,–
CEN 81-2b, painted	C	27692,–	on request	on request
Potential equalisation	C	729,–	0,–	729,–
CEN 81-3, painted	C	24174,–	on request	on request
Potential equalisation	C	545,–	0,–	545,–
CEN 81-3b, painted	C	39119,–	on request	on request
Potential equalisation	C	1089,–	0,–	1089,–

Sump Tray for Skips Type CW	Category	Price	Freight charges	Price including freight charges
CW 1, painted	B	2952,–	on request	on request
CW 2, painted	B	3226,–	on request	on request
CW 3, painted	B	3722,–	on request	on request

Sump Tray Type ECO	Category	Price	Freight charges	Price including freight charges
ECO 1/200, painted	B	246,–	138,–	384,–
ECO 1/200, hot-dip galvanized	B	256,–	138,–	394,–
ECO 2/200, painted	B	261,–	138,–	399,–
ECO 2/200, hot-dip galvanized	B	270,–	138,–	408,–
ECO 4/200, painted	B	285,–	138,–	423,–
ECO 4/200, hot-dip galvanized	B	297,–	138,–	435,–
ECO 4/400, painted	B	354,–	138,–	492,–
ECO 4/400, hot-dip galvanized	B	370,–	138,–	508,–
ECO 1/1000, painted	B	632,–	226,–	858,–
ECO 1/1000, hot-dip galvanized	B	759,–	226,–	985,–
ECO 2/1000, painted	B	826,–	280,–	1106,–
ECO 2/1000, hot-dip galvanized	B	915,–	280,–	1195,–

Sump Tray Type ECO-A	Category	Price	Freight charges	Price including freight charges
ECO-A 1/1000, painted	B	831,–	226,–	1057,–
ECO-A 1/1000, hot-dip galvanized	B	971,–	226,–	1197,–
ECO-A 2/1000, painted	B	1221,–	384,–	1605,–
ECO-A 2/1000, hot-dip galvanized	B	1341,–	384,–	1725,–

Sump Tray Type ECO-S	Category	Price	Freight charges	Price including freight charges
ECO-S 2/200, hot-dip galvanized	B	3447,–	690,–	4137,–
ECO-S 4/200, hot-dip galvanized	B	4053,–	1050,–	5103,–

Prices in EUR, valid EXW DE-46354 Südlohn, DE-38820 Halberstadt, unpacked
Freight charges valid CPT Bulgaria, islands and oversea territories excluded

BAUER GmbH
Eichendorffstr. 62
46354 Südlohn, Germany

Tel. +49 2862 70 90
info@bauer-suedlohn.com
www.bauer-suedlohn.com

Geschäftsführer
Patrick Bauer, Pascal Bauer
Amtsgericht Coesfeld HRB 5259

TÜVNORD
TÜV NORD CERT GmbH
DIN EN ISO 9001
tuev-nord.de

Price List 0726 en-BG
Environment / Storage

Sump Tray Type ECO-S	Category	Price	Freight charges	Price including freight charges
ECO-S 4/400, hot-dip galvanized	B	5000,–	1050,–	6050,–

Suspended Sump with Polyethylene Inlay Type EHW PE	Category	Price	Freight charges	Price including freight charges
EHW 1800 PE, painted	B	909,–	226,–	1135,–
EHW 1800 PE, hot-dip galvanized	B	922,–	226,–	1148,–
EHW 2200 PE, painted	B	987,–	226,–	1213,–
EHW 2200 PE, hot-dip galvanized	B	1028,–	226,–	1254,–
EHW 2700 PE, painted	B	1144,–	384,–	1528,–
EHW 2700 PE, hot-dip galvanized	B	1211,–	384,–	1595,–
EHW 3300 PE, painted	B	1653,–	384,–	2037,–
EHW 3300 PE, hot-dip galvanized	B	1727,–	384,–	2111,–

Suspended Sump Type EHW	Category	Price	Freight charges	Price including freight charges
EHW 1800, painted	B	509,–	226,–	735,–
EHW 1800, hot-dip galvanized	B	521,–	226,–	747,–
EHW 2200, painted	B	564,–	226,–	790,–
EHW 2200, hot-dip galvanized	B	605,–	226,–	831,–
EHW 2700, painted	B	648,–	280,–	928,–
EHW 2700, hot-dip galvanized	B	717,–	280,–	997,–
EHW 3300, painted	B	1002,–	384,–	1386,–
EHW 3300, hot-dip galvanized	B	1076,–	384,–	1460,–
EHW 3600, painted	B	1050,–	384,–	1434,–
EHW 3600, hot-dip galvanized	B	1131,–	384,–	1515,–

Drum Pallet Type FP	Category	Price	Freight charges	Price including freight charges
FP 2, hot-dip galvanized	B	92,–	138,–	230,–

Drum Shelve Type FR	Category	Price	Freight charges	Price including freight charges
FR-1, hot-dip galvanized	B	293,–	138,–	431,–
Can Stand Type GS, hot-dip galvanized	B	65,–	18,–	83,–
Clip-on Rotating Support, galvanized	B	85,–	10,–	95,–
FR-2, hot-dip galvanized	B	375,–	138,–	513,–
Can Stand Type GS, hot-dip galvanized	B	65,–	18,–	83,–
Clip-on Rotating Support, galvanized	B	85,–	10,–	95,–
FR-3, hot-dip galvanized	B	419,–	138,–	557,–
Can Stand Type GS, hot-dip galvanized	B	65,–	18,–	83,–
Rotating Support RA 60, hot-dip galvanized	B	97,–	9,–	106,–

Sump Tray Type FRA	Category	Price	Freight charges	Price including freight charges
FRA-1, painted	B	310,–	138,–	448,–
Grid, hot-dip galvanized	B	67,–	16,–	83,–
FRA-1, hot-dip galvanized	B	367,–	138,–	505,–
Grid, hot-dip galvanized	B	67,–	16,–	83,–
FRA-2, painted	B	322,–	138,–	460,–
Grid, hot-dip galvanized	B	132,–	24,–	156,–

Prices in EUR, valid EXW DE-46354 Südlohn, DE-38820 Halberstadt, unpacked
Freight charges valid CPT Bulgaria, islands and oversea territories excluded

BAUER GmbH
Eichendorffstr. 62
46354 Südlohn, Germany

Tel. +49 2862 70 90
info@bauer-suedlohn.com
www.bauer-suedlohn.com

Geschäftsführer
Patrick Bauer, Pascal Bauer
Amtsgericht Coesfeld HRB 5259

TÜVNORD
TÜV NORD CERT GmbH
DIN EN ISO 9001
tuev-nord.de

Price List 0726 en-BG
Environment / Storage

Sump Tray Type FRA	Category	Price	Freight charges	Price including freight charges
FRA-2, hot-dip galvanized	B	378,–	138,–	516,–
Grid, hot-dip galvanized	B	132,–	24,–	156,–
FRA-3, painted	B	322,–	138,–	460,–
Grid, hot-dip galvanized	B	132,–	24,–	156,–
FRA-3, hot-dip galvanized	B	378,–	138,–	516,–
Grid, hot-dip galvanized	B	132,–	24,–	156,–

Drum Shelf Type FRE/M	Category	Price	Freight charges	Price including freight charges
FRE-1/M, hot-dip galvanized	B	225,–	21,–	246,–
Clip-on Rotating Support, galvanized	B	85,–	10,–	95,–
Can Stand Type GS, hot-dip galvanized	B	65,–	18,–	83,–
FRE-2/M, hot-dip galvanized	B	261,–	22,–	283,–
Clip-on Rotating Support, galvanized	B	85,–	10,–	95,–
Can Stand Type GS, hot-dip galvanized	B	65,–	18,–	83,–
FRE-3/M, hot-dip galvanized	B	279,–	27,–	306,–
Rotating Support RA 60, hot-dip galvanized	B	97,–	9,–	106,–
Can Stand Type GS, hot-dip galvanized	B	65,–	18,–	83,–

Can Shelf Type FRE-G/M	Category	Price	Freight charges	Price including freight charges
FRE-G1/M, hot-dip galvanized	B	236,–	27,–	263,–
FRE-G2/M, hot-dip galvanized	B	274,–	32,–	306,–

Can Shelf for Small Cans Type FRG	Category	Price	Freight charges	Price including freight charges
FRG, hot-dip galvanized	B	381,–	138,–	519,–

Drum Stacking Pallet Type FSP-D	Category	Price	Freight charges	Price including freight charges
FSP-1 D, lackiert	B	845,–	226,–	1071,–
FSP-1 D, hot-dip galvanized	B	1106,–	226,–	1332,–
FSP-2 D, lackiert	B	901,–	226,–	1127,–
FSP-2 D, hot-dip galvanized	B	1222,–	226,–	1448,–
FSP-4 D, lackiert	B	1170,–	226,–	1396,–
FSP-4 D, hot-dip galvanized	B	1615,–	226,–	1841,–

Drum Stacking Pallet Type FSP-G	Category	Price	Freight charges	Price including freight charges
FSP-1 G, lackiert	B	821,–	226,–	1047,–
FSP-1 G, hot-dip galvanized	B	1089,–	226,–	1315,–
FSP-2 G, painted	B	879,–	226,–	1105,–
FSP-2 G, hot-dip galvanized	B	1197,–	226,–	1423,–
FSP-4 G, painted	B	1148,–	331,–	1479,–
FSP-4 G, hot-dip galvanized	B	1587,–	331,–	1918,–

Drum Stacking Pallet Type FSP	Category	Price	Freight charges	Price including freight charges
FSP-1, painted	B	484,–	138,–	622,–
FSP-1, hot-dip galvanized	B	727,–	226,–	953,–
FSP-2, painted	B	655,–	226,–	881,–

Prices in EUR, valid EXW DE-46354 Südlohn, DE-38820 Halberstadt, unpacked
Freight charges valid CPT Bulgaria, islands and oversea territories excluded

BAUER GmbH
Eichendorffstr. 62
46354 Südlohn, Germany

Tel. +49 2862 70 90
info@bauer-suedlohn.com
www.bauer-suedlohn.com

Geschäftsführer
Patrick Bauer, Pascal Bauer
Amtsgericht Coesfeld HRB 5259

TÜVNORD
TÜV NORD CERT GmbH
DIN EN ISO 9001
tuev-nord.de

Price List 0726 en-BG
Environment / Storage

Drum Stacking Pallet Type FSP	Category	Price	Freight charges	Price including freight charges
FSP-2, hot-dip galvanized	B	913,–	226,–	1139,–
FSP-4, painted	B	746,–	226,–	972,–
FSP-4, hot-dip galvanized	B	1151,–	226,–	1377,–

Hazardous Materials Depot Type GD-A	Category	Price	Freight charges	Price including freight charges
GD-A, painted	C	762,–	226,–	988,–
Drum Support FA 60-1, hot-dip galvanized	B	109,–	15,–	124,–
Drum Support FA 60-2, hot-dip galvanized	B	118,–	18,–	136,–
Drum Support FA 60-3, hot-dip galvanized	B	138,–	21,–	159,–
Can Shelf Type GR-A, galvanized	B	138,–	118,–	256,–
Can Shelf Type GR-B, galvanized	B	138,–	118,–	256,–
Can Shelf Type GR-C, galvanized	B	138,–	118,–	256,–
GD-A, hot-dip galvanized	C	960,–	226,–	1186,–
Drum Support FA 60-1, hot-dip galvanized	B	109,–	15,–	124,–
Drum Support FA 60-2, hot-dip galvanized	B	118,–	18,–	136,–
Drum Support FA 60-3, hot-dip galvanized	B	138,–	21,–	159,–
Can Shelf Type GR-A, galvanized	B	138,–	118,–	256,–
Can Shelf Type GR-B, galvanized	B	138,–	118,–	256,–
Can Shelf Type GR-C, galvanized	B	138,–	118,–	256,–

Hazardous Materials Depot Type GD-B	Category	Price	Freight charges	Price including freight charges
GD-B, painted	C	1363,–	226,–	1589,–
Drum Support FA 60-1, hot-dip galvanized	B	109,–	15,–	124,–
Drum Support FA 60-2, hot-dip galvanized	B	118,–	18,–	136,–
Drum Support FA 60-3, hot-dip galvanized	B	138,–	21,–	159,–
Can Shelf Type GR-A, galvanized	B	138,–	118,–	256,–
Can Shelf Type GR-B, galvanized	B	138,–	118,–	256,–
Can Shelf Type GR-C, galvanized	B	138,–	118,–	256,–
GD-B, hot-dip galvanized	C	1625,–	226,–	1851,–
Drum Support FA 60-1, hot-dip galvanized	B	109,–	15,–	124,–
Drum Support FA 60-2, hot-dip galvanized	B	118,–	18,–	136,–
Drum Support FA 60-3, hot-dip galvanized	B	138,–	21,–	159,–
Can Shelf Type GR-A, galvanized	B	138,–	118,–	256,–
Can Shelf Type GR-B, galvanized	B	138,–	118,–	256,–
Can Shelf Type GR-C, galvanized	B	138,–	118,–	256,–

Hazardous Materials Depot Type GD-C	Category	Price	Freight charges	Price including freight charges
GD-C, painted	C	1163,–	226,–	1389,–
Drum Support FA 60-1, hot-dip galvanized	B	109,–	15,–	124,–
Drum Support FA 60-2, hot-dip galvanized	B	118,–	18,–	136,–
Drum Support FA 60-3, hot-dip galvanized	B	138,–	21,–	159,–
Can Shelf Type GR-A, galvanized	B	138,–	118,–	256,–
Can Shelf Type GR-B, galvanized	B	138,–	118,–	256,–
Can Shelf Type GR-C, galvanized	B	138,–	118,–	256,–
GD-C, hot-dip galvanized	C	1314,–	226,–	1540,–

Prices in EUR, valid EXW DE-46354 Südlohn, DE-38820 Halberstadt, unpacked
Freight charges valid CPT Bulgaria, islands and oversea territories excluded

BAUER GmbH
Eichendorffstr. 62
46354 Südlohn, Germany

Tel. +49 2862 70 90
info@bauer-suedlohn.com
www.bauer-suedlohn.com

Geschäftsführer
Patrick Bauer, Pascal Bauer
Amtsgericht Coesfeld HRB 5259

TÜVNORD
TÜV NORD CERT GmbH
DIN EN ISO 9001
tuev-nord.de

Price List 0726 en-BG
Environment / Storage

Hazardous Materials Depot Type GD-C	Category	Price	Freight charges	Price including freight charges
Drum Support FA 60-1, hot-dip galvanized	B	109,–	15,–	124,–
Drum Support FA 60-2, hot-dip galvanized	B	118,–	18,–	136,–
Drum Support FA 60-3, hot-dip galvanized	B	138,–	21,–	159,–
Can Shelf Type GR-A, galvanized	B	138,–	118,–	256,–
Can Shelf Type GR-B, galvanized	B	138,–	118,–	256,–
Can Shelf Type GR-C, galvanized	B	138,–	118,–	256,–

Hazardous Materials Depot Type GD-E	Category	Price	Freight charges	Price including freight charges
GD-E 2, galvanized	C	1562,–	331,–	1893,–
Drum Support FA 60-1, hot-dip galvanized	B	109,–	15,–	124,–
Drum Support FA 60-2, hot-dip galvanized	B	118,–	18,–	136,–
Drum Support FA 60-3, hot-dip galvanized	B	138,–	21,–	159,–
Can Shelf Type GR-A, galvanized	B	138,–	118,–	256,–
Can Shelf Type GR-B, galvanized	B	138,–	118,–	256,–
Can Shelf Type GR-C, galvanized	B	138,–	118,–	256,–
GD-E 4, galvanized	C	1907,–	402,–	2309,–
Drum Support FA 60-1, hot-dip galvanized	B	109,–	15,–	124,–
Drum Support FA 60-2, hot-dip galvanized	B	118,–	18,–	136,–
Drum Support FA 60-3, hot-dip galvanized	B	138,–	21,–	159,–
Can Shelf Type GR-A, galvanized	B	138,–	118,–	256,–
Can Shelf Type GR-B, galvanized	B	138,–	118,–	256,–
Can Shelf Type GR-C, galvanized	B	138,–	118,–	256,–

Hazardous Materials Depot Type GD-E/IBC	Category	Price	Freight charges	Price including freight charges
GD-E/IBC, galvanized	C	2367,–	on request	on request
GD-E/IBC-2, galvanized	C	3552,–	426,–	3978,–

Hazardous Materials Depot Type GD-N	Category	Price	Freight charges	Price including freight charges
GD-N 2, galvanized	C	1362,–	331,–	1693,–
Intermediate Storage Level, hot-dip galvanized	C	106,–	18,–	124,–
Drum Support FA 60-1, hot-dip galvanized	B	109,–	15,–	124,–
Can Shelf Type GR-A, galvanized	B	138,–	118,–	256,–
Can Shelf Type GR-B, galvanized	B	138,–	118,–	256,–
Can Shelf Type GR-C, galvanized	B	138,–	118,–	256,–
GD-N 4, galvanized	C	1697,–	331,–	2028,–
Intermediate Storage Level, hot-dip galvanized	C	106,–	18,–	124,–
Drum Support FA 60-1, hot-dip galvanized	B	109,–	15,–	124,–
Drum Support FA 60-2, hot-dip galvanized	B	118,–	18,–	136,–
Drum Support FA 200-1, hot-dip galvanized	B	118,–	15,–	133,–
Drum Support FA 200-2, hot-dip galvanized	B	138,–	22,–	160,–
Can Shelf Type GR-A, galvanized	B	138,–	118,–	256,–
Can Shelf Type GR-B, galvanized	B	138,–	118,–	256,–
Can Shelf Type GR-C, galvanized	B	138,–	118,–	256,–

Prices in EUR, valid EXW DE-46354 Südlohn, DE-38820 Halberstadt, unpacked
Freight charges valid CPT Bulgaria, islands and oversea territories excluded

BAUER GmbH
Eichendorffstr. 62
46354 Südlohn, Germany

Tel. +49 2862 70 90
info@bauer-suedlohn.com
www.bauer-suedlohn.com

Geschäftsführer
Patrick Bauer, Pascal Bauer
Amtsgericht Coesfeld HRB 5259

TÜVNORD
TÜV NORD CERT GmbH
DIN EN ISO 9001
tuev-nord.de

Price List 0726 en-BG
Environment / Storage

Hazardous Materials DepotType GD-N/R	Category	Price	Freight charges	Price including freight charges
GD-N/R 2, galvanized	C	1562,–	331,–	1893,–
Intermediate Storage Level, hot-dip galvanized	C	106,–	18,–	124,–
Drum Support FA 60-1, hot-dip galvanized	B	109,–	15,–	124,–
Can Shelf Type GR-A, galvanized	B	138,–	118,–	256,–
Can Shelf Type GR-B, galvanized	B	138,–	118,–	256,–
Can Shelf Type GR-C, galvanized	B	138,–	118,–	256,–
GD-N/R 4, galvanized	C	1901,–	331,–	2232,–
Intermediate Storage Level, hot-dip galvanized	C	106,–	18,–	124,–
Drum Support FA 60-1, hot-dip galvanized	B	109,–	15,–	124,–
Drum Support FA 60-2, hot-dip galvanized	B	118,–	18,–	136,–
Drum Support FA 200-1, hot-dip galvanized	B	118,–	15,–	133,–
Drum Support FA 200-2, hot-dip galvanized	B	138,–	22,–	160,–
Can Shelf Type GR-A, galvanized	B	138,–	118,–	256,–
Can Shelf Type GR-B, galvanized	B	138,–	118,–	256,–
Can Shelf Type GR-C, galvanized	B	138,–	118,–	256,–

Gas Cylinder Containers Type GFC-B	Category	Price	Freight charges	Price including freight charges
GFC-B M0, painted	B	3406,–	on request	on request
Fixture with Safety Chain to Secure Gas Cylinders, hot-dip galvanized	B	72,–	12,–	84,–
Rack for Gas Cylinders GFG-2, galvanized	B	204,–	138,–	342,–
GFC-B M1, painted	B	3949,–	on request	on request
Fixture with Safety Chain to Secure Gas Cylinders, hot-dip galvanized	B	72,–	12,–	84,–
Rack for Gas Cylinders GFG-2, galvanized	B	204,–	138,–	342,–
GFC-B M2, painted	B	4114,–	on request	on request
Fixture with Safety Chain to Secure Gas Cylinders, hot-dip galvanized	B	72,–	12,–	84,–
Rack for Gas Cylinders GFG-2, galvanized	B	204,–	138,–	342,–
GFC-B M3, painted	B	4761,–	on request	on request
Fixture with Safety Chain to Secure Gas Cylinders, hot-dip galvanized	B	72,–	12,–	84,–
Rack for Gas Cylinders GFG-2, galvanized	B	204,–	138,–	342,–
GFC-B M4, painted	B	5355,–	on request	on request
Fixture with Safety Chain to Secure Gas Cylinders, hot-dip galvanized	B	72,–	12,–	84,–
Rack for Gas Cylinders GFG-2, galvanized	B	204,–	138,–	342,–
GFC-B M5, painted	B	7439,–	on request	on request
Fixture with Safety Chain to Secure Gas Cylinders, hot-dip galvanized	B	72,–	12,–	84,–
Rack for Gas Cylinders GFG-2, galvanized	B	204,–	138,–	342,–

Gas Cylinder Containers Type GFC-B/W	Category	Price	Freight charges	Price including freight charges
GFC-B/W M1, painted	B	4216,–	on request	on request
Fixture with Safety Chain to Secure Gas Cylinders, hot-dip galvanized	B	72,–	12,–	84,–
GFC-B/W M2, painted	B	4421,–	on request	on request
Fixture with Safety Chain to Secure Gas Cylinders, hot-dip galvanized	B	72,–	12,–	84,–
GFC-B/W M3, painted	B	5076,–	on request	on request
Fixture with Safety Chain to Secure Gas Cylinders, hot-dip galvanized	B	72,–	12,–	84,–
Rack for Gas Cylinders GFG-2, galvanized	B	204,–	138,–	342,–
GFC-B/W M4, painted	B	5675,–	on request	on request

Prices in EUR, valid EXW DE-46354 Südlohn, DE-38820 Halberstadt, unpacked
Freight charges valid CPT Bulgaria, islands and oversea territories excluded

BAUER GmbH
Eichendorffstr. 62
46354 Südlohn, Germany

Tel. +49 2862 70 90
info@bauer-suedlohn.com
www.bauer-suedlohn.com

Geschäftsführer
Patrick Bauer, Pascal Bauer
Amtsgericht Coesfeld HRB 5259

TÜVNORD
TÜV NORD CERT GmbH
DIN EN ISO 9001
tuev-nord.de

Price List 0726 en-BG
Environment / Storage

Gas Cylinder Containers Type GFC-B/W	Category	Price	Freight charges	Price including freight charges
Fixture with Safety Chain to Secure Gas Cylinders, hot-dip galvanized	B	72,–	12,–	84,–
Rack for Gas Cylinders GFG-2, galvanized	B	204,–	138,–	342,–
GFC-B/W M5, painted	B	7844,–	on request	on request
Fixture with Safety Chain to Secure Gas Cylinders, hot-dip galvanized	B	72,–	12,–	84,–
Rack for Gas Cylinders GFG-2, galvanized	B	204,–	138,–	342,–

Gas Cylinder Containers Type GFC-E/G	Category	Price	Freight charges	Price including freight charges
GFC-E/G M0, hot-dip galvanized	B	1540,–	331,–	1871,–
Fixture with Safety Chain to Secure Gas Cylinders, hot-dip galvanized	B	40,–	12,–	52,–
Rack for Gas Cylinders GFG-2, galvanized	B	204,–	138,–	342,–
Access Ramp Type AR, galvanized	B	163,–	22,–	185,–
GFC-E/G M1, hot-dip galvanized	B	2191,–	on request	on request
Fixture with Safety Chain to Secure Gas Cylinders, hot-dip galvanized	B	40,–	12,–	52,–
Rack for Gas Cylinders GFG-2, galvanized	B	204,–	138,–	342,–
Access Ramp Type AR, galvanized	B	163,–	22,–	185,–
Central Dividing Wall, galvanized	B	87,–	22,–	109,–
GFC-E/G M2, hot-dip galvanized	B	2401,–	on request	on request
Fixture with Safety Chain to Secure Gas Cylinders, hot-dip galvanized	B	40,–	12,–	52,–
Rack for Gas Cylinders GFG-2, galvanized	B	204,–	138,–	342,–
Access Ramp Type AR, galvanized	B	163,–	22,–	185,–
Central Dividing Wall, galvanized	B	129,–	32,–	161,–
GFC-E/G M3, hot-dip galvanized	B	2671,–	on request	on request
Fixture with Safety Chain to Secure Gas Cylinders, hot-dip galvanized	B	40,–	12,–	52,–
Rack for Gas Cylinders GFG-2, galvanized	B	204,–	138,–	342,–
Access Ramp Type AR, galvanized	B	163,–	22,–	185,–
Central Dividing Wall, galvanized	B	129,–	32,–	161,–
GFC-E/G M4, hot-dip galvanized	B	2895,–	on request	on request
Fixture with Safety Chain to Secure Gas Cylinders, hot-dip galvanized	B	40,–	12,–	52,–
Rack for Gas Cylinders GFG-2, galvanized	B	204,–	138,–	342,–
Access Ramp Type AR, galvanized	B	163,–	22,–	185,–
Central Dividing Wall, galvanized	B	129,–	32,–	161,–
GFC-E/G M5, hot-dip galvanized	B	3587,–	on request	on request
Fixture with Safety Chain to Secure Gas Cylinders, hot-dip galvanized	B	40,–	12,–	52,–
Rack for Gas Cylinders GFG-2, galvanized	B	204,–	138,–	342,–
Access Ramp Type AR, galvanized	B	163,–	22,–	185,–
Central Dividing Wall, galvanized	B	191,–	40,–	231,–

Gas Cylinder Containers Type GFC-E/T	Category	Price	Freight charges	Price including freight charges
GFC-E/T M0, hot-dip galvanized	B	1560,–	331,–	1891,–
Fixture with Safety Chain to Secure Gas Cylinders, hot-dip galvanized	B	40,–	12,–	52,–
Rack for Gas Cylinders GFG-2, galvanized	B	204,–	138,–	342,–
Access Ramp Type AR, galvanized	B	163,–	22,–	185,–
GFC-E/T M1, hot-dip galvanized	B	2229,–	on request	on request
Fixture with Safety Chain to Secure Gas Cylinders, hot-dip galvanized	B	40,–	12,–	52,–
Rack for Gas Cylinders GFG-2, galvanized	B	204,–	138,–	342,–

Prices in EUR, valid EXW DE-46354 Südlohn, DE-38820 Halberstadt, unpacked
Freight charges valid CPT Bulgaria, islands and oversea territories excluded

BAUER GmbH
Eichendorffstr. 62
46354 Südlohn, Germany

Tel. +49 2862 70 90
info@bauer-suedlohn.com
www.bauer-suedlohn.com

Geschäftsführer
Patrick Bauer, Pascal Bauer
Amtsgericht Coesfeld HRB 5259

TÜVNORD
TÜV NORD CERT GmbH
DIN EN ISO 9001
tuev-nord.de

Price List 0726 en-BG
Environment / Storage

Gas Cylinder Containers Type GFC-E/T	Category	Price	Freight charges	Price including freight charges
Access Ramp Type AR, galvanized	B	163,–	22,–	185,–
Central Dividing Wall, galvanized	B	87,–	22,–	109,–
GFC-E/T M2, hot-dip galvanized	B	2448,–	on request	on request
Fixture with Safety Chain to Secure Gas Cylinders, hot-dip galvanized	B	40,–	12,–	52,–
Rack for Gas Cylinders GFG-2, galvanized	B	204,–	138,–	342,–
Access Ramp Type AR, galvanized	B	163,–	22,–	185,–
Central Dividing Wall, galvanized	B	129,–	32,–	161,–
GFC-E/T M3, hot-dip galvanized	B	2737,–	on request	on request
Fixture with Safety Chain to Secure Gas Cylinders, hot-dip galvanized	B	40,–	12,–	52,–
Rack for Gas Cylinders GFG-2, galvanized	B	204,–	138,–	342,–
Access Ramp Type AR, galvanized	B	163,–	22,–	185,–
Central Dividing Wall, galvanized	B	129,–	32,–	161,–
GFC-E/T M4, hot-dip galvanized	B	2960,–	on request	on request
Fixture with Safety Chain to Secure Gas Cylinders, hot-dip galvanized	B	40,–	12,–	52,–
Rack for Gas Cylinders GFG-2, galvanized	B	204,–	138,–	342,–
Access Ramp Type AR, galvanized	B	163,–	22,–	185,–
Central Dividing Wall, galvanized	B	129,–	32,–	161,–
GFC-E/T M5, hot-dip galvanized	B	3678,–	on request	on request
Fixture with Safety Chain to Secure Gas Cylinders, hot-dip galvanized	B	40,–	12,–	52,–
Rack for Gas Cylinders GFG-2, galvanized	B	204,–	138,–	342,–
Access Ramp Type AR, galvanized	B	163,–	22,–	185,–
Central Dividing Wall, galvanized	B	191,–	40,–	231,–

Gas Cylinder Containers Type GFC-M/D	Category	Price	Freight charges	Price including freight charges
GFC-M0/D, hot-dip galvanized	B	1028,–	226,–	1254,–
Grid Floor, hot-dip galvanized	B	152,–	72,–	224,–
Fixture with Safety Chain to Secure Gas Cylinders, hot-dip galvanized	B	40,–	12,–	52,–
Rack for Gas Cylinders GFG-2, galvanized	B	204,–	138,–	342,–
GFC-M1/D, hot-dip galvanized	B	1247,–	331,–	1578,–
Grid Floor, hot-dip galvanized	B	274,–	138,–	412,–
Fixture with Safety Chain to Secure Gas Cylinders, hot-dip galvanized	B	40,–	12,–	52,–
Rack for Gas Cylinders GFG-2, galvanized	B	204,–	138,–	342,–
GFC-M2/D, hot-dip galvanized	B	1327,–	331,–	1658,–
Grid Floor, hot-dip galvanized	B	375,–	138,–	513,–
Fixture with Safety Chain to Secure Gas Cylinders, hot-dip galvanized	B	40,–	12,–	52,–
Rack for Gas Cylinders GFG-2, galvanized	B	204,–	138,–	342,–
GFC-M3/D, hot-dip galvanized	B	1498,–	331,–	1829,–
Grid Floor, hot-dip galvanized	B	510,–	226,–	736,–
Fixture with Safety Chain to Secure Gas Cylinders, hot-dip galvanized	B	40,–	12,–	52,–
Rack for Gas Cylinders GFG-2, galvanized	B	204,–	138,–	342,–
GFC-M4/D, hot-dip galvanized	B	1601,–	331,–	1932,–
Grid Floor, hot-dip galvanized	B	627,–	226,–	853,–
Fixture with Safety Chain to Secure Gas Cylinders, hot-dip galvanized	B	40,–	12,–	52,–
Rack for Gas Cylinders GFG-2, galvanized	B	204,–	138,–	342,–
GFC-M5/D, hot-dip galvanized	B	1903,–	402,–	2305,–
Grid Floor, hot-dip galvanized	B	765,–	226,–	991,–

Prices in EUR, valid EXW DE-46354 Südlohn, DE-38820 Halberstadt, unpacked
Freight charges valid CPT Bulgaria, islands and oversea territories excluded

BAUER GmbH
Eichendorffstr. 62
46354 Südlohn, Germany

Tel. +49 2862 70 90
info@bauer-suedlohn.com
www.bauer-suedlohn.com

Geschäftsführer
Patrick Bauer, Pascal Bauer
Amtsgericht Coesfeld HRB 5259

TÜVNORD
TÜV NORD CERT GmbH
DIN EN ISO 9001
tuev-nord.de

Price List 0726 en-BG
Environment / Storage

Gas Cylinder Containers Type GFC-M/D	Category	Price	Freight charges	Price including freight charges
Fixture with Safety Chain to Secure Gas Cylinders, hot-dip galvanized	B	40,–	12,–	52,–
Rack for Gas Cylinders GFG-2, galvanized	B	204,–	138,–	342,–

Gas Cylinder Containers Type GFC-M	Category	Price	Freight charges	Price including freight charges
GFC-M1, hot-dip galvanized	B	1101,–	226,–	1327,–
Grid Floor, hot-dip galvanized	B	274,–	138,–	412,–
Fixture with Safety Chain to Secure Gas Cylinders, hot-dip galvanized	B	40,–	12,–	52,–
Rack for Gas Cylinders GFG-2, galvanized	B	204,–	138,–	342,–
GFC-M2, hot-dip galvanized	B	1169,–	331,–	1500,–
Grid Floor, hot-dip galvanized	B	375,–	138,–	513,–
Fixture with Safety Chain to Secure Gas Cylinders, hot-dip galvanized	B	40,–	12,–	52,–
Rack for Gas Cylinders GFG-2, galvanized	B	204,–	138,–	342,–
GFC-M3, hot-dip galvanized	B	1312,–	331,–	1643,–
Grid Floor, hot-dip galvanized	B	510,–	226,–	736,–
Fixture with Safety Chain to Secure Gas Cylinders, hot-dip galvanized	B	40,–	12,–	52,–
Rack for Gas Cylinders GFG-2, galvanized	B	204,–	138,–	342,–
GFC-M4, hot-dip galvanized	B	1380,–	331,–	1711,–
Grid Floor, hot-dip galvanized	B	627,–	226,–	853,–
Fixture with Safety Chain to Secure Gas Cylinders, hot-dip galvanized	B	40,–	12,–	52,–
Rack for Gas Cylinders GFG-2, galvanized	B	204,–	138,–	342,–
GFC-M5, hot-dip galvanized	B	1602,–	331,–	1933,–
Grid Floor, hot-dip galvanized	B	765,–	226,–	991,–
Fixture with Safety Chain to Secure Gas Cylinders, hot-dip galvanized	B	40,–	12,–	52,–
Rack for Gas Cylinders GFG-2, galvanized	B	204,–	138,–	342,–

Gas Cylinder Containers Type GFC-M/D-DF	Category	Price	Freight charges	Price including freight charges
GFC-M1/D-DF, hot-dip galvanized	B	1424,–	331,–	1755,–
Grid Floor, hot-dip galvanized	B	274,–	138,–	412,–
Fixture with Safety Chain to Secure Gas Cylinders, hot-dip galvanized	B	40,–	12,–	52,–
Rack for Gas Cylinders GFG-2, galvanized	B	204,–	138,–	342,–
GFC-M2/D-DF, hot-dip galvanized	B	1503,–	331,–	1834,–
Grid Floor, hot-dip galvanized	B	375,–	138,–	513,–
Fixture with Safety Chain to Secure Gas Cylinders, hot-dip galvanized	B	40,–	12,–	52,–
Rack for Gas Cylinders GFG-2, galvanized	B	204,–	138,–	342,–
GFC-M3/D-DF, hot-dip galvanized	B	1675,–	331,–	2006,–
Grid Floor, hot-dip galvanized	B	510,–	226,–	736,–
Fixture with Safety Chain to Secure Gas Cylinders, hot-dip galvanized	B	40,–	12,–	52,–
Rack for Gas Cylinders GFG-2, galvanized	B	204,–	138,–	342,–
GFC-M4/D-DF, hot-dip galvanized	B	1810,–	402,–	2212,–
Grid Floor, hot-dip galvanized	B	627,–	226,–	853,–
Fixture with Safety Chain to Secure Gas Cylinders, hot-dip galvanized	B	40,–	12,–	52,–
Rack for Gas Cylinders GFG-2, galvanized	B	204,–	138,–	342,–
GFC-M5/D-DF, hot-dip galvanized	B	2112,–	402,–	2514,–
Grid Floor, hot-dip galvanized	B	765,–	226,–	991,–
Fixture with Safety Chain to Secure Gas Cylinders, hot-dip galvanized	B	40,–	12,–	52,–

Prices in EUR, valid EXW DE-46354 Südlohn, DE-38820 Halberstadt, unpacked
Freight charges valid CPT Bulgaria, islands and oversea territories excluded

BAUER GmbH
Eichendorffstr. 62
46354 Südlohn, Germany

Tel. +49 2862 70 90
info@bauer-suedlohn.com
www.bauer-suedlohn.com

Geschäftsführer
Patrick Bauer, Pascal Bauer
Amtsgericht Coesfeld HRB 5259

TÜVNORD
TÜV NORD CERT GmbH
DIN EN ISO 9001
tuev-nord.de

Price List 0726 en-BG
Environment / Storage

Gas Cylinder Containers Type GFC-M/D-DF	Category	Price	Freight charges	Price including freight charges
Rack for Gas Cylinders GFG-2, galvanized	B	204,–	138,–	342,–
GFC-M6/D-DF, hot-dip galvanized	B	2775,–	582,–	3357,–
Fixture with Safety Chain to Secure Gas Cylinders, hot-dip galvanized	B	40,–	12,–	52,–
Rack for Gas Cylinders GFG-2, galvanized	B	204,–	138,–	342,–

Gas Cylinder Containers Type GFC-M-DF	Category	Price	Freight charges	Price including freight charges
GFC-M1-DF, hot-dip galvanized	B	1276,–	226,–	1502,–
Grid Floor, hot-dip galvanized	B	274,–	138,–	412,–
Fixture with Safety Chain to Secure Gas Cylinders, hot-dip galvanized	B	40,–	12,–	52,–
Rack for Gas Cylinders GFG-2, galvanized	B	204,–	138,–	342,–
GFC-M2-DF, hot-dip galvanized	B	1346,–	331,–	1677,–
Grid Floor, hot-dip galvanized	B	375,–	138,–	513,–
Fixture with Safety Chain to Secure Gas Cylinders, hot-dip galvanized	B	40,–	12,–	52,–
Rack for Gas Cylinders GFG-2, galvanized	B	204,–	138,–	342,–
GFC-M3-DF, hot-dip galvanized	B	1490,–	331,–	1821,–
Grid Floor, hot-dip galvanized	B	510,–	226,–	736,–
Fixture with Safety Chain to Secure Gas Cylinders, hot-dip galvanized	B	40,–	12,–	52,–
Rack for Gas Cylinders GFG-2, galvanized	B	204,–	138,–	342,–
GFC-M4-DF, hot-dip galvanized	B	1591,–	331,–	1922,–
Grid Floor, hot-dip galvanized	B	627,–	226,–	853,–
Fixture with Safety Chain to Secure Gas Cylinders, hot-dip galvanized	B	40,–	12,–	52,–
Rack for Gas Cylinders GFG-2, galvanized	B	204,–	138,–	342,–
GFC-M5-DF, hot-dip galvanized	B	1812,–	402,–	2214,–
Grid Floor, hot-dip galvanized	B	765,–	226,–	991,–
Fixture with Safety Chain to Secure Gas Cylinders, hot-dip galvanized	B	40,–	12,–	52,–
Rack for Gas Cylinders GFG-2, galvanized	B	204,–	138,–	342,–

Gas Cylinder Depot Type GFD-G	Category	Price	Freight charges	Price including freight charges
GFD-G 1, galvanized	B	429,–	226,–	655,–
GFD-G 2, galvanized	B	790,–	226,–	1016,–

Gas Cylinder Depot Type GFD-L	Category	Price	Freight charges	Price including freight charges
GFD-L 1, galvanized	B	462,–	138,–	600,–
GFD-L 2, galvanized	B	880,–	226,–	1106,–

Gas Cylinder Depot Type GFD-R	Category	Price	Freight charges	Price including freight charges
GFD-R 2, painted	B	774,–	138,–	912,–
GFD-R 2, hot-dip galvanized	B	798,–	138,–	936,–
GFD-R 4, painted	B	879,–	138,–	1017,–
GFD-R 4, hot-dip galvanized	B	909,–	138,–	1047,–

Hazardous Materials Cabinet Type GS	Category	Price	Freight charges	Price including freight charges
GS-1, painted	B	789,–	226,–	1015,–
Intermediate Storage Level, galvanized	B	90,–	14,–	104,–
GS-1, hot-dip galvanized	B	849,–	226,–	1075,–

Prices in EUR, valid EXW DE-46354 Südlohn, DE-38820 Halberstadt, unpacked
Freight charges valid CPT Bulgaria, islands and oversea territories excluded

BAUER GmbH
Eichendorffstr. 62
46354 Südlohn, Germany

Tel. +49 2862 70 90
info@bauer-suedlohn.com
www.bauer-suedlohn.com

Geschäftsführer
Patrick Bauer, Pascal Bauer
Amtsgericht Coesfeld HRB 5259

TÜVNORD
TÜV NORD CERT GmbH
DIN EN ISO 9001
tuev-nord.de

Price List 0726 en-BG
Environment / Storage

Hazardous Materials Cabinet Type GS	Category	Price	Freight charges	Price including freight charges
Intermediate Storage Level, galvanized	B	90,–	14,–	104,–
GS-2, painted	B	1049,–	331,–	1380,–
Intermediate Storage Level, galvanized	B	90,–	14,–	104,–
GS-2, hot-dip galvanized	B	1139,–	331,–	1470,–
Intermediate Storage Level, galvanized	B	90,–	14,–	104,–
GS-3, painted	B	2143,–	402,–	2545,–
GS-3, hot-dip galvanized	B	2295,–	402,–	2697,–
GS-4, painted	B	2154,–	on request	on request
GS-4, hot-dip galvanized	B	2340,–	on request	on request

Gas Cylinder Wall Bracket Type GWH	Category	Price	Freight charges	Price including freight charges
GWH 140-I, hot-dip galvanized	F	26,–	118,–	144,–
GWH 140-II, hot-dip galvanized	F	40,–	118,–	158,–
GWH 140-III, hot-dip galvanized	F	59,–	118,–	177,–
GWH 230-I, hot-dip galvanized	F	28,–	118,–	146,–
GWH 230-II, hot-dip galvanized	F	43,–	118,–	161,–
GWH 230-III, hot-dip galvanized	F	65,–	118,–	183,–
GWH 320-I, hot-dip galvanized	F	29,–	118,–	147,–
GWH 320-II, hot-dip galvanized	F	48,–	118,–	166,–
GWH 320-III, hot-dip galvanized	F	72,–	118,–	190,–

Tilting Canister Stand Type KAH	Category	Price	Freight charges	Price including freight charges
KAH-5, galvanized	A	96,–	118,–	214,–
KAH-25, galvanized	A	109,–	118,–	227,–
KAH-60, galvanized	A	140,–	118,–	258,–

Spill Tray for Canisters/Small Cans Type KGW	Category	Price	Freight charges	Price including freight charges
KGW 1, galvanized	B	92,–	118,–	210,–
KGW 1 V4A, stainless steel 1.4571	B	280,–	118,–	398,–
KGW 2, galvanized	B	96,–	118,–	214,–
KGW 2 V4A, stainless steel 1.4571	B	322,–	118,–	440,–
KGW 3, galvanized	B	100,–	118,–	218,–
KGW 3 V4A, stainless steel 1.4571	B	400,–	118,–	518,–
KGW 4, galvanized	B	117,–	138,–	255,–
KGW 4 V4A, stainless steel 1.4571	B	472,–	138,–	610,–
KGW 5, galvanized	B	161,–	138,–	299,–
KGW 5 V4A, stainless steel 1.4571	B	614,–	138,–	752,–

Spill Tray for Canisters/Small Cans Type KGW/M	Category	Price	Freight charges	Price including freight charges
KGW 1/M, galvanized	B	129,–	118,–	247,–
KGW 1/M V4A, stainless steel 1.4571	B	421,–	118,–	539,–
KGW 2/M, galvanized	B	137,–	118,–	255,–
KGW 2/M V4A, stainless steel 1.4571	B	485,–	118,–	603,–
KGW 3/M, galvanized	B	157,–	118,–	275,–
KGW 3/M V4A, stainless steel 1.4571	B	610,–	118,–	728,–

Prices in EUR, valid EXW DE-46354 Südlohn, DE-38820 Halberstadt, unpacked
Freight charges valid CPT Bulgaria, islands and oversea territories excluded

BAUER GmbH
Eichendorffstr. 62
46354 Südlohn, Germany

Tel. +49 2862 70 90
info@bauer-suedlohn.com
www.bauer-suedlohn.com

Geschäftsführer
Patrick Bauer, Pascal Bauer
Amtsgericht Coesfeld HRB 5259

TÜVNORD
TÜV NORD CERT GmbH
DIN EN ISO 9001
tuev-nord.de

Price List 0726 en-BG
Environment / Storage

Spill Tray for Canisters/Small Cans Type KGW/M	Category	Price	Freight charges	Price including freight charges
KGW 4/M, galvanized	B	182,–	138,–	320,–
KGW 4/M V4A, stainless steel 1.4571	B	730,–	138,–	868,–
KGW 5/M, galvanized	B	235,–	138,–	373,–
KGW 5/M V4A, stainless steel 1.4571	B	962,–	138,–	1100,–

Spill Tray for Canisters/Small Cans on Pallets Type KGW-P	Category	Price	Freight charges	Price including freight charges
KGW-P 1, galvanized	B	98,–	118,–	216,–
KGW-P 1 V4A, stainless steel 1.4571	B	276,–	118,–	394,–
KGW-P 2, galvanized	B	147,–	118,–	265,–
KGW-P 2 V4A, stainless steel 1.4571	B	396,–	118,–	514,–
KGW-P 3, galvanized	B	185,–	138,–	323,–
KGW-P 3 V4A, stainless steel 1.4571	B	607,–	118,–	725,–
KGW-P 4, galvanized	B	175,–	118,–	293,–
KGW-P 4 V4A, stainless steel 1.4571	B	466,–	118,–	584,–

Spill Tray for Canisters/Small Cans on Pallets Type KGW-P/M	Category	Price	Freight charges	Price including freight charges
KGW-P 1/M, galvanized	B	142,–	118,–	260,–
KGW-P 1/M V4A, stainless steel 1.4571	B	399,–	118,–	517,–
KGW-P 2/M, galvanized	B	218,–	118,–	336,–
KGW-P 2/M V4A, stainless steel 1.4571	B	579,–	118,–	697,–
KGW-P 3/M, galvanized	B	265,–	138,–	403,–
KGW-P 3/M V4A, stainless steel 1.4571	B	895,–	138,–	1033,–
KGW-P 4/M, galvanized	B	250,–	138,–	388,–
KGW-P 4/M V4A, stainless steel 1.4571	B	719,–	118,–	837,–

Diesel Filling Point Type KPS	Category	Price	Freight charges	Price including freight charges
KPS 1, painted	B	2966,–	on request	on request
KPS 2, painted	B	3854,–	on request	on request
KPS 3, painted	B	5432,–	on request	on request

Polyethylene Sump Tray for Pallets Type KWP-P	Category	Price	Freight charges	Price including freight charges
KWP-P 20, made of robust polyethylene	B	48,–	118,–	166,–
Deck with Punched Holes LR-PE 20, robust polyethylene, black	B	64,–	14,–	78,–
KWP-P 30, made of robust polyethylene	B	58,–	118,–	176,–
Deck with Punched Holes LR-PE 30, robust polyethylene, black	B	66,–	14,–	80,–
KWP-P 40, made of robust polyethylene	B	65,–	118,–	183,–
Deck with Punched Holes LR-PE 40, robust polyethylene, black	B	70,–	14,–	84,–
KWP-P 60, made of robust polyethylene	B	103,–	118,–	221,–
Deck with punched holes LR-PE 60, robust polyethylene, black	B	73,–	14,–	87,–
KWP-P 100, made of robust polyethylene	B	117,–	138,–	255,–
Deck with punched holes LR-PE 100, robust polyethylene, black	B	90,–	16,–	106,–

Mobile Sump Tray with Perforated Panel Type LPW	Category	Price	Freight charges	Price including freight charges
LPW 60-1, painted	B	627,–	138,–	765,–
Tool Deposit	B	32,–	16,–	48,–

Prices in EUR, valid EXW DE-46354 Südlohn, DE-38820 Halberstadt, unpacked
Freight charges valid CPT Bulgaria, islands and oversea territories excluded

BAUER GmbH
Eichendorffstr. 62
46354 Südlohn, Germany

Tel. +49 2862 70 90
info@bauer-suedlohn.com
www.bauer-suedlohn.com

Geschäftsführer
Patrick Bauer, Pascal Bauer
Amtsgericht Coesfeld HRB 5259

TÜVNORD
TÜV NORD CERT GmbH
DIN EN ISO 9001
tuev-nord.de

Price List 0726 en-BG
Environment / Storage

Mobile Sump Tray with Perforated Panel Type LPW	Category	Price	Freight charges	Price including freight charges
Drip Tray	B	50,–	16,–	66,–
LPW 60-1, hot-dip galvanized	B	645,–	138,–	783,–
Tool Deposit	B	32,–	16,–	48,–
Drip Tray	B	50,–	16,–	66,–
LPW 60-2, painted	B	640,–	138,–	778,–
Tool Deposit	B	32,–	16,–	48,–
Drip Tray	B	50,–	16,–	66,–
LPW 60-2, hot-dip galvanized	B	661,–	138,–	799,–
Tool Deposit	B	32,–	16,–	48,–
Drip Tray	B	50,–	16,–	66,–
LPW 60-3, painted	B	646,–	138,–	784,–
Tool Deposit	B	32,–	16,–	48,–
Drip Tray	B	50,–	16,–	66,–
LPW 60-3, hot-dip galvanized	B	667,–	138,–	805,–
Tool Deposit	B	32,–	16,–	48,–
Drip Tray	B	50,–	16,–	66,–
LPW 200-1, painted	B	822,–	226,–	1048,–
Tool Deposit	B	32,–	16,–	48,–
Drip Tray	B	50,–	16,–	66,–
LPW 200-1, hot-dip galvanized	B	856,–	226,–	1082,–
Tool Deposit	B	32,–	16,–	48,–
Drip Tray	B	50,–	16,–	66,–
LPW 200-2, painted	B	863,–	226,–	1089,–
Tool Deposit	B	32,–	16,–	48,–
Drip Tray	B	50,–	16,–	66,–
LPW 200-2, hot-dip galvanized	B	899,–	226,–	1125,–
Tool Deposit	B	32,–	16,–	48,–
Drip Tray	B	50,–	16,–	66,–
LPW 200-3, painted	B	878,–	226,–	1104,–
Tool Deposit	B	32,–	16,–	48,–
Drip Tray	B	50,–	16,–	66,–
LPW 200-3, hot-dip galvanized	B	914,–	226,–	1140,–
Tool Deposit	B	32,–	16,–	48,–
Drip Tray	B	50,–	16,–	66,–
LPW 200-4, painted	B	1055,–	226,–	1281,–
LPW 200-4, hot-dip galvanized	B	1086,–	226,–	1312,–

Modular Sump Tray Type MAW	Category	Price	Freight charges	Price including freight charges
MAW, painted	B	336,–	138,–	474,–
MAW, hot-dip galvanized	B	366,–	138,–	504,–
Element No. 1: grid grate incl. supporTS, painted	B	78,–	18,–	96,–
Element No. 2: galvanized handle + castors	B	138,–	19,–	157,–
Element No. 3: runners, painted	B	103,–	15,–	118,–
Element No. 3: runners, hot-dip galvanized	B	66,–	15,–	81,–
Element No. 6: surround, galvanized	B	601,–	138,–	739,–

Prices in EUR, valid EXW DE-46354 Südlohn, DE-38820 Halberstadt, unpacked
Freight charges valid CPT Bulgaria, islands and oversea territories excluded

BAUER GmbH
Eichendorffstr. 62
46354 Südlohn, Germany

Tel. +49 2862 70 90
info@bauer-suedlohn.com
www.bauer-suedlohn.com

Geschäftsführer
Patrick Bauer, Pascal Bauer
Amtsgericht Coesfeld HRB 5259

TÜVNORD
TÜV NORD CERT GmbH
DIN EN ISO 9001
tuev-nord.de

Price List 0726 en-BG
Environment / Storage

Spline Sump Type PW	Category	Price	Freight charges	Price including freight charges
PW 200-2, painted	B	245,–	138,–	383,–
PW 200-2, hot-dip galvanized	B	235,–	138,–	373,–
PW 200-4, painted	B	271,–	138,–	409,–
PW 200-4, hot-dip galvanized	B	261,–	138,–	399,–
PW 400-4, painted	B	349,–	138,–	487,–
PW 400-4, hot-dip galvanized	B	332,–	138,–	470,–

Spline Sump Type PWE	Category	Price	Freight charges	Price including freight charges
PWE 200-2, painted	B	217,–	138,–	355,–
PWE 200-2, hot-dip galvanized	B	207,–	138,–	345,–
PWE 200-4, painted	B	236,–	138,–	374,–
PWE 200-4, hot-dip galvanized	B	228,–	138,–	366,–
PWE 400-4, painted	B	288,–	138,–	426,–
PWE 400-4, hot-dip galvanized	B	278,–	138,–	416,–

Hazardous Materials Cabinet with Roller Shutter Door Type RSG	Category	Price	Freight charges	Price including freight charges
RSG-1, painted	B	1906,–	226,–	2132,–
Set of 4 Feet, height adjustable	B	80,–	9,–	89,–
RSG-2, painted	B	1920,–	226,–	2146,–
Set of 4 Feet, height adjustable	B	80,–	9,–	89,–
RSG-3, painted	B	1971,–	226,–	2197,–
Set of 4 Feet, height adjustable	B	80,–	9,–	89,–
RSG-4, painted	B	2109,–	331,–	2440,–
Set of 4 Feet, height adjustable	B	80,–	9,–	89,–

Shelf Sump with Polyethylene Inlay Type RW PE	Category	Price	Freight charges	Price including freight charges
RW 1800 PE, painted	B	1044,–	226,–	1270,–
RW 1800 PE, hot-dip galvanized	B	1100,–	226,–	1326,–
RW 2200-1 PE, painted	B	1089,–	226,–	1315,–
RW 2200-1 PE, hot-dip galvanized	B	1147,–	226,–	1373,–
RW 2200-2 PE, painted	B	1276,–	226,–	1502,–
RW 2200-2 PE, hot-dip galvanized	B	1341,–	226,–	1567,–
RW 2700-1 PE, painted	B	1108,–	280,–	1388,–
RW 2700-1 PE, hot-dip galvanized	B	1192,–	280,–	1472,–
RW 2700-2 PE, painted	B	1266,–	280,–	1546,–
RW 2700-2 PE, hot-dip galvanized	B	1365,–	280,–	1645,–
RW 2700-3 PE, painted	B	1466,–	280,–	1746,–
RW 2700-3 PE, hot-dip galvanized	B	1592,–	280,–	1872,–
RW 3300-1 PE, painted	B	1417,–	280,–	1697,–
RW 3300-1 PE, hot-dip galvanized	B	1510,–	280,–	1790,–
RW 3300-2 PE, painted	B	1535,–	280,–	1815,–
RW 3300-2 PE, hot-dip galvanized	B	1637,–	280,–	1917,–
RW 3300-3 PE, painted	B	1738,–	384,–	2122,–
RW 3300-3 PE, hot-dip galvanized	B	1850,–	384,–	2234,–

Prices in EUR, valid EXW DE-46354 Südlohn, DE-38820 Halberstadt, unpacked
Freight charges valid CPT Bulgaria, islands and oversea territories excluded

BAUER GmbH
Eichendorffstr. 62
46354 Südlohn, Germany

Tel. +49 2862 70 90
info@bauer-suedlohn.com
www.bauer-suedlohn.com

Geschäftsführer
Patrick Bauer, Pascal Bauer
Amtsgericht Coesfeld HRB 5259

TÜVNORD
TÜV NORD CERT GmbH
DIN EN ISO 9001
tuev-nord.de

Price List 0726 en-BG
Environment / Storage

Shelf Sump Type RW	Category	Price	Freight charges	Price including freight charges
RW 1800, painted	B	507,–	138,–	645,–
RW 1800, hot-dip galvanized	B	561,–	138,–	699,–
RW 2200-1, painted	B	519,–	138,–	657,–
RW 2200-1, hot-dip galvanized	B	577,–	138,–	715,–
RW 2200-2, painted	B	532,–	226,–	758,–
RW 2200-2, hot-dip galvanized	B	597,–	226,–	823,–
RW 2700-1, painted	B	528,–	280,–	808,–
RW 2700-1, hot-dip galvanized	B	611,–	280,–	891,–
RW 2700-2, painted	B	607,–	280,–	887,–
RW 2700-2, hot-dip galvanized	B	706,–	280,–	986,–
RW 2700-3, painted	B	657,–	280,–	937,–
RW 2700-3, hot-dip galvanized	B	781,–	280,–	1061,–
RW 3300-1, painted	B	680,–	280,–	960,–
RW 3300-1, hot-dip galvanized	B	774,–	280,–	1054,–
RW 3300-2, painted	B	748,–	280,–	1028,–
RW 3300-2, hot-dip galvanized	B	850,–	280,–	1130,–
RW 3300-3, painted	B	834,–	280,–	1114,–
RW 3300-3, hot-dip galvanized	B	945,–	280,–	1225,–

Shelf Sump with Polyethylene Inlay Type RW-GR PE	Category	Price	Freight charges	Price including freight charges
RW-GR 1800 PE, painted	B	1178,–	226,–	1404,–
RW-GR 1800 PE, hot-dip galvanized	B	1231,–	226,–	1457,–
RW-GR 2200-1 PE, painted	B	1255,–	226,–	1481,–
RW-GR 2200-1 PE, hot-dip galvanized	B	1313,–	226,–	1539,–
RW-GR 2200-2 PE, painted	B	1443,–	331,–	1774,–
RW-GR 2200-2 PE, hot-dip galvanized	B	1505,–	331,–	1836,–
RW-GR 2700-1 PE, painted	B	1313,–	384,–	1697,–
RW-GR 2700-1 PE, hot-dip galvanized	B	1395,–	384,–	1779,–
RW-GR 2700-2 PE, painted	B	1469,–	384,–	1853,–
RW-GR 2700-2 PE, hot-dip galvanized	B	1570,–	384,–	1954,–
RW-GR 2700-3 PE, painted	B	1671,–	384,–	2055,–
RW-GR 2700-3 PE, hot-dip galvanized	B	1776,–	384,–	2160,–
RW-GR 3300-1 PE, painted	B	1790,–	384,–	2174,–
RW-GR 3300-1 PE, hot-dip galvanized	B	1882,–	384,–	2266,–
RW-GR 3300-2 PE, painted	B	1906,–	384,–	2290,–
RW-GR 3300-2 PE, hot-dip galvanized	B	2018,–	384,–	2402,–
RW-GR 3300-3 PE, painted	B	2110,–	455,–	2565,–
RW-GR 3300-3 PE, hot-dip galvanized	B	2222,–	455,–	2677,–
RW-GR 3600-3 PE, painted	B	2428,–	468,–	2896,–
RW-GR 3600-3 PE, hot-dip galvanized	B	2580,–	468,–	3048,–

Shelf Sump Type RW-GR	Category	Price	Freight charges	Price including freight charges
RW-GR 1800, painted	B	641,–	226,–	867,–
RW-GR 1800, hot-dip galvanized	B	696,–	226,–	922,–
RW-GR 2200-1, painted	B	686,–	226,–	912,–

Prices in EUR, valid EXW DE-46354 Südlohn, DE-38820 Halberstadt, unpacked
Freight charges valid CPT Bulgaria, islands and oversea territories excluded

BAUER GmbH
Eichendorffstr. 62
46354 Südlohn, Germany

Tel. +49 2862 70 90
info@bauer-suedlohn.com
www.bauer-suedlohn.com

Geschäftsführer
Patrick Bauer, Pascal Bauer
Amtsgericht Coesfeld HRB 5259

TÜVNORD
TÜV NORD CERT GmbH
DIN EN ISO 9001
tuev-nord.de

Price List 0726 en-BG
Environment / Storage

Shelf Sump Type RW-GR	Category	Price	Freight charges	Price including freight charges
RW-GR 2200-1, hot-dip galvanized	B	745,–	226,–	971,–
RW-GR 2200-2, painted	B	700,–	331,–	1031,–
RW-GR 2200-2, hot-dip galvanized	B	761,–	331,–	1092,–
RW-GR 2700-1, painted	B	732,–	280,–	1012,–
RW-GR 2700-1, hot-dip galvanized	B	815,–	384,–	1199,–
RW-GR 2700-2, painted	B	811,–	384,–	1195,–
RW-GR 2700-2, hot-dip galvanized	B	911,–	384,–	1295,–
RW-GR 2700-3, painted	B	861,–	384,–	1245,–
RW-GR 2700-3, hot-dip galvanized	B	966,–	384,–	1350,–
RW-GR 3300-1, painted	B	1052,–	384,–	1436,–
RW-GR 3300-1, hot-dip galvanized	B	1146,–	384,–	1530,–
RW-GR 3300-2, painted	B	1119,–	384,–	1503,–
RW-GR 3300-2, hot-dip galvanized	B	1230,–	384,–	1614,–
RW-GR 3300-3, painted	B	1206,–	384,–	1590,–
RW-GR 3300-3, hot-dip galvanized	B	1317,–	384,–	1701,–
RW-GR 3600-3, painted	B	1330,–	384,–	1714,–
RW-GR 3600-3, hot-dip galvanized	B	1483,–	384,–	1867,–

Safety Cabinet Type SIW	Category	Price	Freight charges	Price including freight charges
SIW 1005	B	596,–	138,–	734,–
SIW 2005	B	751,–	226,–	977,–

Diesel Filling Point Type TAW	Category	Price	Freight charges	Price including freight charges
TAW 1, painted	B	2448,–	on request	on request
TAW 2, painted	B	3195,–	on request	on request
TAW 3, painted	B	4603,–	on request	on request

Environmental Shelve Type UR	Category	Price	Freight charges	Price including freight charges
UR-G 2200, painted	B	1827,–	390,–	2217,–
Grid Set, hot-dip galvanized	B	198,–	138,–	336,–
Crash Guard	B	75,–	9,–	84,–
UR-G 2700, painted	B	1968,–	390,–	2358,–
Grid Set, hot-dip galvanized	B	245,–	138,–	383,–
Crash Guard	B	75,–	9,–	84,–
UR-G 3300, painted	B	2749,–	455,–	3204,–
Grid Set, hot-dip galvanized	B	297,–	138,–	435,–
Crash Guard	B	75,–	9,–	84,–
UR-A 2200, painted	B	1395,–	390,–	1785,–
Grid Set, hot-dip galvanized	B	198,–	138,–	336,–
Crash Guard	B	75,–	9,–	84,–
UR-A 2700, painted	B	1535,–	390,–	1925,–
Grid Set, hot-dip galvanized	B	245,–	138,–	383,–
Crash Guard	B	75,–	9,–	84,–
UR-A 3300, painted	B	2317,–	455,–	2772,–
Grid Set, hot-dip galvanized	B	297,–	138,–	435,–

Prices in EUR, valid EXW DE-46354 Südlohn, DE-38820 Halberstadt, unpacked
Freight charges valid CPT Bulgaria, islands and oversea territories excluded

BAUER GmbH
Eichendorffstr. 62
46354 Südlohn, Germany

Tel. +49 2862 70 90
info@bauer-suedlohn.com
www.bauer-suedlohn.com

Geschäftsführer
Patrick Bauer, Pascal Bauer
Amtsgericht Coesfeld HRB 5259

TÜVNORD
TÜV NORD CERT GmbH
DIN EN ISO 9001
tuev-nord.de

Price List 0726 en-BG
Environment / Storage

Environmental Shelve Type UR	Category	Price	Freight charges	Price including freight charges
Crash Guard	B	75,–	9,–	84,–

Stainless Steel Sump Tray Type VAW	Category	Price	Freight charges	Price including freight charges
VAW-1, stainless steel 1.4571	B	990,–	138,–	1128,–
Grid, stainless steel 1.4571	B	494,–	14,–	508,–
Grid, hot-dip galvanized	B	71,–	14,–	85,–
VAW-2, stainless steel 1.4571	B	1079,–	138,–	1217,–
Grid, stainless steel 1.4571	B	731,–	16,–	747,–
Grid, hot-dip galvanized	B	95,–	38,–	133,–
VAW-4/A, stainless steel 1.4571	B	1236,–	138,–	1374,–
Grid, stainless steel 1.4571	B	1061,–	22,–	1083,–
Grid, hot-dip galvanized	B	124,–	22,–	146,–
VAW-4/B, stainless steel 1.4571	B	1511,–	138,–	1649,–
Grid, stainless steel 1.4571	B	1461,–	27,–	1488,–
Grid, hot-dip galvanized	B	169,–	27,–	196,–
VAW 1000 (Stainless Steel Grid), stainless steel 1.4571	B	3909,–	254,–	4163,–
VAW 1000 (Hot-dip Galvanized Grid), stainless steel 1.4571	B	2868,–	254,–	3122,–
VAW 1000-2 (Stainless Steel Grid), stainless steel 1.4571	B	5472,–	418,–	5890,–
VAW 1000-2 (Hot-dip Galvanized Grid), stainless steel 1.4571	B	3561,–	418,–	3979,–

Heating Chamber Type WK	Category	Price	Freight charges	Price including freight charges
WK 29-2 E65, painted	C	30688,–	on request	on request
WK 29-2 E85, painted	C	30859,–	on request	on request
WK 57-2 E65, painted	C	43080,–	on request	on request
WK 57-2 E85, painted	C	45540,–	on request	on request

Sump Tray Type WM	Category	Price	Freight charges	Price including freight charges
WM-2/200, hot-dip galvanized	B	290,–	138,–	428,–
Drum Support FA 60-1, hot-dip galvanized	B	109,–	15,–	124,–
Drum Support FA 60-2, hot-dip galvanized	B	118,–	18,–	136,–
Drum Support FA 60-3, hot-dip galvanized	B	138,–	21,–	159,–
Drum Support FA 200-1, hot-dip galvanized	B	118,–	15,–	133,–
Can Shelf Type GR-A, galvanized	B	138,–	118,–	256,–
Can Shelf Type GR-B, galvanized	B	138,–	118,–	256,–
Can Shelf Type GR-C, galvanized	B	138,–	118,–	256,–
WM-4/200, hot-dip galvanized	B	330,–	138,–	468,–
Drum Support FA 60-1, hot-dip galvanized	B	109,–	15,–	124,–
Drum Support FA 60-2, hot-dip galvanized	B	118,–	18,–	136,–
Drum Support FA 60-3, hot-dip galvanized	B	138,–	21,–	159,–
Drum Support FA 200-1, hot-dip galvanized	B	118,–	15,–	133,–
Drum Support FA 200-2, hot-dip galvanized	B	138,–	22,–	160,–
Can Shelf Type GR-A, galvanized	B	138,–	118,–	256,–
Can Shelf Type GR-B, galvanized	B	138,–	118,–	256,–
Can Shelf Type GR-C, galvanized	B	138,–	118,–	256,–
WM-4/400, hot-dip galvanized	B	396,–	226,–	622,–

Prices in EUR, valid EXW DE-46354 Südlohn, DE-38820 Halberstadt, unpacked
Freight charges valid CPT Bulgaria, islands and oversea territories excluded

BAUER GmbH
Eichendorffstr. 62
46354 Südlohn, Germany

Tel. +49 2862 70 90
info@bauer-suedlohn.com
www.bauer-suedlohn.com

Geschäftsführer
Patrick Bauer, Pascal Bauer
Amtsgericht Coesfeld HRB 5259

TÜVNORD
TÜV NORD CERT GmbH
DIN EN ISO 9001
tuev-nord.de

Price List 0726 en-BG
Environment / Storage

Sump Tray Type WO	Category	Price	Freight charges	Price including freight charges
WO-2/200, hot-dip galvanized	B	221,–	138,–	359,–
WO-4/200, hot-dip galvanized	B	240,–	138,–	378,–
WO-4/400, hot-dip galvanized	B	309,–	138,–	447,–

Polyethylene Sump Pallet Type WP	Category	Price	Freight charges	Price including freight charges
WP 1/11, made of robust polyethylene	B	1089,–	138,–	1227,–
WP 2/11, made of robust polyethylene	B	1377,–	138,–	1515,–
Dispensing Tray VB 2, robust polyethylene, blue	B	158,–	118,–	276,–

Polyethylene Sump Pallet Type WPA-PE	Category	Price	Freight charges	Price including freight charges
WPA-PE 2/2, made of robust polyethylene	B	324,–	138,–	462,–
WPA-PE 4/2, made of robust polyethylene	B	512,–	138,–	650,–

Polyethylene Sump Pallet Type WP-PE	Category	Price	Freight charges	Price including freight charges
WP-PE 1/11, made of robust polyethylene	B	1179,–	138,–	1317,–
Dispensing Tray VB 1, robust polyethylene, blue	B	169,–	118,–	287,–
WP-PE 2/11, made of robust polyethylene	B	1560,–	280,–	1840,–
Dispensing Tray VB 2, robust polyethylene, blue	B	158,–	118,–	276,–
WP-PE 2/2, made of robust polyethylene	B	301,–	138,–	439,–
WP-PE 4/2, made of robust polyethylene	B	469,–	138,–	607,–
WP-PE 4/4, made of robust polyethylene	B	487,–	138,–	625,–
WP-PE 8/11, made of robust polyethylene	B	1560,–	280,–	1840,–

Mobile Polyethylene Sump Tray Type WPT	Category	Price	Freight charges	Price including freight charges
WPT 230, made of robust polyethylene	B	538,–	138,–	676,–

Prices in EUR, valid EXW DE-46354 Südlohn, DE-38820 Halberstadt, unpacked
Freight charges valid CPT Bulgaria, islands and oversea territories excluded

BAUER GmbH
Eichendorffstr. 62
46354 Südlohn, Germany

Tel. +49 2862 70 90
info@bauer-suedlohn.com
www.bauer-suedlohn.com

Geschäftsführer
Patrick Bauer, Pascal Bauer
Amtsgericht Coesfeld HRB 5259

TÜVNORD
TÜV NORD CERT GmbH
DIN EN ISO 9001
tuev-nord.de

Price List 0726 en-BG
Hazardous Materials Containers

Fluorescent Tube Box Type AL-D	Category	Price	Freight charges	Price including freight charges
AL-D 150, aluminium	C	518,–	138,–	656,–
AL-D 200, aluminium	C	571,–	138,–	709,–

Collecting Container Type ASB	Category	Price	Freight charges	Price including freight charges
ASB 250, hot-dip galvanized	C	2038,–	331,–	2369,–
ASB 450-I, hot-dip galvanized	C	2155,–	331,–	2486,–

Special Waste Container Type ASK	Category	Price	Freight charges	Price including freight charges
ASK 540-4, hot-dip galvanized	C	on request	on request	on request

Duo-Container Type DC	Category	Price	Freight charges	Price including freight charges
DC 450, hot-dip galvanized	C	2347,–	on request	on request
Stainless steel strainer	D	118,–	9,–	127,–
Wing nut spanner for M12, hot-dip galvanized	F	35,–	15,–	50,–
DC 1000, hot-dip galvanized	C	2493,–	on request	on request
Stainless steel strainer	D	118,–	9,–	127,–
Wing nut spanner for M12, hot-dip galvanized	F	35,–	15,–	50,–

Lithium-Ion Storage Container Type LIL	Category	Price	Freight charges	Price including freight charges
LIL 30, hot-dip galvanized	B	1937,–	138,–	2075,–
LIL 90, hot-dip galvanized	B	2816,–	226,–	3042,–
Castor Set, polyamide, Load capacity 1050 kg / castor set	A	156,–	15,–	171,–
LIL 220, hot-dip galvanized	B	4864,–	331,–	5195,–
Castor Set, polyamide, Load capacity 1050 kg / castor set	A	156,–	15,–	171,–
LIL 280, hot-dip galvanized	B	5884,–	331,–	6215,–
Castor Set, polyamide, Load capacity 1050 kg / castor set	A	156,–	15,–	171,–
LIL 340, hot-dip galvanized	B	6792,–	331,–	7123,–
Castor Set, polyamide, Load capacity 1050 kg / castor set	A	156,–	15,–	171,–

MobiCont Type M 800	Category	Price	Freight charges	Price including freight charges
M 800, painted	C	1389,–	331,–	1720,–
Level Indicator	C	220,–	9,–	229,–
Funnel for filling, PP	D	68,–	9,–	77,–
Filling/Extraction lid	C	68,–	9,–	77,–
Lid, galvanized, without a lock	C	195,–	15,–	210,–
Lid, galvanized, with square lock	C	242,–	18,–	260,–
Lid, galvanized, with cylinder lock	C	242,–	18,–	260,–
Castor Set, polyamide, Load capacity 1350 kg / castor set	A	192,–	15,–	207,–
Hand Pump K 10 C, connects to drum thread, suitable for fuels and heating fuel	C	95,–	14,–	109,–
Hose Kit (1.5 m) for Hand Pump Type K 10 C, suitable for diesel and fuel	C	68,–	14,–	82,–
Hose Kit (3 m) for Hand Pump Type K 10 C, suitable for diesel and fuel	C	96,–	15,–	111,–

Prices in EUR, valid EXW DE-46354 Südlohn, DE-38820 Halberstadt, unpacked
Freight charges valid CPT Bulgaria, islands and oversea territories excluded

BAUER GmbH
Eichendorffstr. 62
46354 Südlohn, Germany

Tel. +49 2862 70 90
info@bauer-suedlohn.com
www.bauer-suedlohn.com

Geschäftsführer
Patrick Bauer, Pascal Bauer
Amtsgericht Coesfeld HRB 5259

TÜVNORD
TÜV NORD CERT GmbH
DIN EN ISO 9001
tuev-nord.de

Price List 0726 en-BG
Hazardous Materials Containers

MobiCont Type M 800	Category	Price	Freight charges	Price including freight charges
Hose Kit (4 m) for Hand Pump Type K 10 C, suitable for diesel and fuel	C	109,–	15,–	124,–
Electric Pump TecPump 400 DC 12V	C	510,–	15,–	525,–
Electric Pump TecPump 400 DC 24V	C	510,–	15,–	525,–
Electric Pump TecPump 600 AC 230V	C	510,–	15,–	525,–
M 800, hot-dip galvanized	C	1483,–	331,–	1814,–
Level Indicator	C	220,–	9,–	229,–
Funnel for filling, PP	D	68,–	9,–	77,–
Filling/Extraction lid	C	68,–	9,–	77,–
Lid, galvanized, without a lock	C	195,–	15,–	210,–
Lid, galvanized, with square lock	C	242,–	18,–	260,–
Lid, galvanized, with cylinder lock	C	242,–	18,–	260,–
Castor Set, polyamide, Load capacity 1350 kg / castor set	A	192,–	15,–	207,–
Hand Pump K 10 C, connects to drum thread, suitable for fuels and heating fuel	C	95,–	14,–	109,–
Hose Kit (1.5 m) for Hand Pump Type K 10 C, suitable for diesel and fuel	C	68,–	14,–	82,–
Hose Kit (3 m) for Hand Pump Type K 10 C, suitable for diesel and fuel	C	96,–	15,–	111,–
Hose Kit (4 m) for Hand Pump Type K 10 C, suitable for diesel and fuel	C	109,–	15,–	124,–
Electric Pump TecPump 400 DC 12V	C	510,–	15,–	525,–
Electric Pump TecPump 400 DC 24V	C	510,–	15,–	525,–
Electric Pump TecPump 600 AC 230V	C	510,–	15,–	525,–

MobiCont Type MD	Category	Price	Freight charges	Price including freight charges
MD 800, painted	C	1934,–	331,–	2265,–
Level Indicator	C	220,–	9,–	229,–
Hand Pump K 10 C, connects to drum thread, suitable for fuels and heating fuel	C	95,–	14,–	109,–
Hose Kit (1.5 m) for Hand Pump Type K 10 C, suitable for diesel and fuel	C	68,–	14,–	82,–
Hose Kit (3 m) for Hand Pump Type K 10 C, suitable for diesel and fuel	C	96,–	15,–	111,–
Hose Kit (4 m) for Hand Pump Type K 10 C, suitable for diesel and fuel	C	109,–	15,–	124,–
Electric Pump TecPump 400 DC 12V	C	510,–	15,–	525,–
Electric Pump TecPump 400 DC 24V	C	510,–	15,–	525,–
Electric Pump TecPump 600 AC 230V	C	510,–	15,–	525,–
MD 800, hot-dip galvanized	C	2025,–	331,–	2356,–
Level Indicator	C	220,–	9,–	229,–
Hand Pump K 10 C, connects to drum thread, suitable for fuels and heating fuel	C	95,–	14,–	109,–
Hose Kit (1.5 m) for Hand Pump Type K 10 C, suitable for diesel and fuel	C	68,–	14,–	82,–
Hose Kit (3 m) for Hand Pump Type K 10 C, suitable for diesel and fuel	C	96,–	15,–	111,–
Hose Kit (4 m) for Hand Pump Type K 10 C, suitable for diesel and fuel	C	109,–	15,–	124,–
Electric Pump TecPump 400 DC 12V	C	510,–	15,–	525,–
Electric Pump TecPump 400 DC 24V	C	510,–	15,–	525,–
Electric Pump TecPump 600 AC 230V	C	510,–	15,–	525,–

MobiCont Type MO	Category	Price	Freight charges	Price including freight charges
MO 800, painted	C	on request	on request	on request
Level Indicator	C	220,–	9,–	229,–
MO 800, hot-dip galvanized	C	on request	on request	on request
Level Indicator	C	220,–	9,–	229,–

Prices in EUR, valid EXW DE-46354 Südlohn, DE-38820 Halberstadt, unpacked
Freight charges valid CPT Bulgaria, islands and oversea territories excluded

BAUER GmbH
Eichendorffstr. 62
46354 Südlohn, Germany

Tel. +49 2862 70 90
info@bauer-suedlohn.com
www.bauer-suedlohn.com

Geschäftsführer
Patrick Bauer, Pascal Bauer
Amtsgericht Coesfeld HRB 5259

TÜVNORD
TÜV NORD CERT GmbH
DIN EN ISO 9001
tuev-nord.de

Price List 0726 en-BG
Hazardous Materials Containers

Fuel Container Type MT	Category	Price	Freight charges	Price including freight charges
MT 450, hot-dip galvanized	C	2223,–	331,–	2554,–
Level Indicator	C	220,–	9,–	229,–
Hand Pump K 10 C, connects to drum thread, suitable for fuels and heating fuel	C	95,–	14,–	109,–
Digital Flow Counter FMT 3 with screwed joints	C	320,–	9,–	329,–
Electric Pump TecPump 400 DC 12V	C	510,–	12,–	522,–
Electric Pump TecPump 400 DC 24V	C	510,–	12,–	522,–
Electric Pump TecPump 600 AC 230V	C	510,–	12,–	522,–
Counter Z 400, Retrofit Kit for Electric Pumps TecPump 400 DC 12V, 400 DC 24V and 600 AC 230V	C	159,–	9,–	168,–
MT 600, hot-dip galvanized	C	2644,–	331,–	2975,–
Level Indicator	C	220,–	9,–	229,–
Hand Pump K 10 C, connects to drum thread, suitable for fuels and heating fuel	C	95,–	14,–	109,–
Digital Flow Counter FMT 3 with screwed joints	C	320,–	9,–	329,–
Electric Pump TecPump 400 DC 12V	C	510,–	12,–	522,–
Electric Pump TecPump 400 DC 24V	C	510,–	12,–	522,–
Electric Pump TecPump 600 AC 230V	C	510,–	12,–	522,–
Counter Z 400, Retrofit Kit for Electric Pumps TecPump 400 DC 12V, 400 DC 24V and 600 AC 230V	C	159,–	9,–	168,–
MT 1000, hot-dip galvanized	C	2858,–	402,–	3260,–
Level Indicator	C	220,–	9,–	229,–
Hand Pump K 10 C, connects to drum thread, suitable for fuels and heating fuel	C	95,–	14,–	109,–
Digital Flow Counter FMT 3 with screwed joints	C	320,–	9,–	329,–
Electric Pump TecPump 400 DC 12V	C	510,–	12,–	522,–
Electric Pump TecPump 400 DC 24V	C	510,–	12,–	522,–
Electric Pump TecPump 600 AC 230V	C	510,–	12,–	522,–
Counter Z 400, Retrofit Kit for Electric Pumps TecPump 400 DC 12V, 400 DC 24V and 600 AC 230V	C	159,–	9,–	168,–

MobiCont Type MW	Category	Price	Freight charges	Price including freight charges
MW 800, painted	C	1783,–	331,–	2114,–
Level Indicator	C	220,–	9,–	229,–
Filling coupling	C	53,–	8,–	61,–
Tank heating, 220 W	C	384,–	12,–	396,–
Tank fitting	B	67,–	9,–	76,–
Anti-siphon valve	D	71,–	8,–	79,–
Aeration/Vent valve	C	27,–	8,–	35,–
MW 800, hot-dip galvanized	C	1877,–	331,–	2208,–
Level Indicator	C	220,–	9,–	229,–
Filling coupling	C	53,–	8,–	61,–
Tank heating, 220 W	C	384,–	12,–	396,–
Tank fitting	B	67,–	9,–	76,–
Anti-siphon valve	D	71,–	8,–	79,–
Aeration/Vent valve	C	27,–	8,–	35,–

Special Waste Container Type SAF	Category	Price	Freight charges	Price including freight charges
SAF 450, hot-dip galvanized	C	1136,–	on request	on request
SAF 600, hot-dip galvanized	C	1136,–	on request	on request
SAF 1000, hot-dip galvanized	C	1136,–	on request	on request

Prices in EUR, valid EXW DE-46354 Südlohn, DE-38820 Halberstadt, unpacked
Freight charges valid CPT Bulgaria, islands and oversea territories excluded

BAUER GmbH
Eichendorffstr. 62
46354 Südlohn, Germany

Tel. +49 2862 70 90
info@bauer-suedlohn.com
www.bauer-suedlohn.com

Geschäftsführer
Patrick Bauer, Pascal Bauer
Amtsgericht Coesfeld HRB 5259

TÜVNORD
TÜV NORD CERT GmbH
DIN EN ISO 9001
tuev-nord.de

Price List 0726 en-BG
Hazardous Materials Containers

Large Salvage Packaging Type SAG	Category	Price	Freight charges	Price including freight charges
SAG 800, hot-dip galvanized	C	1141,–	331,–	1472,–
SAG 1500, hot-dip galvanized	C	2151,–	on request	on request
Polyethylene sacks, 25 pieces on roll	C	187,–	41,–	228,–
SAG 2100, hot-dip galvanized	C	2257,–	on request	on request
Polyethylene sacks, 25 pieces on roll	C	187,–	41,–	228,–
SAG 2700, hot-dip galvanized	C	2331,–	on request	on request
Polyethylene sacks, 25 pieces on roll	C	187,–	41,–	228,–

Special Waste Container Type SAP	Category	Price	Freight charges	Price including freight charges
SAP 450, hot-dip galvanized	C	953,–	on request	on request
Polyethylene sacks, 50 pieces on roll - 0,085 mm	C	139,–	62,–	201,–
Polyethylene sacks, 50 pieces on roll - 0,16 mm	C	246,–	138,–	384,–
SAP 600, hot-dip galvanized	C	953,–	on request	on request
Polyethylene sacks, 50 pieces on roll - 0,085 mm	C	139,–	62,–	201,–
Polyethylene sacks, 50 pieces on roll - 0,16 mm	C	246,–	138,–	384,–
SAP 800, hot-dip galvanized	C	953,–	on request	on request
Polyethylene sacks, 50 pieces on roll - 0,085 mm	C	139,–	62,–	201,–
Polyethylene sacks, 50 pieces on roll - 0,16 mm	C	246,–	138,–	384,–

Special Waste Container Type SAP-1	Category	Price	Freight charges	Price including freight charges
SAP 450-1, hot-dip galvanized	C	891,–	on request	on request
Polyethylene sacks, 50 pieces on roll - 0,085 mm	C	139,–	62,–	201,–
Polyethylene sacks, 50 pieces on roll - 0,16 mm	C	246,–	138,–	384,–
SAP 600-1, hot-dip galvanized	C	891,–	on request	on request
Polyethylene sacks, 50 pieces on roll - 0,085 mm	C	139,–	62,–	201,–
Polyethylene sacks, 50 pieces on roll - 0,16 mm	C	246,–	138,–	384,–
SAP 800-1, hot-dip galvanized	C	891,–	on request	on request
Polyethylene sacks, 50 pieces on roll - 0,085 mm	C	139,–	62,–	201,–
Polyethylene sacks, 50 pieces on roll - 0,16 mm	C	246,–	138,–	384,–
SAP 800-3, hot-dip galvanized	C	874,–	on request	on request
Polyethylene sacks, 50 pieces on roll - 0,085 mm	C	139,–	62,–	201,–
Polyethylene sacks, 50 pieces on roll - 0,16 mm	C	246,–	138,–	384,–

Used Battery Container Type SAP 600 K	Category	Price	Freight charges	Price including freight charges
SAP 600 K, hot-dip galvanized	C	1286,–	on request	on request

Used Battery Container Type SAP 601 K	Category	Price	Freight charges	Price including freight charges
SAP 601 K, hot-dip galvanized	C	1141,–	on request	on request

Special Waste Container Type SAS	Category	Price	Freight charges	Price including freight charges
SAS 800, hot-dip galvanized	C	963,–	on request	on request

Hazardous Materials Container Type SF	Category	Price	Freight charges	Price including freight charges
SF 240, hot-dip galvanized	C	on request	on request	on request

Prices in EUR, valid EXW DE-46354 Südlohn, DE-38820 Halberstadt, unpacked
Freight charges valid CPT Bulgaria, islands and oversea territories excluded

BAUER GmbH
Eichendorffstr. 62
46354 Südlohn, Germany

Tel. +49 2862 70 90
info@bauer-suedlohn.com
www.bauer-suedlohn.com

Geschäftsführer
Patrick Bauer, Pascal Bauer
Amtsgericht Coesfeld HRB 5259

TÜVNORD
TÜV NORD CERT GmbH
DIN EN ISO 9001
tuev-nord.de

Price List 0726 en-BG
Hazardous Materials Containers

Fluorescent Tube Box Type SL	Category	Price	Freight charges	Price including freight charges
SL 150, painted	C	688,–	226,–	914,–
SL 150, hot-dip galvanized	C	822,–	226,–	1048,–
SL 200, painted	C	766,–	226,–	992,–
SL 200, hot-dip galvanized	C	902,–	331,–	1233,–

Fluorescent Tube Box Type SL-D	Category	Price	Freight charges	Price including freight charges
SL-D 150, painted	C	757,–	226,–	983,–
Removable Tray, galvanized	C	87,–	10,–	97,–
SL-D 150, hot-dip galvanized	C	880,–	226,–	1106,–
Removable Tray, galvanized	C	87,–	10,–	97,–
SL-D 200, painted	C	837,–	226,–	1063,–
Removable Tray, galvanized	C	87,–	10,–	97,–
SL-D 200, hot-dip galvanized	C	973,–	226,–	1199,–
Removable Tray, galvanized	C	87,–	10,–	97,–

Fluorescent Tube Box Type SL-N	Category	Price	Freight charges	Price including freight charges
SL-N 220, painted	C	861,–	226,–	1087,–
SL-N 220, hot-dip galvanized	C	1003,–	226,–	1229,–

Special Waste Container Type SP	Category	Price	Freight charges	Price including freight charges
SP 100, hot-dip galvanized	C	on request	on request	on request
SP 240, hot-dip galvanized	C	on request	on request	on request

Transport Box for Aerosol Cans Type STB	Category	Price	Freight charges	Price including freight charges
STB 1000, hot-dip galvanized	C	1158,–	on request	on request
Polyethylene sacks, 50 pieces on roll	C	192,–	62,–	254,–
Absorbent felt, 100 pieces	C	366,–	118,–	484,–

Prices in EUR, valid EXW DE-46354 Südlohn, DE-38820 Halberstadt, unpacked
Freight charges valid CPT Bulgaria, islands and oversea territories excluded

BAUER GmbH
Eichendorffstr. 62
46354 Südlohn, Germany

Tel. +49 2862 70 90
info@bauer-suedlohn.com
www.bauer-suedlohn.com

Geschäftsführer
Patrick Bauer, Pascal Bauer
Amtsgericht Coesfeld HRB 5259

TÜVNORD
TÜV NORD CERT GmbH
DIN EN ISO 9001
tuev-nord.de