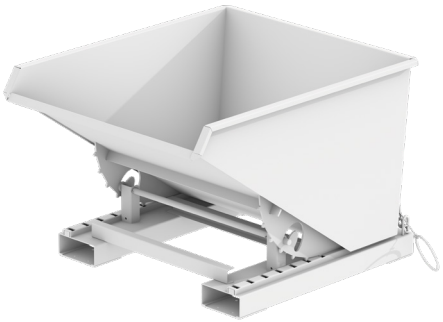

# PRICE LIST 0726 EN-DK

## FORKLIFT TRUCK ATTACHMENTS

## WORKSPACE MATERIAL HANDLING

## ENVIRONMENT / STORAGE

## HAZARDOUS MATERIALS CONTAINERS

INNOVATION – CONSTRUCTION – PRODUCTION

*. . . since 1966*

# Price List 0726 en-DK
# Forklift Truck Attachments

| Drum Gripper Type 3P | Category | Price | Freight charges | Price including freight charges |
|---|---|---|---|---|
| **3P, painted** | B | 942,– | 106,– | 1048,– |
| **3P, hot-dip galvanized** | B | 990,– | 106,– | 1096,– |

| Tilting Container Type 3S | Category | Price | Freight charges | Price including freight charges |
|---|---|---|---|---|
| **3S 300, painted** | A | 1244,– | 143,– | 1387,– |
| Lid, galvanized | A | 174,– | 18,– | 192,– |
| Castor Set, polyamide, Load capacity 1050 kg / castor set | A | 136,– | 15,– | 151,– |
| **3S 300, hot-dip galvanized** | A | 1342,– | 201,– | 1543,– |
| Lid, galvanized | A | 174,– | 18,– | 192,– |
| Castor Set, polyamide, Load capacity 1050 kg / castor set | A | 136,– | 15,– | 151,– |
| **3S 600, painted** | A | 1300,– | 201,– | 1501,– |
| Lid, galvanized | A | 196,– | 22,– | 218,– |
| Castor Set, polyamide, Load capacity 1050 kg / castor set | A | 136,– | 15,– | 151,– |
| **3S 600, hot-dip galvanized** | A | 1402,– | 201,– | 1603,– |
| Lid, galvanized | A | 196,– | 22,– | 218,– |
| Castor Set, polyamide, Load capacity 1050 kg / castor set | A | 136,– | 15,– | 151,– |

| Automatic Tilting Container Type 4A | Category | Price | Freight charges | Price including freight charges |
|---|---|---|---|---|
| **4A 600, painted** | A | 1103,– | 143,– | 1246,– |
| Lid, galvanized | A | 196,– | 22,– | 218,– |
| Skip Body Welded Oil and Watertight | A | 78,– | 0,– | 78,– |
| **4A 600, hot-dip galvanized** | A | 1250,– | 143,– | 1393,– |
| Lid, galvanized | A | 196,– | 22,– | 218,– |
| Skip Body Welded Oil and Watertight | A | 78,– | 0,– | 78,– |
| **4A 900, painted** | A | 1239,– | 201,– | 1440,– |
| Lid, galvanized | A | 223,– | 27,– | 250,– |
| Skip Body Welded Oil and Watertight | A | 78,– | 0,– | 78,– |
| **4A 900, hot-dip galvanized** | A | 1424,– | 201,– | 1625,– |
| Lid, galvanized | A | 223,– | 27,– | 250,– |
| Skip Body Welded Oil and Watertight | A | 78,– | 0,– | 78,– |
| **4A 1200, painted** | A | 1327,– | 201,– | 1528,– |
| Lid, galvanized | A | 223,– | 26,– | 249,– |
| Skip Body Welded Oil and Watertight | A | 121,– | 0,– | 121,– |
| **4A 1200, hot-dip galvanized** | A | 1558,– | 201,– | 1759,– |
| Lid, galvanized | A | 223,– | 26,– | 249,– |
| Skip Body Welded Oil and Watertight | A | 121,– | 0,– | 121,– |

| Drum Gripper Type 4P | Category | Price | Freight charges | Price including freight charges |
|---|---|---|---|---|
| **4P, painted** | B | 578,– | 32,– | 610,– |
| **4P, hot-dip galvanized** | B | 551,– | 32,– | 583,– |

Prices in EUR, valid EXW DE-46354 Südlohn, DE-38820 Halberstadt, unpacked
Freight charges valid CPT Denmark, islands and oversea territories excluded



BAUER GmbH
Eichendorffstr. 62
46354 Südlohn, Germany

Tel. +49 2862 70 90
info@bauer-suedlohn.com
www.bauer-suedlohn.com

Geschäftsführer
Patrick Bauer, Pascal Bauer
Amtsgericht Coesfeld HRB 5259

TÜVNORD
TÜV NORD CERT GmbH
DIN EN ISO 9001
tuev-nord.de

# Price List 0726 en-DK
# Forklift Truck Attachments

| Drum Gripper Type 4P-D | Category | Price | Freight charges | Price including freight charges |
|---|---|---|---|---|
| **4P-D120, painted** | B | 578,– | 32,– | 610,– |
| **4P-D120, hot-dip galvanized** | B | 551,– | 32,– | 583,– |
| **4P-D220, painted** | B | 578,– | 32,– | 610,– |
| **4P-D220, hot-dip galvanized** | B | 551,– | 32,– | 583,– |

| Tilting Container Type AK | Category | Price | Freight charges | Price including freight charges |
|---|---|---|---|---|
| **AK 50, painted** | A | 802,– | 143,– | 945,– |
| Lid, galvanized | A | 140,– | 16,– | 156,– |
| Castor Set, polyamide, Load capacity 1050 kg / castor set | A | 136,– | 15,– | 151,– |
| Skip Body Welded Oil and Watertight | A | 78,– | 0,– | 78,– |
| **AK 50, hot-dip galvanized** | A | 956,– | 143,– | 1099,– |
| Lid, galvanized | A | 140,– | 16,– | 156,– |
| Castor Set, polyamide, Load capacity 1050 kg / castor set | A | 136,– | 15,– | 151,– |
| Skip Body Welded Oil and Watertight | A | 78,– | 0,– | 78,– |
| **AK 75, painted** | A | 897,– | 143,– | 1040,– |
| Lid, galvanized | A | 192,– | 21,– | 213,– |
| Castor Set, polyamide, Load capacity 1050 kg / castor set | A | 136,– | 15,– | 151,– |
| Skip Body Welded Oil and Watertight | A | 78,– | 0,– | 78,– |
| **AK 75, hot-dip galvanized** | A | 1048,– | 201,– | 1249,– |
| Lid, galvanized | A | 192,– | 21,– | 213,– |
| Castor Set, polyamide, Load capacity 1050 kg / castor set | A | 136,– | 15,– | 151,– |
| Skip Body Welded Oil and Watertight | A | 78,– | 0,– | 78,– |
| **AK 100, painted** | A | 970,– | 201,– | 1171,– |
| Lid, galvanized | A | 218,– | 26,– | 244,– |
| Castor Set, polyamide, Load capacity 1050 kg / castor set | A | 136,– | 15,– | 151,– |
| Skip Body Welded Oil and Watertight | A | 121,– | 0,– | 121,– |
| **AK 100, hot-dip galvanized** | A | 1133,– | 201,– | 1334,– |
| Lid, galvanized | A | 218,– | 26,– | 244,– |
| Castor Set, polyamide, Load capacity 1050 kg / castor set | A | 136,– | 15,– | 151,– |
| Skip Body Welded Oil and Watertight | A | 121,– | 0,– | 121,– |
| **AK 150, painted** | A | 1238,– | 201,– | 1439,– |
| Lid, galvanized | A | 305,– | 28,– | 333,– |
| Castor Set, polyamide, Load capacity 1050 kg / castor set | A | 136,– | 15,– | 151,– |
| Skip Body Welded Oil and Watertight | A | 121,– | 0,– | 121,– |
| **AK 150, hot-dip galvanized** | A | 1448,– | 201,– | 1649,– |
| Lid, galvanized | A | 305,– | 28,– | 333,– |
| Castor Set, polyamide, Load capacity 1050 kg / castor set | A | 136,– | 15,– | 151,– |
| Skip Body Welded Oil and Watertight | A | 121,– | 0,– | 121,– |

| Container for Building Materials Type BBG | Category | Price | Freight charges | Price including freight charges |
|---|---|---|---|---|
| **BBG 100, painted** | A | 405,– | 143,– | 548,– |
| Lid, galvanized | A | 189,– | 106,– | 295,– |
| **BBG 100, hot-dip galvanized** | A | 496,– | 143,– | 639,– |
| Lid, galvanized | A | 189,– | 106,– | 295,– |

Prices in EUR, valid EXW DE-46354 Südlohn, DE-38820 Halberstadt, unpacked
Freight charges valid CPT Denmark, islands and oversea territories excluded



BAUER GmbH
Eichendorffstr. 62
46354 Südlohn, Germany

Tel. +49 2862 70 90
info@bauer-suedlohn.com
www.bauer-suedlohn.com

Geschäftsführer
Patrick Bauer, Pascal Bauer
Amtsgericht Coesfeld HRB 5259

TÜVNORD
TÜV NORD CERT GmbH
DIN EN ISO 9001
tuev-nord.de

# Price List 0726 en-DK
# Forklift Truck Attachments

| Container for Building Materials Type BBK | Category | Price | Freight charges | Price including freight charges |
|---|---|---|---|---|
| **BBK 100, painted** | A | 496,– | 143,– | 639,– |
| Lid, galvanized | A | 189,– | 106,– | 295,– |
| **BBK 100, hot-dip galvanized** | A | 571,– | 143,– | 714,– |
| Lid, galvanized | A | 189,– | 106,– | 295,– |

| Material Container Type BBM | Category | Price | Freight charges | Price including freight charges |
|---|---|---|---|---|
| **BBM 500, painted** | A | 325,– | 106,– | 431,– |
| **BBM 500, hot-dip galvanized** | A | 359,– | 106,– | 465,– |

| Container for Building Materials Type BBP | Category | Price | Freight charges | Price including freight charges |
|---|---|---|---|---|
| **BBP 100, painted** | A | 433,– | 106,– | 539,– |
| Lid, galvanized | A | 189,– | 106,– | 295,– |
| Pick-up cones (pins) and angle iron traverse lock | A | 51,– | 10,– | 61,– |
| **BBP 100, hot-dip galvanized** | A | 511,– | 106,– | 617,– |
| Lid, galvanized | A | 189,– | 106,– | 295,– |
| Pick-up cones (pins) and angle iron traverse lock | A | 51,– | 10,– | 61,– |

| Tilting Traverse for Containers for Building Material Containers Type BBT | Category | Price | Freight charges | Price including freight charges |
|---|---|---|---|---|
| **BBT, painted** | A | 571,– | 143,– | 714,– |
| **BBT, hot-dip galvanized** | A | 649,– | 143,– | 792,– |

| Building Materials Container Type BC | Category | Price | Freight charges | Price including freight charges |
|---|---|---|---|---|
| **BC 500, painted** | B | 957,– | 143,– | 1100,– |
| Lid, galvanized | B | 143,– | 16,– | 159,– |
| Castor Set, polyamide, Load capacity 1350 kg / castor set | A | 192,– | 15,– | 207,– |
| **BC 500, hot-dip galvanized** | B | 1179,– | 201,– | 1380,– |
| Lid, galvanized | B | 143,– | 16,– | 159,– |
| Castor Set, polyamide, Load capacity 1350 kg / castor set | A | 192,– | 15,– | 207,– |
| **BC 500 (brick clamp operated), painted** | B | 1026,– | 143,– | 1169,– |
| Lid, galvanized | B | 143,– | 16,– | 159,– |
| Castor Set, polyamide, Load capacity 1350 kg / castor set | A | 192,– | 15,– | 207,– |
| **BC 500 (brick clamp operated), hot-dip galvanized** | B | 1250,– | 201,– | 1451,– |
| Lid, galvanized | B | 143,– | 16,– | 159,– |
| Castor Set, polyamide, Load capacity 1350 kg / castor set | A | 192,– | 15,– | 207,– |
| **BC 1000, painted** | B | 1043,– | 201,– | 1244,– |
| Lid, galvanized | B | 143,– | 16,– | 159,– |
| Castor Set, polyamide, Load capacity 1350 kg / castor set | A | 192,– | 15,– | 207,– |
| **BC 1000, hot-dip galvanized** | B | 1316,– | 201,– | 1517,– |
| Lid, galvanized | B | 143,– | 16,– | 159,– |
| Castor Set, polyamide, Load capacity 1350 kg / castor set | A | 192,– | 15,– | 207,– |
| **BC 1000 (brick clamp operated), painted** | B | 1111,– | 201,– | 1312,– |
| Lid, galvanized | B | 143,– | 16,– | 159,– |
| Castor Set, polyamide, Load capacity 1350 kg / castor set | A | 192,– | 15,– | 207,– |
| **BC 1000 (brick clamp operated), hot-dip galvanized** | B | 1386,– | 201,– | 1587,– |
| Lid, galvanized | B | 143,– | 16,– | 159,– |

Prices in EUR, valid EXW DE-46354 Südlohn, DE-38820 Halberstadt, unpacked
Freight charges valid CPT Denmark, islands and oversea territories excluded



BAUER GmbH
Eichendorffstr. 62
46354 Südlohn, Germany

Tel. +49 2862 70 90
info@bauer-suedlohn.com
www.bauer-suedlohn.com

Geschäftsführer
Patrick Bauer, Pascal Bauer
Amtsgericht Coesfeld HRB 5259

TÜVNORD
TÜV NORD CERT GmbH
DIN EN ISO 9001
tuev-nord.de

# Price List 0726 en-DK
# Forklift Truck Attachments

| Building Materials Container Type BC | Category | Price | Freight charges | Price including freight charges |
|---|---|---|---|---|
| Castor Set, polyamide, Load capacity 1350 kg / castor set | A | 192,– | 15,– | 207,– |

| Tilting Container Type BK | Category | Price | Freight charges | Price including freight charges |
|---|---|---|---|---|
| **BK 30, painted** | A | 700,– | 143,– | 843,– |
| Lid, galvanized | A | 98,– | 18,– | 116,– |
| Castor Set, polyamide, Load capacity 1350 kg / castor set | A | 192,– | 15,– | 207,– |
| Heavy-duty Castor Set, polyamide, Load capacity 2550 kg / castor set | A | 379,– | 15,– | 394,– |
| Skip Body Welded Oil and Watertight | A | 78,– | 0,– | 78,– |
| **BK 30, hot-dip galvanized** | A | 984,– | 143,– | 1127,– |
| Lid, galvanized | A | 98,– | 18,– | 116,– |
| Castor Set, polyamide, Load capacity 1350 kg / castor set | A | 192,– | 15,– | 207,– |
| Heavy-duty Castor Set, polyamide, Load capacity 2550 kg / castor set | A | 379,– | 15,– | 394,– |
| Skip Body Welded Oil and Watertight | A | 78,– | 0,– | 78,– |
| **BK 50, painted** | A | 984,– | 143,– | 1127,– |
| Lid, galvanized | A | 98,– | 20,– | 118,– |
| Castor Set, polyamide, Load capacity 1350 kg / castor set | A | 192,– | 15,– | 207,– |
| Heavy-duty Castor Set, polyamide, Load capacity 2550 kg / castor set | A | 379,– | 15,– | 394,– |
| Skip Body Welded Oil and Watertight | A | 78,– | 0,– | 78,– |
| **BK 50, hot-dip galvanized** | A | 1327,– | 201,– | 1528,– |
| Lid, galvanized | A | 98,– | 20,– | 118,– |
| Castor Set, polyamide, Load capacity 1350 kg / castor set | A | 192,– | 15,– | 207,– |
| Heavy-duty Castor Set, polyamide, Load capacity 2550 kg / castor set | A | 379,– | 15,– | 394,– |
| Skip Body Welded Oil and Watertight | A | 78,– | 0,– | 78,– |
| **BK 80, painted** | A | 1297,– | 201,– | 1498,– |
| Lid, galvanized | A | 144,– | 22,– | 166,– |
| Castor Set, polyamide, Load capacity 1350 kg / castor set | A | 192,– | 15,– | 207,– |
| Heavy-duty Castor Set, polyamide, Load capacity 2550 kg / castor set | A | 379,– | 15,– | 394,– |
| Skip Body Welded Oil and Watertight | A | 78,– | 0,– | 78,– |
| **BK 80, hot-dip galvanized** | A | 1814,– | 201,– | 2015,– |
| Lid, galvanized | A | 144,– | 22,– | 166,– |
| Castor Set, polyamide, Load capacity 1350 kg / castor set | A | 192,– | 15,– | 207,– |
| Heavy-duty Castor Set, polyamide, Load capacity 2550 kg / castor set | A | 379,– | 15,– | 394,– |
| Skip Body Welded Oil and Watertight | A | 78,– | 0,– | 78,– |
| **BK 100, painted** | A | 1508,– | 201,– | 1709,– |
| Lid, galvanized | A | 173,– | 27,– | 200,– |
| Castor Set, polyamide, Load capacity 1350 kg / castor set | A | 192,– | 15,– | 207,– |
| Heavy-duty Castor Set, polyamide, Load capacity 2550 kg / castor set | A | 379,– | 15,– | 394,– |
| Skip Body Welded Oil and Watertight | A | 121,– | 0,– | 121,– |
| **BK 100, hot-dip galvanized** | A | 2070,– | 201,– | 2271,– |
| Lid, galvanized | A | 173,– | 27,– | 200,– |
| Castor Set, polyamide, Load capacity 1350 kg / castor set | A | 192,– | 15,– | 207,– |
| Heavy-duty Castor Set, polyamide, Load capacity 2550 kg / castor set | A | 379,– | 15,– | 394,– |
| Skip Body Welded Oil and Watertight | A | 121,– | 0,– | 121,– |
| **BK 120, painted** | A | 1640,– | 201,– | 1841,– |
| Lid, galvanized | A | 184,– | 32,– | 216,– |
| Castor Set, polyamide, Load capacity 1350 kg / castor set | A | 192,– | 15,– | 207,– |

Prices in EUR, valid EXW DE-46354 Südlohn, DE-38820 Halberstadt, unpacked
Freight charges valid CPT Denmark, islands and oversea territories excluded



BAUER GmbH
Eichendorffstr. 62
46354 Südlohn, Germany

Tel. +49 2862 70 90
info@bauer-suedlohn.com
www.bauer-suedlohn.com

Geschäftsführer
Patrick Bauer, Pascal Bauer
Amtsgericht Coesfeld HRB 5259

TÜVNORD
TÜV NORD CERT GmbH
DIN EN ISO 9001
tuev-nord.de

# Price List 0726 en-DK
# Forklift Truck Attachments

| Tilting Container Type BK | Category | Price | Freight charges | Price including freight charges |
|---|---|---|---|---|
| Heavy-duty Castor Set, polyamide, Load capacity 2550 kg / castor set | A | 379,– | 15,– | 394,– |
| Skip Body Welded Oil and Watertight | A | 121,– | 0,– | 121,– |
| **BK 120, hot-dip galvanized** | A | 2235,– | 201,– | 2436,– |
| Lid, galvanized | A | 184,– | 32,– | 216,– |
| Castor Set, polyamide, Load capacity 1350 kg / castor set | A | 192,– | 15,– | 207,– |
| Heavy-duty Castor Set, polyamide, Load capacity 2550 kg / castor set | A | 379,– | 15,– | 394,– |
| Skip Body Welded Oil and Watertight | A | 121,– | 0,– | 121,– |
| **BK 150, painted** | A | 1801,– | 256,– | 2057,– |
| Lid, galvanized | A | 211,– | 39,– | 250,– |
| Castor Set, polyamide, Load capacity 1350 kg / castor set | A | 192,– | 15,– | 207,– |
| Heavy-duty Castor Set, polyamide, Load capacity 2550 kg / castor set | A | 379,– | 15,– | 394,– |
| Skip Body Welded Oil and Watertight | A | 121,– | 0,– | 121,– |
| **BK 150, hot-dip galvanized** | A | 2444,– | 256,– | 2700,– |
| Lid, galvanized | A | 211,– | 39,– | 250,– |
| Castor Set, polyamide, Load capacity 1350 kg / castor set | A | 192,– | 15,– | 207,– |
| Heavy-duty Castor Set, polyamide, Load capacity 2550 kg / castor set | A | 379,– | 15,– | 394,– |
| Skip Body Welded Oil and Watertight | A | 121,– | 0,– | 121,– |
| **BK 200, painted** | A | 2240,– | 256,– | 2496,– |
| Lid, galvanized | A | 223,– | 106,– | 329,– |
| Castor Set, polyamide, Load capacity 1350 kg / castor set | A | 192,– | 15,– | 207,– |
| Heavy-duty Castor Set, polyamide, Load capacity 2550 kg / castor set | A | 379,– | 15,– | 394,– |
| Skip Body Welded Oil and Watertight | A | 121,– | 0,– | 121,– |
| **BK 200, hot-dip galvanized** | A | 3052,– | 335,– | 3387,– |
| Lid, galvanized | A | 223,– | 106,– | 329,– |
| Castor Set, polyamide, Load capacity 1350 kg / castor set | A | 192,– | 15,– | 207,– |
| Heavy-duty Castor Set, polyamide, Load capacity 2550 kg / castor set | A | 379,– | 15,– | 394,– |
| Skip Body Welded Oil and Watertight | A | 121,– | 0,– | 121,– |

| Container With Drop Away Base Type BKB | Category | Price | Freight charges | Price including freight charges |
|---|---|---|---|---|
| **BKB 500, painted** | A | 763,– | 143,– | 906,– |
| Lid, galvanized | A | 196,– | 18,– | 214,– |
| Castor Set, polyamide, Load capacity 1350 kg / castor set | A | 192,– | 15,– | 207,– |
| **BKB 500, hot-dip galvanized** | A | 907,– | 143,– | 1050,– |
| Lid, galvanized | A | 196,– | 18,– | 214,– |
| Castor Set, polyamide, Load capacity 1350 kg / castor set | A | 192,– | 15,– | 207,– |
| **BKB 700, painted** | A | 816,– | 143,– | 959,– |
| Lid, galvanized | A | 196,– | 18,– | 214,– |
| Castor Set, polyamide, Load capacity 1350 kg / castor set | A | 192,– | 15,– | 207,– |
| **BKB 700, hot-dip galvanized** | A | 960,– | 143,– | 1103,– |
| Lid, galvanized | A | 196,– | 18,– | 214,– |
| Castor Set, polyamide, Load capacity 1350 kg / castor set | A | 192,– | 15,– | 207,– |
| **BKB 1000, painted** | A | 865,– | 143,– | 1008,– |
| Lid, galvanized | A | 196,– | 18,– | 214,– |
| Castor Set, polyamide, Load capacity 1350 kg / castor set | A | 192,– | 15,– | 207,– |
| **BKB 1000, hot-dip galvanized** | A | 1029,– | 143,– | 1172,– |
| Lid, galvanized | A | 196,– | 18,– | 214,– |

Prices in EUR, valid EXW DE-46354 Südlohn, DE-38820 Halberstadt, unpacked
Freight charges valid CPT Denmark, islands and oversea territories excluded



BAUER GmbH
Eichendorffstr. 62
46354 Südlohn, Germany

Tel. +49 2862 70 90
info@bauer-suedlohn.com
www.bauer-suedlohn.com

Geschäftsführer
Patrick Bauer, Pascal Bauer
Amtsgericht Coesfeld HRB 5259

TÜVNORD
TÜV NORD CERT GmbH
DIN EN ISO 9001
tuev-nord.de

# Price List 0726 en-DK
# Forklift Truck Attachments

| Container With Drop Away Base Type BKB | Category | Price | Freight charges | Price including freight charges |
|---|---|---|---|---|
| Castor Set, polyamide, Load capacity 1350 kg / castor set | A | 192,– | 15,– | 207,– |

| Tilting Container Type BKC | Category | Price | Freight charges | Price including freight charges |
|---|---|---|---|---|
| **BKC 200, painted** | A | 2308,– | 335,– | 2643,– |
| Lid, galvanized | A | 450,– | 106,– | 556,– |
| Skip Body Welded Oil and Watertight | A | 121,– | 0,– | 121,– |
| **BKC 200, hot-dip galvanized** | A | 3089,– | 335,– | 3424,– |
| Lid, galvanized | A | 450,– | 106,– | 556,– |
| Skip Body Welded Oil and Watertight | A | 121,– | 0,– | 121,– |
| **BKC 300, painted** | A | 2558,– | 335,– | 2893,– |
| Lid, galvanized | A | 450,– | 106,– | 556,– |
| Skip Body Welded Oil and Watertight | A | 121,– | 0,– | 121,– |
| **BKC 300, hot-dip galvanized** | A | 3367,– | 335,– | 3702,– |
| Lid, galvanized | A | 450,– | 106,– | 556,– |
| Skip Body Welded Oil and Watertight | A | 121,– | 0,– | 121,– |
| **BKC 400, painted** | A | 3150,– | 335,– | 3485,– |
| Lid, galvanized | A | 450,– | 143,– | 593,– |
| Skip Body Welded Oil and Watertight | A | 121,– | 0,– | 121,– |
| **BKC 400, hot-dip galvanized** | A | 4067,– | 439,– | 4506,– |
| Lid, galvanized | A | 450,– | 143,– | 593,– |
| Skip Body Welded Oil and Watertight | A | 121,– | 0,– | 121,– |
| **BKC 500, painted** | A | 3659,– | 439,– | 4098,– |
| Lid, galvanized | A | 450,– | 143,– | 593,– |
| Skip Body Welded Oil and Watertight | A | 121,– | 0,– | 121,– |
| **BKC 500, hot-dip galvanized** | A | 4641,– | 439,– | 5080,– |
| Lid, galvanized | A | 450,– | 143,– | 593,– |
| Skip Body Welded Oil and Watertight | A | 121,– | 0,– | 121,– |

| Tilting Container Type BKC-H | Category | Price | Freight charges | Price including freight charges |
|---|---|---|---|---|
| **BKC-H 200, painted** | A | 3422,– | 335,– | 3757,– |
| Lid, galvanized | A | 450,– | 106,– | 556,– |
| Skip Body Welded Oil and Watertight | A | 121,– | 0,– | 121,– |
| **BKC-H 200, hot-dip galvanized** | A | 4204,– | 335,– | 4539,– |
| Lid, galvanized | A | 450,– | 106,– | 556,– |
| Skip Body Welded Oil and Watertight | A | 121,– | 0,– | 121,– |
| **BKC-H 300, painted** | A | 3673,– | 335,– | 4008,– |
| Lid, galvanized | A | 450,– | 106,– | 556,– |
| Skip Body Welded Oil and Watertight | A | 121,– | 0,– | 121,– |
| **BKC-H 300, hot-dip galvanized** | A | 4483,– | 335,– | 4818,– |
| Lid, galvanized | A | 450,– | 106,– | 556,– |
| Skip Body Welded Oil and Watertight | A | 121,– | 0,– | 121,– |
| **BKC-H 400, painted** | A | 4265,– | 335,– | 4600,– |
| Lid, galvanized | A | 450,– | 143,– | 593,– |
| Skip Body Welded Oil and Watertight | A | 121,– | 0,– | 121,– |
| **BKC-H 400, hot-dip galvanized** | A | 5182,– | 439,– | 5621,– |

Prices in EUR, valid EXW DE-46354 Südlohn, DE-38820 Halberstadt, unpacked
Freight charges valid CPT Denmark, islands and oversea territories excluded



BAUER GmbH
Eichendorffstr. 62
46354 Südlohn, Germany

Tel. +49 2862 70 90
info@bauer-suedlohn.com
www.bauer-suedlohn.com

Geschäftsführer
Patrick Bauer, Pascal Bauer
Amtsgericht Coesfeld HRB 5259

TÜVNORD
TÜV NORD CERT GmbH
DIN EN ISO 9001
tuev-nord.de

# Price List 0726 en-DK
# Forklift Truck Attachments

| Tilting Container Type BKC-H | Category | Price | Freight charges | Price including freight charges |
|---|---|---|---|---|
| Lid, galvanized | A | 450,– | 143,– | 593,– |
| Skip Body Welded Oil and Watertight | A | 121,– | 0,– | 121,– |
| **BKC-H 500, painted** | A | 4774,– | 439,– | 5213,– |
| Lid, galvanized | A | 450,– | 143,– | 593,– |
| Skip Body Welded Oil and Watertight | A | 121,– | 0,– | 121,– |
| **BKC-H 500, hot-dip galvanized** | A | 5756,– | 439,– | 6195,– |
| Lid, galvanized | A | 450,– | 143,– | 593,– |
| Skip Body Welded Oil and Watertight | A | 121,– | 0,– | 121,– |

| Tilting Container Type BKM | Category | Price | Freight charges | Price including freight charges |
|---|---|---|---|---|
| **BKM 30, painted** | A | 700,– | 143,– | 843,– |
| Lid, galvanized | A | 104,– | 18,– | 122,– |
| Castor Set, polyamide, Load capacity 1350 kg / castor set | A | 192,– | 15,– | 207,– |
| Heavy-duty Castor Set, polyamide, Load capacity 2550 kg / castor set | A | 379,– | 15,– | 394,– |
| Skip Body Welded Oil and Watertight | A | 78,– | 0,– | 78,– |
| **BKM 30, hot-dip galvanized** | A | 984,– | 143,– | 1127,– |
| Lid, galvanized | A | 104,– | 18,– | 122,– |
| Castor Set, polyamide, Load capacity 1350 kg / castor set | A | 192,– | 15,– | 207,– |
| Heavy-duty Castor Set, polyamide, Load capacity 2550 kg / castor set | A | 379,– | 15,– | 394,– |
| Skip Body Welded Oil and Watertight | A | 78,– | 0,– | 78,– |
| **BKM 50, painted** | A | 984,– | 143,– | 1127,– |
| Lid, galvanized | A | 130,– | 21,– | 151,– |
| Castor Set, polyamide, Load capacity 1350 kg / castor set | A | 192,– | 15,– | 207,– |
| Heavy-duty Castor Set, polyamide, Load capacity 2550 kg / castor set | A | 379,– | 15,– | 394,– |
| Skip Body Welded Oil and Watertight | A | 78,– | 0,– | 78,– |
| **BKM 50, hot-dip galvanized** | A | 1327,– | 143,– | 1470,– |
| Lid, galvanized | A | 130,– | 21,– | 151,– |
| Castor Set, polyamide, Load capacity 1350 kg / castor set | A | 192,– | 15,– | 207,– |
| Heavy-duty Castor Set, polyamide, Load capacity 2550 kg / castor set | A | 379,– | 15,– | 394,– |
| Skip Body Welded Oil and Watertight | A | 78,– | 0,– | 78,– |
| **BKM 75, painted** | A | 1246,– | 201,– | 1447,– |
| Lid, galvanized | A | 142,– | 22,– | 164,– |
| Castor Set, polyamide, Load capacity 1350 kg / castor set | A | 192,– | 15,– | 207,– |
| Heavy-duty Castor Set, polyamide, Load capacity 2550 kg / castor set | A | 379,– | 15,– | 394,– |
| Skip Body Welded Oil and Watertight | A | 78,– | 0,– | 78,– |
| **BKM 75, hot-dip galvanized** | A | 1672,– | 201,– | 1873,– |
| Lid, galvanized | A | 142,– | 22,– | 164,– |
| Castor Set, polyamide, Load capacity 1350 kg / castor set | A | 192,– | 15,– | 207,– |
| Heavy-duty Castor Set, polyamide, Load capacity 2550 kg / castor set | A | 379,– | 15,– | 394,– |
| Skip Body Welded Oil and Watertight | A | 78,– | 0,– | 78,– |
| **BKM 100, painted** | A | 1508,– | 201,– | 1709,– |
| Lid, galvanized | A | 185,– | 27,– | 212,– |
| Castor Set, polyamide, Load capacity 1350 kg / castor set | A | 192,– | 15,– | 207,– |
| Heavy-duty Castor Set, polyamide, Load capacity 2550 kg / castor set | A | 379,– | 15,– | 394,– |
| Skip Body Welded Oil and Watertight | A | 121,– | 0,– | 121,– |
| **BKM 100, hot-dip galvanized** | A | 2070,– | 201,– | 2271,– |

Prices in EUR, valid EXW DE-46354 Südlohn, DE-38820 Halberstadt, unpacked
Freight charges valid CPT Denmark, islands and oversea territories excluded



BAUER GmbH
Eichendorffstr. 62
46354 Südlohn, Germany

Tel. +49 2862 70 90
info@bauer-suedlohn.com
www.bauer-suedlohn.com

Geschäftsführer
Patrick Bauer, Pascal Bauer
Amtsgericht Coesfeld HRB 5259

TÜVNORD
TÜV NORD CERT GmbH
DIN EN ISO 9001
tuev-nord.de

# Price List 0726 en-DK
# Forklift Truck Attachments

| Tilting Container Type BKM | Category | Price | Freight charges | Price including freight charges |
|---|---|---|---|---|
| Lid, galvanized | A | 185,– | 27,– | 212,– |
| Castor Set, polyamide, Load capacity 1350 kg / castor set | A | 192,– | 15,– | 207,– |
| Heavy-duty Castor Set, polyamide, Load capacity 2550 kg / castor set | A | 379,– | 15,– | 394,– |
| Skip Body Welded Oil and Watertight | A | 121,– | 0,– | 121,– |
| **BKM 150, painted** | A | 1801,– | 256,– | 2057,– |
| Lid, galvanized | A | 271,– | 36,– | 307,– |
| Castor Set, polyamide, Load capacity 1350 kg / castor set | A | 192,– | 15,– | 207,– |
| Heavy-duty Castor Set, polyamide, Load capacity 2550 kg / castor set | A | 379,– | 15,– | 394,– |
| Skip Body Welded Oil and Watertight | A | 121,– | 0,– | 121,– |
| **BKM 150, hot-dip galvanized** | A | 2444,– | 256,– | 2700,– |
| Lid, galvanized | A | 271,– | 36,– | 307,– |
| Castor Set, polyamide, Load capacity 1350 kg / castor set | A | 192,– | 15,– | 207,– |
| Heavy-duty Castor Set, polyamide, Load capacity 2550 kg / castor set | A | 379,– | 15,– | 394,– |
| Skip Body Welded Oil and Watertight | A | 121,– | 0,– | 121,– |
| **BKM 200, painted** | A | 2240,– | 256,– | 2496,– |
| Lid, galvanized | A | 302,– | 106,– | 408,– |
| Castor Set, polyamide, Load capacity 1350 kg / castor set | A | 192,– | 15,– | 207,– |
| Heavy-duty Castor Set, polyamide, Load capacity 2550 kg / castor set | A | 379,– | 15,– | 394,– |
| Skip Body Welded Oil and Watertight | A | 121,– | 0,– | 121,– |
| Lid, galvanized | A | 302,– | 106,– | 408,– |
| Castor Set, polyamide, Load capacity 1350 kg / castor set | A | 192,– | 15,– | 207,– |
| Heavy-duty Castor Set, polyamide, Load capacity 2550 kg / castor set | A | 379,– | 15,– | 394,– |
| Skip Body Welded Oil and Watertight | A | 121,– | 0,– | 121,– |

| Traverse For Stacking Tippers Type BKT | Category | Price | Freight charges | Price including freight charges |
|---|---|---|---|---|
| **BKT 30, painted** | A | 368,– | 143,– | 511,– |
| Traverse Stand Type TS, hot-dip galvanized | A | 78,– | 8,– | 86,– |
| **BKT 55, painted** | A | 390,– | 143,– | 533,– |
| Traverse Stand Type TS, hot-dip galvanized | A | 78,– | 9,– | 87,– |
| **BKT 70, painted** | A | 390,– | 143,– | 533,– |
| Traverse Stand Type TS, hot-dip galvanized | A | 78,– | 9,– | 87,– |
| **BKT 90, painted** | A | 392,– | 143,– | 535,– |
| Traverse Stand Type TS, hot-dip galvanized | A | 78,– | 9,– | 87,– |
| **BKT 150, painted** | A | 631,– | 143,– | 774,– |
| Traverse Stand Type TS, hot-dip galvanized | A | 78,– | 9,– | 87,– |
| **BKT 200, painted** | A | 696,– | 143,– | 839,– |
| Traverse Stand Type TS, hot-dip galvanized | A | 78,– | 9,– | 87,– |

| Shovel Type BSE | Category | Price | Freight charges | Price including freight charges |
|---|---|---|---|---|
| **BSE 50, painted** | A | 1486,– | 201,– | 1687,– |
| **BSE 75, painted** | A | 1769,– | 201,– | 1970,– |
| **BSE 100, painted** | A | 2219,– | 256,– | 2475,– |
| **BSE 150, painted** | A | 2507,– | 256,– | 2763,– |
| **BSE 200, painted** | A | 2786,– | 335,– | 3121,– |
| **BSE 250, painted** | A | 3433,– | 388,– | 3821,– |

Prices in EUR, valid EXW DE-46354 Südlohn, DE-38820 Halberstadt, unpacked
Freight charges valid CPT Denmark, islands and oversea territories excluded



BAUER GmbH
Eichendorffstr. 62
46354 Südlohn, Germany

Tel. +49 2862 70 90
info@bauer-suedlohn.com
www.bauer-suedlohn.com

Geschäftsführer
Patrick Bauer, Pascal Bauer
Amtsgericht Coesfeld HRB 5259

TÜVNORD
TÜV NORD CERT GmbH
DIN EN ISO 9001
tuev-nord.de

# Price List 0726 en-DK
# Forklift Truck Attachments

| Shovel Type BSI | Category | Price | Freight charges | Price including freight charges |
|---|---|---|---|---|
| **BSI 50, painted** | A | 1257,– | 143,– | 1400,– |
| **BSI 75, painted** | A | 1424,– | 201,– | 1625,– |
| **BSI 100, painted** | A | 1786,– | 201,– | 1987,– |

| Stacking Tipper Type BSK | Category | Price | Freight charges | Price including freight charges |
|---|---|---|---|---|
| **BSK 30, painted** | A | 265,– | 106,– | 371,– |
| Lid, galvanized | A | 69,– | 12,– | 81,– |
| Castor Set, polyamide, Load capacity 1350 kg / castor set | A | 192,– | 15,– | 207,– |
| Skip Body Welded Oil and Watertight | A | 78,– | 0,– | 78,– |
| Set of 5 self-adhesive stickers with symbols for: glass, paper, plastic, metal, residual waste | A | 29,– | on request | on request |
| **BSK 30, hot-dip galvanized** | A | 320,– | 106,– | 426,– |
| Lid, galvanized | A | 69,– | 12,– | 81,– |
| Castor Set, polyamide, Load capacity 1350 kg / castor set | A | 192,– | 15,– | 207,– |
| Skip Body Welded Oil and Watertight | A | 78,– | 0,– | 78,– |
| Set of 5 self-adhesive stickers with symbols for: glass, paper, plastic, metal, residual waste | A | 29,– | on request | on request |
| **BSK 55, painted** | A | 332,– | 106,– | 438,– |
| Lid, galvanized | A | 98,– | 15,– | 113,– |
| Castor Set, polyamide, Load capacity 1350 kg / castor set | A | 192,– | 15,– | 207,– |
| Skip Body Welded Oil and Watertight | A | 78,– | 0,– | 78,– |
| Set of 5 self-adhesive stickers with symbols for: glass, paper, plastic, metal, residual waste | A | 29,– | on request | on request |
| **BSK 55, hot-dip galvanized** | A | 405,– | 106,– | 511,– |
| Lid, galvanized | A | 98,– | 15,– | 113,– |
| Castor Set, polyamide, Load capacity 1350 kg / castor set | A | 192,– | 15,– | 207,– |
| Skip Body Welded Oil and Watertight | A | 78,– | 0,– | 78,– |
| Set of 5 self-adhesive stickers with symbols for: glass, paper, plastic, metal, residual waste | A | 29,– | on request | on request |
| **BSK 70, painted** | A | 352,– | 106,– | 458,– |
| Lid, galvanized | A | 122,– | 15,– | 137,– |
| Castor Set, polyamide, Load capacity 1350 kg / castor set | A | 192,– | 15,– | 207,– |
| Skip Body Welded Oil and Watertight | A | 78,– | 0,– | 78,– |
| Set of 5 self-adhesive stickers with symbols for: glass, paper, plastic, metal, residual waste | A | 29,– | on request | on request |
| **BSK 70, hot-dip galvanized** | A | 457,– | 106,– | 563,– |
| Lid, galvanized | A | 122,– | 15,– | 137,– |
| Castor Set, polyamide, Load capacity 1350 kg / castor set | A | 192,– | 15,– | 207,– |
| Skip Body Welded Oil and Watertight | A | 78,– | 0,– | 78,– |
| Set of 5 self-adhesive stickers with symbols for: glass, paper, plastic, metal, residual waste | A | 29,– | on request | on request |
| **BSK 90, painted** | A | 379,– | 106,– | 485,– |
| Lid, galvanized | A | 166,– | 18,– | 184,– |
| Castor Set, polyamide, Load capacity 1350 kg / castor set | A | 192,– | 15,– | 207,– |
| Skip Body Welded Oil and Watertight | A | 78,– | 0,– | 78,– |
| Set of 5 self-adhesive stickers with symbols for: glass, paper, plastic, metal, residual waste | A | 29,– | on request | on request |
| **BSK 90, hot-dip galvanized** | A | 487,– | 143,– | 630,– |
| Lid, galvanized | A | 166,– | 18,– | 184,– |
| Castor Set, polyamide, Load capacity 1350 kg / castor set | A | 192,– | 15,– | 207,– |
| Skip Body Welded Oil and Watertight | A | 78,– | 0,– | 78,– |
| Set of 5 self-adhesive stickers with symbols for: glass, paper, plastic, metal, residual waste | A | 29,– | on request | on request |
| **BSK 150, painted** | A | 871,– | 143,– | 1014,– |

Prices in EUR, valid EXW DE-46354 Südlohn, DE-38820 Halberstadt, unpacked
Freight charges valid CPT Denmark, islands and oversea territories excluded



BAUER GmbH
Eichendorffstr. 62
46354 Südlohn, Germany

Tel. +49 2862 70 90
info@bauer-suedlohn.com
www.bauer-suedlohn.com

Geschäftsführer
Patrick Bauer, Pascal Bauer
Amtsgericht Coesfeld HRB 5259

TÜVNORD
TÜV NORD CERT GmbH
DIN EN ISO 9001
tuev-nord.de

# Price List 0726 en-DK
# Forklift Truck Attachments

| Stacking Tipper Type BSK | Category | Price | Freight charges | Price including freight charges |
|---|---|---|---|---|
| Lid, galvanized | A | 223,– | 21,– | 244,– |
| Castor Set, polyamide, Load capacity 1350 kg / castor set | A | 192,– | 15,– | 207,– |
| Skip Body Welded Oil and Watertight | A | 121,– | 0,– | 121,– |
| Set of 5 self-adhesive stickers with symbols for: glass, paper, plastic, metal, residual waste | A | 29,– | on request | on request |
| **BSK 150, hot-dip galvanized** | A | 1019,– | 143,– | 1162,– |
| Lid, galvanized | A | 223,– | 21,– | 244,– |
| Castor Set, polyamide, Load capacity 1350 kg / castor set | A | 192,– | 15,– | 207,– |
| Skip Body Welded Oil and Watertight | A | 121,– | 0,– | 121,– |
| Set of 5 self-adhesive stickers with symbols for: glass, paper, plastic, metal, residual waste | A | 29,– | on request | on request |
| **BSK 200, painted** | A | 934,– | 143,– | 1077,– |
| Lid, galvanized | A | 284,– | 26,– | 310,– |
| Castor Set, polyamide, Load capacity 1350 kg / castor set | A | 192,– | 15,– | 207,– |
| Skip Body Welded Oil and Watertight | A | 121,– | 0,– | 121,– |
| Set of 5 self-adhesive stickers with symbols for: glass, paper, plastic, metal, residual waste | A | 29,– | on request | on request |
| **BSK 200, hot-dip galvanized** | A | 1169,– | 143,– | 1312,– |
| Lid, galvanized | A | 284,– | 26,– | 310,– |
| Castor Set, polyamide, Load capacity 1350 kg / castor set | A | 192,– | 15,– | 207,– |
| Skip Body Welded Oil and Watertight | A | 121,– | 0,– | 121,– |
| Set of 5 self-adhesive stickers with symbols for: glass, paper, plastic, metal, residual waste | A | 29,– | on request | on request |

| Lattice Tilting Container Type BSK-G | Category | Price | Freight charges | Price including freight charges |
|---|---|---|---|---|
| **BSK-G 90, painted** | A | 344,– | 106,– | 450,– |
| Lid, galvanized | A | 166,– | 18,– | 184,– |
| Castor Set, polyamide, Load capacity 1350 kg / castor set | A | 192,– | 15,– | 207,– |
| **BSK-G 90, hot-dip galvanized** | A | 419,– | 106,– | 525,– |
| Lid, galvanized | A | 166,– | 18,– | 184,– |
| Castor Set, polyamide, Load capacity 1350 kg / castor set | A | 192,– | 15,– | 207,– |

| Swarf Stacking Tipper Type BSL | Category | Price | Freight charges | Price including freight charges |
|---|---|---|---|---|
| **BSL 30, painted** | A | 590,– | 106,– | 696,– |
| Lid, galvanized | A | 69,– | 12,– | 81,– |
| Castor Set, polyamide, Load capacity 1350 kg / castor set | A | 192,– | 15,– | 207,– |
| **BSL 30, hot-dip galvanized** | A | 679,– | 106,– | 785,– |
| Lid, galvanized | A | 69,– | 12,– | 81,– |
| Castor Set, polyamide, Load capacity 1350 kg / castor set | A | 192,– | 15,– | 207,– |
| **BSL 55, painted** | A | 726,– | 143,– | 869,– |
| Lid, galvanized | A | 98,– | 15,– | 113,– |
| Castor Set, polyamide, Load capacity 1350 kg / castor set | A | 192,– | 15,– | 207,– |
| **BSL 55, hot-dip galvanized** | A | 852,– | 143,– | 995,– |
| Lid, galvanized | A | 98,– | 15,– | 113,– |
| Castor Set, polyamide, Load capacity 1350 kg / castor set | A | 192,– | 15,– | 207,– |
| **BSL 70, painted** | A | 763,– | 143,– | 906,– |
| Lid, galvanized | A | 122,– | 15,– | 137,– |
| Castor Set, polyamide, Load capacity 1350 kg / castor set | A | 192,– | 15,– | 207,– |
| **BSL 70, hot-dip galvanized** | A | 912,– | 143,– | 1055,– |

Prices in EUR, valid EXW DE-46354 Südlohn, DE-38820 Halberstadt, unpacked
Freight charges valid CPT Denmark, islands and oversea territories excluded



BAUER GmbH
Eichendorffstr. 62
46354 Südlohn, Germany

Tel. +49 2862 70 90
info@bauer-suedlohn.com
www.bauer-suedlohn.com

Geschäftsführer
Patrick Bauer, Pascal Bauer
Amtsgericht Coesfeld HRB 5259

TÜVNORD
TÜV NORD CERT GmbH
DIN EN ISO 9001
tuev-nord.de

# Price List 0726 en-DK
# Forklift Truck Attachments

| Swarf Stacking Tipper Type BSL | Category | Price | Freight charges | Price including freight charges |
|---|---|---|---|---|
| Lid, galvanized | A | 122,– | 15,– | 137,– |
| Castor Set, polyamide, Load capacity 1350 kg / castor set | A | 192,– | 15,– | 207,– |
| **BSL 90, painted** | A | 830,– | 143,– | 973,– |
| Lid, galvanized | A | 166,– | 18,– | 184,– |
| Castor Set, polyamide, Load capacity 1350 kg / castor set | A | 192,– | 15,– | 207,– |
| **BSL 90, hot-dip galvanized** | A | 1004,– | 143,– | 1147,– |
| Lid, galvanized | A | 166,– | 18,– | 184,– |
| Castor Set, polyamide, Load capacity 1350 kg / castor set | A | 192,– | 15,– | 207,– |
| **BSL 150, painted** | A | 1227,– | 143,– | 1370,– |
| Lid, galvanized | A | 223,– | 21,– | 244,– |
| Castor Set, polyamide, Load capacity 1350 kg / castor set | A | 192,– | 15,– | 207,– |
| **BSL 150, hot-dip galvanized** | A | 1490,– | 201,– | 1691,– |
| Lid, galvanized | A | 223,– | 21,– | 244,– |
| Castor Set, polyamide, Load capacity 1350 kg / castor set | A | 192,– | 15,– | 207,– |
| **BSL 200, painted** | A | 1327,– | 201,– | 1528,– |
| Lid, galvanized | A | 284,– | 26,– | 310,– |
| Castor Set, polyamide, Load capacity 1350 kg / castor set | A | 192,– | 15,– | 207,– |
| **BSL 200, hot-dip galvanized** | A | 1792,– | 201,– | 1993,– |
| Lid, galvanized | A | 284,– | 26,– | 310,– |
| Castor Set, polyamide, Load capacity 1350 kg / castor set | A | 192,– | 15,– | 207,– |

| Shovel Type BSM | Category | Price | Freight charges | Price including freight charges |
|---|---|---|---|---|
| **BSM 50, painted** | A | 1486,– | 143,– | 1629,– |
| **BSM 75, painted** | A | 1769,– | 201,– | 1970,– |
| **BSM 100, painted** | A | 2219,– | 256,– | 2475,– |
| **BSM 150, painted** | A | 2507,– | 256,– | 2763,– |
| **BSM 200, painted** | A | 2786,– | 335,– | 3121,– |
| **BSM 250, painted** | A | 3433,– | 388,– | 3821,– |

| Swarf Stacking Tipper Type BSS | Category | Price | Freight charges | Price including freight charges |
|---|---|---|---|---|
| **BSS 30, painted** | A | 422,– | 106,– | 528,– |
| Lid, galvanized | A | 69,– | 12,– | 81,– |
| Castor Set, polyamide, Load capacity 1350 kg / castor set | A | 192,– | 15,– | 207,– |
| **BSS 30, hot-dip galvanized** | A | 490,– | 106,– | 596,– |
| Lid, galvanized | A | 69,– | 12,– | 81,– |
| Castor Set, polyamide, Load capacity 1350 kg / castor set | A | 192,– | 15,– | 207,– |
| **BSS 55, painted** | A | 523,– | 106,– | 629,– |
| Lid, galvanized | A | 98,– | 15,– | 113,– |
| Castor Set, polyamide, Load capacity 1350 kg / castor set | A | 192,– | 15,– | 207,– |
| **BSS 55, hot-dip galvanized** | A | 648,– | 106,– | 754,– |
| Lid, galvanized | A | 98,– | 15,– | 113,– |
| Castor Set, polyamide, Load capacity 1350 kg / castor set | A | 192,– | 15,– | 207,– |
| **BSS 70, painted** | A | 561,– | 106,– | 667,– |
| Lid, galvanized | A | 122,– | 15,– | 137,– |
| Castor Set, polyamide, Load capacity 1350 kg / castor set | A | 192,– | 15,– | 207,– |

Prices in EUR, valid EXW DE-46354 Südlohn, DE-38820 Halberstadt, unpacked
Freight charges valid CPT Denmark, islands and oversea territories excluded



BAUER GmbH
Eichendorffstr. 62
46354 Südlohn, Germany

Tel. +49 2862 70 90
info@bauer-suedlohn.com
www.bauer-suedlohn.com

Geschäftsführer
Patrick Bauer, Pascal Bauer
Amtsgericht Coesfeld HRB 5259

TÜVNORD
TÜV NORD CERT GmbH
DIN EN ISO 9001
tuev-nord.de

# Price List 0726 en-DK
# Forklift Truck Attachments

| Swarf Stacking Tipper Type BSS | Category | Price | Freight charges | Price including freight charges |
|---|---|---|---|---|
| **BSS 70, hot-dip galvanized** | A | 708,– | 143,– | 851,– |
| Lid, galvanized | A | 122,– | 15,– | 137,– |
| Castor Set, polyamide, Load capacity 1350 kg / castor set | A | 192,– | 15,– | 207,– |
| **BSS 90, painted** | A | 597,– | 143,– | 740,– |
| Lid, galvanized | A | 166,– | 18,– | 184,– |
| Castor Set, polyamide, Load capacity 1350 kg / castor set | A | 192,– | 15,– | 207,– |
| **BSS 90, hot-dip galvanized** | A | 765,– | 143,– | 908,– |
| Lid, galvanized | A | 166,– | 18,– | 184,– |
| Castor Set, polyamide, Load capacity 1350 kg / castor set | A | 192,– | 15,– | 207,– |
| **BSS 150, painted** | A | 907,– | 143,– | 1050,– |
| Lid, galvanized | A | 223,– | 21,– | 244,– |
| Castor Set, polyamide, Load capacity 1350 kg / castor set | A | 192,– | 15,– | 207,– |
| **BSS 150, hot-dip galvanized** | A | 1166,– | 143,– | 1309,– |
| Lid, galvanized | A | 223,– | 21,– | 244,– |
| Castor Set, polyamide, Load capacity 1350 kg / castor set | A | 192,– | 15,– | 207,– |
| **BSS 200, painted** | A | 1024,– | 143,– | 1167,– |
| Lid, galvanized | A | 284,– | 26,– | 310,– |
| Castor Set, polyamide, Load capacity 1350 kg / castor set | A | 192,– | 15,– | 207,– |
| **BSS 200, hot-dip galvanized** | A | 1371,– | 201,– | 1572,– |
| Lid, galvanized | A | 284,– | 26,– | 310,– |
| Castor Set, polyamide, Load capacity 1350 kg / castor set | A | 192,– | 15,– | 207,– |

| Traverse For Stacking Tippers Type BST | Category | Price | Freight charges | Price including freight charges |
|---|---|---|---|---|
| **BST 30, painted** | A | 332,– | 106,– | 438,– |
| Traverse Stand Type TS, hot-dip galvanized | A | 78,– | 8,– | 86,– |
| **BST 55, painted** | A | 354,– | 106,– | 460,– |
| Traverse Stand Type TS, hot-dip galvanized | A | 78,– | 9,– | 87,– |
| **BST 70, painted** | A | 354,– | 106,– | 460,– |
| Traverse Stand Type TS, hot-dip galvanized | A | 78,– | 9,– | 87,– |
| **BST 90, painted** | A | 368,– | 106,– | 474,– |
| Traverse Stand Type TS, hot-dip galvanized | A | 78,– | 9,– | 87,– |
| **BST 150, painted** | A | 551,– | 143,– | 694,– |
| Traverse Stand Type TS, hot-dip galvanized | A | 78,– | 9,– | 87,– |
| **BST 200, painted** | A | 612,– | 143,– | 755,– |
| Traverse Stand Type TS, hot-dip galvanized | A | 78,– | 9,– | 87,– |

| Traverse For Stacking Tippers Type BST-H | Category | Price | Freight charges | Price including freight charges |
|---|---|---|---|---|
| **BST-H 30, painted** | A | 2127,– | 143,– | 2270,– |
| Traverse Stand Type TS, hot-dip galvanized | A | 78,– | 8,– | 86,– |
| **BST-H 55, painted** | A | 2257,– | 143,– | 2400,– |
| Traverse Stand Type TS, hot-dip galvanized | A | 78,– | 8,– | 86,– |
| **BST-H 70, painted** | A | 2257,– | 143,– | 2400,– |
| Traverse Stand Type TS, hot-dip galvanized | A | 78,– | 8,– | 86,– |
| **BST-H 90, painted** | A | 2374,– | 143,– | 2517,– |
| Traverse Stand Type TS, hot-dip galvanized | A | 78,– | 8,– | 86,– |

Prices in EUR, valid EXW DE-46354 Südlohn, DE-38820 Halberstadt, unpacked
Freight charges valid CPT Denmark, islands and oversea territories excluded



BAUER GmbH
Eichendorffstr. 62
46354 Südlohn, Germany

Tel. +49 2862 70 90
info@bauer-suedlohn.com
www.bauer-suedlohn.com

Geschäftsführer
Patrick Bauer, Pascal Bauer
Amtsgericht Coesfeld HRB 5259

TÜVNORD
TÜV NORD CERT GmbH
DIN EN ISO 9001
tuev-nord.de

# Price List 0726 en-DK
# Forklift Truck Attachments

| Traverse For Stacking Tippers Type BST-H | Category | Price | Freight charges | Price including freight charges |
|---|---|---|---|---|
| **BST-H 150, painted** | A | 2700,– | 201,– | 2901,– |
| Traverse Stand Type TS, hot-dip galvanized | A | 78,– | 9,– | 87,– |
| **BST-H 200, painted** | A | 2972,– | 201,– | 3173,– |
| Traverse Stand Type TS, hot-dip galvanized | A | 78,– | 9,– | 87,– |

| Traverse For Stacking Tippers Type BST-U | Category | Price | Freight charges | Price including freight charges |
|---|---|---|---|---|
| **BST-U 30, painted** | A | 956,– | 143,– | 1099,– |
| **BST-U 55, painted** | A | 1020,– | 143,– | 1163,– |
| **BST-U 70, painted** | A | 1020,– | 143,– | 1163,– |
| **BST-U 90, painted** | A | 1047,– | 143,– | 1190,– |

| Beam Traverse Type BT | Category | Price | Freight charges | Price including freight charges |
|---|---|---|---|---|
| **BT 3001, painted** | A | 1877,– | 224,– | 2101,– |
| Support frames, hot-dip galvanized | A | 276,– | 106,– | 382,– |
| **BT 3002, painted** | A | 2117,– | 224,– | 2341,– |
| Support frames, hot-dip galvanized | A | 276,– | 106,– | 382,– |
| **BT 3003, painted** | A | 2276,– | 224,– | 2500,– |
| Support frames, hot-dip galvanized | A | 276,– | 106,– | 382,– |
| **BT 3005, painted** | A | 2596,– | 282,– | 2878,– |
| Support frames, hot-dip galvanized | A | 276,– | 106,– | 382,– |

| Filling Hopper Type BTM | Category | Price | Freight charges | Price including freight charges |
|---|---|---|---|---|
| **BTM, painted** | A | 2461,– | 256,– | 2717,– |

| Filling Hopper Type BTS | Category | Price | Freight charges | Price including freight charges |
|---|---|---|---|---|
| **BTS, painted** | A | 2107,– | 256,– | 2363,– |

| Bin Type C | Category | Price | Freight charges | Price including freight charges |
|---|---|---|---|---|
| **C 30, painted** | A | 422,– | 106,– | 528,– |
| **C 30, hot-dip galvanized** | A | 463,– | 106,– | 569,– |
| **C 80, painted** | A | 607,– | 106,– | 713,– |
| **C 80, hot-dip galvanized** | A | 653,– | 106,– | 759,– |

| Swarf Bin Type CS | Category | Price | Freight charges | Price including freight charges |
|---|---|---|---|---|
| **CS 30, painted** | A | 486,– | 106,– | 592,– |
| **CS 30, hot-dip galvanized** | A | 532,– | 106,– | 638,– |
| **CS 80, painted** | A | 717,– | 106,– | 823,– |
| **CS 80, hot-dip galvanized** | A | 766,– | 143,– | 909,– |

| Shovel Type DGS | Category | Price | Freight charges | Price including freight charges |
|---|---|---|---|---|
| **DGS 500, painted** | A | 2655,– | 201,– | 2856,– |
| **DGS 700, painted** | A | 2685,– | 201,– | 2886,– |
| **DGS 950, painted** | A | 2723,– | 256,– | 2979,– |
| **DGS 1200, painted** | A | 2924,– | 256,– | 3180,– |

Prices in EUR, valid EXW DE-46354 Südlohn, DE-38820 Halberstadt, unpacked
Freight charges valid CPT Denmark, islands and oversea territories excluded



BAUER GmbH
Eichendorffstr. 62
46354 Südlohn, Germany

Tel. +49 2862 70 90
info@bauer-suedlohn.com
www.bauer-suedlohn.com

Geschäftsführer
Patrick Bauer, Pascal Bauer
Amtsgericht Coesfeld HRB 5259

TÜVNORD
TÜV NORD CERT GmbH
DIN EN ISO 9001
tuev-nord.de

# Price List 0726 en-DK
# Forklift Truck Attachments

| Tilting Container Type DUO | Category | Price | Freight charges | Price including freight charges |
|---|---|---|---|---|
| **DUO, painted** | A | 1867,– | 201,– | 2068,– |
| Lid, galvanized | A | 236,– | 27,– | 263,– |
| Castor Set, polyamide, Load capacity 1350 kg / castor set | A | 192,– | 15,– | 207,– |
| Set of 5 self-adhesive stickers with symbols for: glass, paper, plastic, metal, residual waste | A | 29,– | on request | on request |

| Tilting Container Type EXPO® | Category | Price | Freight charges | Price including freight charges |
|---|---|---|---|---|
| **EXPO 150, painted** | A | 608,– | 106,– | 714,– |
| Lid, galvanized | A | 174,– | 18,– | 192,– |
| Castor Set, polyamide, Load capacity 1050 kg / castor set | A | 156,– | 15,– | 171,– |
| Skip Body Welded Oil and Watertight | A | 78,– | 0,– | 78,– |
| **EXPO 150, hot-dip galvanized** | A | 717,– | 106,– | 823,– |
| Lid, galvanized | A | 174,– | 18,– | 192,– |
| Castor Set, polyamide, Load capacity 1050 kg / castor set | A | 156,– | 15,– | 171,– |
| Skip Body Welded Oil and Watertight | A | 78,– | 0,– | 78,– |
| **EXPO 225, painted** | A | 662,– | 106,– | 768,– |
| Lid, galvanized | A | 174,– | 18,– | 192,– |
| Castor Set, polyamide, Load capacity 1050 kg / castor set | A | 156,– | 15,– | 171,– |
| Skip Body Welded Oil and Watertight | A | 78,– | 0,– | 78,– |
| **EXPO 225, hot-dip galvanized** | A | 785,– | 106,– | 891,– |
| Lid, galvanized | A | 174,– | 18,– | 192,– |
| Castor Set, polyamide, Load capacity 1050 kg / castor set | A | 156,– | 15,– | 171,– |
| Skip Body Welded Oil and Watertight | A | 78,– | 0,– | 78,– |
| **EXPO 275, painted** | A | 691,– | 106,– | 797,– |
| Lid, galvanized | A | 174,– | 18,– | 192,– |
| Castor Set, polyamide, Load capacity 1050 kg / castor set | A | 156,– | 15,– | 171,– |
| Skip Body Welded Oil and Watertight | A | 78,– | 0,– | 78,– |
| **EXPO 275, hot-dip galvanized** | A | 826,– | 106,– | 932,– |
| Lid, galvanized | A | 174,– | 18,– | 192,– |
| Castor Set, polyamide, Load capacity 1050 kg / castor set | A | 156,– | 15,– | 171,– |
| Skip Body Welded Oil and Watertight | A | 78,– | 0,– | 78,– |
| **EXPO 300, painted** | A | 623,– | 143,– | 766,– |
| Lid, galvanized | A | 174,– | 18,– | 192,– |
| Castor Set, polyamide, Load capacity 1350 kg / castor set | A | 192,– | 15,– | 207,– |
| Skip Body Welded Oil and Watertight | A | 78,– | 0,– | 78,– |
| **EXPO 300, hot-dip galvanized** | A | 798,– | 143,– | 941,– |
| Lid, galvanized | A | 174,– | 18,– | 192,– |
| Castor Set, polyamide, Load capacity 1350 kg / castor set | A | 192,– | 15,– | 207,– |
| Skip Body Welded Oil and Watertight | A | 78,– | 0,– | 78,– |
| **EXPO 600, painted** | A | 733,– | 143,– | 876,– |
| Lid, galvanized | A | 196,– | 22,– | 218,– |
| Castor Set, polyamide, Load capacity 1350 kg / castor set | A | 192,– | 15,– | 207,– |
| Skip Body Welded Oil and Watertight | A | 78,– | 0,– | 78,– |
| **EXPO 600, hot-dip galvanized** | A | 879,– | 143,– | 1022,– |
| Lid, galvanized | A | 196,– | 22,– | 218,– |
| Castor Set, polyamide, Load capacity 1350 kg / castor set | A | 192,– | 15,– | 207,– |
| Skip Body Welded Oil and Watertight | A | 78,– | 0,– | 78,– |

Prices in EUR, valid EXW DE-46354 Südlohn, DE-38820 Halberstadt, unpacked
Freight charges valid CPT Denmark, islands and oversea territories excluded



BAUER GmbH
Eichendorffstr. 62
46354 Südlohn, Germany

Tel. +49 2862 70 90
info@bauer-suedlohn.com
www.bauer-suedlohn.com

Geschäftsführer
Patrick Bauer, Pascal Bauer
Amtsgericht Coesfeld HRB 5259

TÜVNORD
TÜV NORD CERT GmbH
DIN EN ISO 9001
tuev-nord.de

# Price List 0726 en-DK
# Forklift Truck Attachments

| Tilting Container Type EXPO® | Category | Price | Freight charges | Price including freight charges |
|---|---|---|---|---|
| **EXPO 900, painted** | A | 818,– | 143,– | 961,– |
| Lid, galvanized | A | 223,– | 27,– | 250,– |
| Castor Set, polyamide, Load capacity 1350 kg / castor set | A | 192,– | 15,– | 207,– |
| Skip Body Welded Oil and Watertight | A | 78,– | 0,– | 78,– |
| **EXPO 900, hot-dip galvanized** | A | 964,– | 143,– | 1107,– |
| Lid, galvanized | A | 223,– | 27,– | 250,– |
| Castor Set, polyamide, Load capacity 1350 kg / castor set | A | 192,– | 15,– | 207,– |
| Skip Body Welded Oil and Watertight | A | 78,– | 0,– | 78,– |
| **EXPO 1200, painted** | A | 885,– | 201,– | 1086,– |
| Lid, galvanized | A | 223,– | 26,– | 249,– |
| Castor Set, polyamide, Load capacity 1350 kg / castor set | A | 192,– | 15,– | 207,– |
| Skip Body Welded Oil and Watertight | A | 121,– | 0,– | 121,– |
| **EXPO 1200, hot-dip galvanized** | A | 1042,– | 201,– | 1243,– |
| Lid, galvanized | A | 223,– | 26,– | 249,– |
| Castor Set, polyamide, Load capacity 1350 kg / castor set | A | 192,– | 15,– | 207,– |
| Skip Body Welded Oil and Watertight | A | 121,– | 0,– | 121,– |
| **EXPO 1700, painted** | A | 1202,– | 201,– | 1403,– |
| Lid, galvanized | A | 276,– | 33,– | 309,– |
| Castor Set, polyamide, Load capacity 1350 kg / castor set | A | 192,– | 15,– | 207,– |
| Skip Body Welded Oil and Watertight | A | 121,– | 0,– | 121,– |
| **EXPO 1700, hot-dip galvanized** | A | 1435,– | 201,– | 1636,– |
| Lid, galvanized | A | 276,– | 33,– | 309,– |
| Castor Set, polyamide, Load capacity 1350 kg / castor set | A | 192,– | 15,– | 207,– |
| Skip Body Welded Oil and Watertight | A | 121,– | 0,– | 121,– |
| **EXPO 2100, painted** | A | 1325,– | 201,– | 1526,– |
| Lid, galvanized | A | 360,– | 36,– | 396,– |
| Castor Set, polyamide, Load capacity 1350 kg / castor set | A | 192,– | 15,– | 207,– |
| Skip Body Welded Oil and Watertight | A | 121,– | 0,– | 121,– |
| **EXPO 2100, hot-dip galvanized** | A | 1606,– | 201,– | 1807,– |
| Lid, galvanized | A | 360,– | 36,– | 396,– |
| Castor Set, polyamide, Load capacity 1350 kg / castor set | A | 192,– | 15,– | 207,– |
| Skip Body Welded Oil and Watertight | A | 121,– | 0,– | 121,– |

| Swarf Tilting Container Type EXPO®-E | Category | Price | Freight charges | Price including freight charges |
|---|---|---|---|---|
| **EXPO-E 150, painted** | A | 729,– | 106,– | 835,– |
| Lid, galvanized | A | 174,– | 18,– | 192,– |
| Castor Set, polyamide, Load capacity 1050 kg / castor set | A | 156,– | 15,– | 171,– |
| **EXPO-E 150, hot-dip galvanized** | A | 837,– | 106,– | 943,– |
| Lid, galvanized | A | 174,– | 18,– | 192,– |
| Castor Set, polyamide, Load capacity 1050 kg / castor set | A | 156,– | 15,– | 171,– |
| **EXPO-E 225, painted** | A | 782,– | 106,– | 888,– |
| Lid, galvanized | A | 174,– | 18,– | 192,– |
| Castor Set, polyamide, Load capacity 1050 kg / castor set | A | 156,– | 15,– | 171,– |
| **EXPO-E 225, hot-dip galvanized** | A | 907,– | 106,– | 1013,– |
| Lid, galvanized | A | 174,– | 18,– | 192,– |
| Castor Set, polyamide, Load capacity 1050 kg / castor set | A | 156,– | 15,– | 171,– |

Prices in EUR, valid EXW DE-46354 Südlohn, DE-38820 Halberstadt, unpacked
Freight charges valid CPT Denmark, islands and oversea territories excluded



BAUER GmbH
Eichendorffstr. 62
46354 Südlohn, Germany

Tel. +49 2862 70 90
info@bauer-suedlohn.com
www.bauer-suedlohn.com

Geschäftsführer
Patrick Bauer, Pascal Bauer
Amtsgericht Coesfeld HRB 5259

TÜVNORD
TÜV NORD CERT GmbH
DIN EN ISO 9001
tuev-nord.de

# Price List 0726 en-DK
# Forklift Truck Attachments

| Swarf Tilting Container Type EXPO®-E | Category | Price | Freight charges | Price including freight charges |
|---|---|---|---|---|
| **EXPO-E 275, painted** | A | 812,– | 106,– | 918,– |
| Lid, galvanized | A | 174,– | 18,– | 192,– |
| Castor Set, polyamide, Load capacity 1050 kg / castor set | A | 156,– | 15,– | 171,– |
| **EXPO-E 275, hot-dip galvanized** | A | 944,– | 106,– | 1050,– |
| Lid, galvanized | A | 174,– | 18,– | 192,– |
| Castor Set, polyamide, Load capacity 1050 kg / castor set | A | 156,– | 15,– | 171,– |
| **EXPO-E 300, painted** | A | 744,– | 143,– | 887,– |
| Lid, galvanized | A | 174,– | 18,– | 192,– |
| Castor Set, polyamide, Load capacity 1350 kg / castor set | A | 192,– | 15,– | 207,– |
| **EXPO-E 300, hot-dip galvanized** | A | 919,– | 143,– | 1062,– |
| Lid, galvanized | A | 174,– | 18,– | 192,– |
| Castor Set, polyamide, Load capacity 1350 kg / castor set | A | 192,– | 15,– | 207,– |
| **EXPO-E 600, painted** | A | 853,– | 143,– | 996,– |
| Lid, galvanized | A | 196,– | 22,– | 218,– |
| Castor Set, polyamide, Load capacity 1350 kg / castor set | A | 192,– | 15,– | 207,– |
| **EXPO-E 600, hot-dip galvanized** | A | 999,– | 143,– | 1142,– |
| Lid, galvanized | A | 196,– | 22,– | 218,– |
| Castor Set, polyamide, Load capacity 1350 kg / castor set | A | 192,– | 15,– | 207,– |
| **EXPO-E 900, painted** | A | 938,– | 143,– | 1081,– |
| Lid, galvanized | A | 223,– | 27,– | 250,– |
| Castor Set, polyamide, Load capacity 1350 kg / castor set | A | 192,– | 15,– | 207,– |
| **EXPO-E 900, hot-dip galvanized** | A | 1085,– | 143,– | 1228,– |
| Lid, galvanized | A | 223,– | 27,– | 250,– |
| Castor Set, polyamide, Load capacity 1350 kg / castor set | A | 192,– | 15,– | 207,– |
| **EXPO-E 1200, painted** | A | 1048,– | 201,– | 1249,– |
| Lid, galvanized | A | 223,– | 26,– | 249,– |
| Castor Set, polyamide, Load capacity 1350 kg / castor set | A | 192,– | 15,– | 207,– |
| **EXPO-E 1200, hot-dip galvanized** | A | 1204,– | 201,– | 1405,– |
| Lid, galvanized | A | 223,– | 26,– | 249,– |
| Castor Set, polyamide, Load capacity 1350 kg / castor set | A | 192,– | 15,– | 207,– |
| **EXPO-E 1700, painted** | A | 1365,– | 201,– | 1566,– |
| Lid, galvanized | A | 276,– | 33,– | 309,– |
| Castor Set, polyamide, Load capacity 1350 kg / castor set | A | 192,– | 15,– | 207,– |
| **EXPO-E 1700, hot-dip galvanized** | A | 1598,– | 201,– | 1799,– |
| Lid, galvanized | A | 276,– | 33,– | 309,– |
| Castor Set, polyamide, Load capacity 1350 kg / castor set | A | 192,– | 15,– | 207,– |
| **EXPO-E 2100, painted** | A | 1488,– | 201,– | 1689,– |
| Lid, galvanized | A | 360,– | 36,– | 396,– |
| Castor Set, polyamide, Load capacity 1350 kg / castor set | A | 192,– | 15,– | 207,– |
| **EXPO-E 2100, hot-dip galvanized** | A | 1768,– | 201,– | 1969,– |
| Lid, galvanized | A | 360,– | 36,– | 396,– |
| Castor Set, polyamide, Load capacity 1350 kg / castor set | A | 192,– | 15,– | 207,– |

| Container With Drop Away Base Type FB | Category | Price | Freight charges | Price including freight charges |
|---|---|---|---|---|
| **FB 500, painted** | A | 809,– | 143,– | 952,– |
| Lid, galvanized | A | 196,– | 15,– | 211,– |

Prices in EUR, valid EXW DE-46354 Südlohn, DE-38820 Halberstadt, unpacked
Freight charges valid CPT Denmark, islands and oversea territories excluded



BAUER GmbH
Eichendorffstr. 62
46354 Südlohn, Germany

Tel. +49 2862 70 90
info@bauer-suedlohn.com
www.bauer-suedlohn.com

Geschäftsführer
Patrick Bauer, Pascal Bauer
Amtsgericht Coesfeld HRB 5259

TÜVNORD
TÜV NORD CERT GmbH
DIN EN ISO 9001
tuev-nord.de

# Price List 0726 en-DK
# Forklift Truck Attachments

| Container With Drop Away Base Type FB | Category | Price | Freight charges | Price including freight charges |
|---|---|---|---|---|
| Castor Set, polyamide, Load capacity 1350 kg / castor set | A | 192,– | 15,– | 207,– |
| Guiding Plates, galvanized | A | 116,– | 12,– | 128,– |
| **FB 500, hot-dip galvanized** | A | 994,– | 143,– | 1137,– |
| Lid, galvanized | A | 196,– | 15,– | 211,– |
| Castor Set, polyamide, Load capacity 1350 kg / castor set | A | 192,– | 15,– | 207,– |
| Guiding Plates, galvanized | A | 116,– | 12,– | 128,– |
| **FB 750, painted** | A | 880,– | 143,– | 1023,– |
| Lid, galvanized | A | 196,– | 15,– | 211,– |
| Castor Set, polyamide, Load capacity 1350 kg / castor set | A | 192,– | 15,– | 207,– |
| Guiding Plates, galvanized | A | 116,– | 12,– | 128,– |
| **FB 750, hot-dip galvanized** | A | 1075,– | 143,– | 1218,– |
| Lid, galvanized | A | 196,– | 15,– | 211,– |
| Castor Set, polyamide, Load capacity 1350 kg / castor set | A | 192,– | 15,– | 207,– |
| Guiding Plates, galvanized | A | 116,– | 12,– | 128,– |
| **FB 1000, painted** | A | 942,– | 143,– | 1085,– |
| Lid, galvanized | A | 238,– | 18,– | 256,– |
| Castor Set, polyamide, Load capacity 1350 kg / castor set | A | 192,– | 15,– | 207,– |
| Guiding Plates, galvanized | A | 116,– | 12,– | 128,– |
| **FB 1000, hot-dip galvanized** | A | 1157,– | 143,– | 1300,– |
| Lid, galvanized | A | 238,– | 18,– | 256,– |
| Castor Set, polyamide, Load capacity 1350 kg / castor set | A | 192,– | 15,– | 207,– |
| Guiding Plates, galvanized | A | 116,– | 12,– | 128,– |
| **FB 1500, painted** | A | 1105,– | 201,– | 1306,– |
| Lid, galvanized | A | 351,– | 21,– | 372,– |
| Castor Set, polyamide, Load capacity 1350 kg / castor set | A | 192,– | 15,– | 207,– |
| Guiding Plates, galvanized | A | 116,– | 12,– | 128,– |
| **FB 1500, hot-dip galvanized** | A | 1392,– | 201,– | 1593,– |
| Lid, galvanized | A | 351,– | 21,– | 372,– |
| Castor Set, polyamide, Load capacity 1350 kg / castor set | A | 192,– | 15,– | 207,– |
| Guiding Plates, galvanized | A | 116,– | 12,– | 128,– |
| **FB 2000, painted** | A | 1192,– | 201,– | 1393,– |
| Lid, galvanized | A | 351,– | 21,– | 372,– |
| Castor Set, polyamide, Load capacity 1350 kg / castor set | A | 192,– | 15,– | 207,– |
| Guiding Plates, galvanized | A | 116,– | 12,– | 128,– |
| **FB 2000, hot-dip galvanized** | A | 1512,– | 201,– | 1713,– |
| Lid, galvanized | A | 351,– | 21,– | 372,– |
| Castor Set, polyamide, Load capacity 1350 kg / castor set | A | 192,– | 15,– | 207,– |
| Guiding Plates, galvanized | A | 116,– | 12,– | 128,– |

| Drum Tipper Type FD/L-HK | Category | Price | Freight charges | Price including freight charges |
|---|---|---|---|---|
| **FD/L-HK, painted** | B | 2324,– | 143,– | 2467,– |
| **FD/L-HK, hot-dip galvanized** | B | 2765,– | 143,– | 2908,– |

| Drum Tipper Type FD/L-K | Category | Price | Freight charges | Price including freight charges |
|---|---|---|---|---|
| **FD/L-K, painted** | B | 2515,– | 143,– | 2658,– |

Prices in EUR, valid EXW DE-46354 Südlohn, DE-38820 Halberstadt, unpacked
Freight charges valid CPT Denmark, islands and oversea territories excluded



BAUER GmbH
Eichendorffstr. 62
46354 Südlohn, Germany

Tel. +49 2862 70 90
info@bauer-suedlohn.com
www.bauer-suedlohn.com

Geschäftsführer
Patrick Bauer, Pascal Bauer
Amtsgericht Coesfeld HRB 5259

TÜVNORD
TÜV NORD CERT GmbH
DIN EN ISO 9001
tuev-nord.de

# Price List 0726 en-DK
# Forklift Truck Attachments

| Drum Tipper Type FD/L-K | Category | Price | Freight charges | Price including freight charges |
|---|---|---|---|---|
| FD/L-K, hot-dip galvanized | B | 2965,– | 143,– | 3108,– |

| Drum Tipper Type FD-H | Category | Price | Freight charges | Price including freight charges |
|---|---|---|---|---|
| FD-H, painted | B | 2593,– | 106,– | 2699,– |
| FD-H, hot-dip galvanized | B | 2828,– | 106,– | 2934,– |

| Drum Tipper Type FD-HK | Category | Price | Freight charges | Price including freight charges |
|---|---|---|---|---|
| FD-HK, painted | B | 1997,– | 106,– | 2103,– |
| FD-HK, hot-dip galvanized | B | 2237,– | 106,– | 2343,– |

| Drum Tipper Type FD-K | Category | Price | Freight charges | Price including freight charges |
|---|---|---|---|---|
| FD-K, painted | B | 2188,– | 106,– | 2294,– |
| FD-K, hot-dip galvanized | B | 2437,– | 106,– | 2543,– |

| Drum Tipper Type FD-SK | Category | Price | Freight charges | Price including freight charges |
|---|---|---|---|---|
| FD-SK, painted | B | 1997,– | 106,– | 2103,– |
| FD-SK, hot-dip galvanized | B | 2237,– | 106,– | 2343,– |

| Drum Jack Type FH | Category | Price | Freight charges | Price including freight charges |
|---|---|---|---|---|
| FH-I 120, painted | B | 1645,– | 106,– | 1751,– |
| FH-I 120, hot-dip galvanized | B | 1823,– | 106,– | 1929,– |
| FH-I 220, painted | B | 1645,– | 106,– | 1751,– |
| FH-I 220, hot-dip galvanized | B | 1852,– | 106,– | 1958,– |
| FH-II 120, painted | B | 2402,– | 106,– | 2508,– |
| FH-II 120, hot-dip galvanized | B | 2673,– | 106,– | 2779,– |
| FH-II 220, painted | B | 2402,– | 106,– | 2508,– |
| FH-II 220, hot-dip galvanized | B | 2729,– | 106,– | 2835,– |

| Drum Gripper Type FK | Category | Price | Freight charges | Price including freight charges |
|---|---|---|---|---|
| FK-I, painted | B | 1251,– | 106,– | 1357,– |
| FK-I, hot-dip galvanized | B | 1524,– | 106,– | 1630,– |
| FK-II, painted | B | 1488,– | 143,– | 1631,– |
| FK-II, hot-dip galvanized | B | 1882,– | 143,– | 2025,– |

| Drum Clamp Type FKL | Category | Price | Freight charges | Price including freight charges |
|---|---|---|---|---|
| FKL, painted | B | 480,– | 32,– | 512,– |

| Drum Tipper Type FLEX-HK | Category | Price | Freight charges | Price including freight charges |
|---|---|---|---|---|
| FLEX-HK, painted | B | 2164,– | 106,– | 2270,– |
| Shelf Drum Pallet RP, galvanized | B | 145,– | 32,– | 177,– |
| FLEX-HK, hot-dip galvanized | B | 2338,– | 106,– | 2444,– |
| Shelf Drum Pallet RP, galvanized | B | 145,– | 32,– | 177,– |

Prices in EUR, valid EXW DE-46354 Südlohn, DE-38820 Halberstadt, unpacked
Freight charges valid CPT Denmark, islands and oversea territories excluded



BAUER GmbH
Eichendorffstr. 62
46354 Südlohn, Germany

Tel. +49 2862 70 90
info@bauer-suedlohn.com
www.bauer-suedlohn.com

Geschäftsführer
Patrick Bauer, Pascal Bauer
Amtsgericht Coesfeld HRB 5259

TÜVNORD
TÜV NORD CERT GmbH
DIN EN ISO 9001
tuev-nord.de

# Price List 0726 en-DK
# Forklift Truck Attachments

| Drum Tipper Type FLEX-K | Category | Price | Freight charges | Price including freight charges |
|---|---|---|---|---|
| **FLEX-K, painted** | B | 2363,– | 106,– | 2469,– |
| Shelf Drum Pallet RP, galvanized | B | 145,– | 32,– | 177,– |
| **FLEX-K, hot-dip galvanized** | B | 2533,– | 106,– | 2639,– |
| Shelf Drum Pallet RP, galvanized | B | 145,– | 32,– | 177,– |

| Drum Traverse Type FT/M | Category | Price | Freight charges | Price including freight charges |
|---|---|---|---|---|
| **FT/M, galvanized** | B | 316,– | 32,– | 348,– |

| Drum Traverse Type FT/MK | Category | Price | Freight charges | Price including freight charges |
|---|---|---|---|---|
| **FT/MK, galvanized** | B | 362,– | 32,– | 394,– |

| Drum Turner Type FW | Category | Price | Freight charges | Price including freight charges |
|---|---|---|---|---|
| **FW-I, painted** | B | 1389,– | 143,– | 1532,– |
| **FW-I, hot-dip galvanized** | B | 1803,– | 143,– | 1946,– |
| **FW-II, painted** | B | 1945,– | 143,– | 2088,– |
| **FW-II, hot-dip galvanized** | B | 2533,– | 143,– | 2676,– |

| Drum Turning Claw Type FWZ | Category | Price | Freight charges | Price including freight charges |
|---|---|---|---|---|
| **FWZ-60, painted** | B | 1355,– | 106,– | 1461,– |
| **FWZ-60, galvanized** | B | 1335,– | 106,– | 1441,– |
| **FWZ-200, painted** | B | 1397,– | 106,– | 1503,– |
| **FWZ-200, galvanized** | B | 1376,– | 106,– | 1482,– |

| Fork Extensions Type GG | Category | Price | Freight charges | Price including freight charges |
|---|---|---|---|---|
| **GG 80/40 (1600 mm long), painted** | A | 541,– | 106,– | 647,– |
| **GG 80/40 (1800 mm long), painted** | A | 570,– | 106,– | 676,– |
| **GG 80/40 (2000 mm long), painted** | A | 601,– | 106,– | 707,– |
| **GG 100/40 (1600 mm long), painted** | A | 541,– | 106,– | 647,– |
| **GG 100/40 (1800 mm long), painted** | A | 570,– | 106,– | 676,– |
| **GG 100/40 (2000 mm long), painted** | A | 601,– | 106,– | 707,– |
| **GG 100/45 (1600 mm long), painted** | A | 541,– | 106,– | 647,– |
| **GG 100/45 (1800 mm long), painted** | A | 570,– | 106,– | 676,– |
| **GG 100/45 (2000 mm long), painted** | A | 601,– | 106,– | 707,– |
| **GG 100/50 (1600 mm long), painted** | A | 541,– | 106,– | 647,– |
| **GG 100/50 (1800 mm long), painted** | A | 570,– | 106,– | 676,– |
| **GG 100/50 (2000 mm long), painted** | A | 601,– | 143,– | 744,– |
| **GG 120/40 (1600 mm long), painted** | A | 570,– | 106,– | 676,– |
| **GG 120/40 (1800 mm long), painted** | A | 601,– | 143,– | 744,– |
| **GG 120/40 (2000 mm long), painted** | A | 645,– | 143,– | 788,– |
| **GG 120/50 (1600 mm long), painted** | A | 570,– | 106,– | 676,– |
| **GG 120/50 (1800 mm long), painted** | A | 601,– | 143,– | 744,– |
| **GG 120/50 (2000 mm long), painted** | A | 645,– | 143,– | 788,– |
| **GG 125/45 (1600 mm long), painted** | A | 570,– | 106,– | 676,– |
| **GG 125/45 (1800 mm long), painted** | A | 601,– | 143,– | 744,– |
| **GG 125/45 (2000 mm long), painted** | A | 645,– | 143,– | 788,– |

Prices in EUR, valid EXW DE-46354 Südlohn, DE-38820 Halberstadt, unpacked
Freight charges valid CPT Denmark, islands and oversea territories excluded



BAUER GmbH
Eichendorffstr. 62
46354 Südlohn, Germany

Tel. +49 2862 70 90
info@bauer-suedlohn.com
www.bauer-suedlohn.com

Geschäftsführer
Patrick Bauer, Pascal Bauer
Amtsgericht Coesfeld HRB 5259

TÜVNORD
TÜV NORD CERT GmbH
DIN EN ISO 9001
tuev-nord.de

# Price List 0726 en-DK
# Forklift Truck Attachments

| Fork Extensions Type GG | Category | Price | Freight charges | Price including freight charges |
|---|---|---|---|---|
| GG 125/50 (1600 mm long), painted | A | 570,– | 106,– | 676,– |
| GG 125/50 (1800 mm long), painted | A | 601,– | 143,– | 744,– |
| GG 125/50 (2000 mm long), painted | A | 645,– | 143,– | 788,– |
| GG 150/50 (1600 mm long), painted | A | 634,– | 143,– | 777,– |
| GG 150/50 (1800 mm long), painted | A | 680,– | 143,– | 823,– |
| GG 150/50 (2000 mm long), painted | A | 713,– | 143,– | 856,– |
| GG 150/70 (1600 mm long), painted | A | 634,– | 143,– | 777,– |
| GG 150/70 (1800 mm long), painted | A | 680,– | 143,– | 823,– |
| GG 150/70 (2000 mm long), painted | A | 713,– | 143,– | 856,– |

| Fork Extensions Type GO | Category | Price | Freight charges | Price including freight charges |
|---|---|---|---|---|
| GO 80/40 (1600 mm long), painted | A | 390,– | 106,– | 496,– |
| GO 80/40 (1800 mm long), painted | A | 396,– | 106,– | 502,– |
| GO 80/40 (2000 mm long), painted | A | 411,– | 106,– | 517,– |
| GO 100/40 (1600 mm long), painted | A | 390,– | 106,– | 496,– |
| GO 100/40 (1800 mm long), painted | A | 396,– | 106,– | 502,– |
| GO 100/40 (2000 mm long), painted | A | 411,– | 106,– | 517,– |
| GO 100/45 (1600 mm long), painted | A | 390,– | 106,– | 496,– |
| GO 100/45 (1800 mm long), painted | A | 396,– | 106,– | 502,– |
| GO 100/45 (2000 mm long), painted | A | 411,– | 106,– | 517,– |
| GO 100/50 (1600 mm long), painted | A | 390,– | 106,– | 496,– |
| GO 100/50 (1800 mm long), painted | A | 396,– | 106,– | 502,– |
| GO 100/50 (2000 mm long), painted | A | 411,– | 106,– | 517,– |
| GO 120/40 (1600 mm long), painted | A | 396,– | 106,– | 502,– |
| GO 120/40 (1800 mm long), painted | A | 418,– | 106,– | 524,– |
| GO 120/40 (2000 mm long), painted | A | 435,– | 106,– | 541,– |
| GO 120/50 (1600 mm long), painted | A | 396,– | 106,– | 502,– |
| GO 120/50 (1800 mm long), painted | A | 418,– | 106,– | 524,– |
| GO 120/50 (2000 mm long), painted | A | 435,– | 106,– | 541,– |
| GO 125/45 (1600 mm long), painted | A | 396,– | 106,– | 502,– |
| GO 125/45 (1800 mm long), painted | A | 418,– | 106,– | 524,– |
| GO 125/45 (2000 mm long), painted | A | 435,– | 106,– | 541,– |
| GO 125/50 (1600 mm long), painted | A | 396,– | 106,– | 502,– |
| GO 125/50 (1800 mm long), painted | A | 418,– | 106,– | 524,– |
| GO 125/50 (2000 mm long), painted | A | 435,– | 106,– | 541,– |
| GO 150/50 (1600 mm long), painted | A | 475,– | 106,– | 581,– |
| GO 150/50 (1800 mm long), painted | A | 516,– | 106,– | 622,– |
| GO 150/50 (2000 mm long), painted | A | 555,– | 106,– | 661,– |
| GO 150/70 (1600 mm long), painted | A | 475,– | 106,– | 581,– |
| GO 150/70 (1800 mm long), painted | A | 516,– | 106,– | 622,– |
| GO 150/70 (2000 mm long), painted | A | 555,– | 106,– | 661,– |

| Tilting Container Type GU | Category | Price | Freight charges | Price including freight charges |
|---|---|---|---|---|
| GU 300, painted | A | 655,– | 143,– | 798,– |
| Lid, galvanized | A | 98,– | 18,– | 116,– |

Prices in EUR, valid EXW DE-46354 Südlohn, DE-38820 Halberstadt, unpacked
Freight charges valid CPT Denmark, islands and oversea territories excluded



BAUER GmbH
Eichendorffstr. 62
46354 Südlohn, Germany

Tel. +49 2862 70 90
info@bauer-suedlohn.com
www.bauer-suedlohn.com

Geschäftsführer
Patrick Bauer, Pascal Bauer
Amtsgericht Coesfeld HRB 5259

TÜVNORD
TÜV NORD CERT GmbH
DIN EN ISO 9001
tuev-nord.de

# Price List 0726 en-DK
# Forklift Truck Attachments

| Tilting Container Type GU | Category | Price | Freight charges | Price including freight charges |
|---|---|---|---|---|
| Castor Set, polyamide, Load capacity 1350 kg / castor set | A | 192,– | 15,– | 207,– |
| Skip Body Welded Oil and Watertight | A | 78,– | 0,– | 78,– |
| Crane lifting eyes for use with a crane | A | 106,– | 8,– | 114,– |
| Support legs, 100 mm ground leeway | A | 70,– | 8,– | 78,– |
| **GU 300, hot-dip galvanized** | A | 866,– | 143,– | 1009,– |
| Lid, galvanized | A | 98,– | 18,– | 116,– |
| Castor Set, polyamide, Load capacity 1350 kg / castor set | A | 192,– | 15,– | 207,– |
| Skip Body Welded Oil and Watertight | A | 78,– | 0,– | 78,– |
| Crane lifting eyes for use with a crane | A | 106,– | 8,– | 114,– |
| Support legs, 100 mm ground leeway | A | 70,– | 8,– | 78,– |
| **GU 500, painted** | A | 891,– | 143,– | 1034,– |
| Lid, galvanized | A | 98,– | 18,– | 116,– |
| Castor Set, polyamide, Load capacity 1350 kg / castor set | A | 192,– | 15,– | 207,– |
| Skip Body Welded Oil and Watertight | A | 78,– | 0,– | 78,– |
| Adjustable dumping brake | A | 464,– | 10,– | 474,– |
| Crane lifting eyes for use with a crane | A | 106,– | 8,– | 114,– |
| Support legs, 100 mm ground leeway | A | 70,– | 8,– | 78,– |
| **GU 500, hot-dip galvanized** | A | 1160,– | 143,– | 1303,– |
| Lid, galvanized | A | 98,– | 18,– | 116,– |
| Castor Set, polyamide, Load capacity 1350 kg / castor set | A | 192,– | 15,– | 207,– |
| Skip Body Welded Oil and Watertight | A | 78,– | 0,– | 78,– |
| Adjustable dumping brake | A | 464,– | 10,– | 474,– |
| Crane lifting eyes for use with a crane | A | 106,– | 8,– | 114,– |
| Support legs, 100 mm ground leeway | A | 70,– | 8,– | 78,– |
| **GU 750, painted** | A | 1052,– | 143,– | 1195,– |
| Lid, galvanized | A | 139,– | 26,– | 165,– |
| Castor Set, polyamide, Load capacity 1350 kg / castor set | A | 192,– | 15,– | 207,– |
| Skip Body Welded Oil and Watertight | A | 78,– | 0,– | 78,– |
| Adjustable dumping brake | A | 464,– | 10,– | 474,– |
| Crane lifting eyes for use with a crane | A | 106,– | 8,– | 114,– |
| Support legs, 100 mm ground leeway | A | 70,– | 8,– | 78,– |
| **GU 750, hot-dip galvanized** | A | 1371,– | 143,– | 1514,– |
| Lid, galvanized | A | 139,– | 26,– | 165,– |
| Castor Set, polyamide, Load capacity 1350 kg / castor set | A | 192,– | 15,– | 207,– |
| Skip Body Welded Oil and Watertight | A | 78,– | 0,– | 78,– |
| Adjustable dumping brake | A | 464,– | 10,– | 474,– |
| Crane lifting eyes for use with a crane | A | 106,– | 8,– | 114,– |
| Support legs, 100 mm ground leeway | A | 70,– | 8,– | 78,– |
| **GU 1000, painted** | A | 1163,– | 143,– | 1306,– |
| Lid, galvanized | A | 192,– | 27,– | 219,– |
| Castor Set, polyamide, Load capacity 1350 kg / castor set | A | 192,– | 15,– | 207,– |
| Skip Body Welded Oil and Watertight | A | 121,– | 0,– | 121,– |
| Adjustable dumping brake | A | 464,– | 10,– | 474,– |
| Crane lifting eyes for use with a crane | A | 106,– | 8,– | 114,– |
| Support legs, 100 mm ground leeway | A | 70,– | 8,– | 78,– |
| **GU 1000, hot-dip galvanized** | A | 1647,– | 201,– | 1848,– |

Prices in EUR, valid EXW DE-46354 Südlohn, DE-38820 Halberstadt, unpacked
Freight charges valid CPT Denmark, islands and oversea territories excluded



BAUER GmbH
Eichendorffstr. 62
46354 Südlohn, Germany

Tel. +49 2862 70 90
info@bauer-suedlohn.com
www.bauer-suedlohn.com

Geschäftsführer
Patrick Bauer, Pascal Bauer
Amtsgericht Coesfeld HRB 5259

TÜVNORD
TÜV NORD CERT GmbH
DIN EN ISO 9001
tuev-nord.de

# Price List 0726 en-DK
# Forklift Truck Attachments

| Tilting Container Type GU | Category | Price | Freight charges | Price including freight charges |
|---|---|---|---|---|
| Lid, galvanized | A | 192,– | 27,– | 219,– |
| Castor Set, polyamide, Load capacity 1350 kg / castor set | A | 192,– | 15,– | 207,– |
| Skip Body Welded Oil and Watertight | A | 121,– | 0,– | 121,– |
| Adjustable dumping brake | A | 464,– | 10,– | 474,– |
| Crane lifting eyes for use with a crane | A | 106,– | 8,– | 114,– |
| Support legs, 100 mm ground leeway | A | 70,– | 8,– | 78,– |
| **GU 1500, painted** | A | 1357,– | 201,– | 1558,– |
| Lid, galvanized | A | 192,– | 27,– | 219,– |
| Castor Set, polyamide, Load capacity 1350 kg / castor set | A | 192,– | 15,– | 207,– |
| Skip Body Welded Oil and Watertight | A | 121,– | 0,– | 121,– |
| Adjustable dumping brake | A | 464,– | 10,– | 474,– |
| Crane lifting eyes for use with a crane | A | 106,– | 8,– | 114,– |
| Support legs, 100 mm ground leeway | A | 70,– | 8,– | 78,– |
| **GU 1500, hot-dip galvanized** | A | 1769,– | 201,– | 1970,– |
| Lid, galvanized | A | 192,– | 27,– | 219,– |
| Castor Set, polyamide, Load capacity 1350 kg / castor set | A | 192,– | 15,– | 207,– |
| Skip Body Welded Oil and Watertight | A | 121,– | 0,– | 121,– |
| Adjustable dumping brake | A | 464,– | 10,– | 474,– |
| Crane lifting eyes for use with a crane | A | 106,– | 8,– | 114,– |
| Support legs, 100 mm ground leeway | A | 70,– | 8,– | 78,– |
| **GU 2000, painted** | A | 1675,– | 201,– | 1876,– |
| Lid, galvanized | A | 226,– | 32,– | 258,– |
| Castor Set, polyamide, Load capacity 1350 kg / castor set | A | 192,– | 15,– | 207,– |
| Skip Body Welded Oil and Watertight | A | 121,– | 0,– | 121,– |
| Adjustable dumping brake | A | 464,– | 10,– | 474,– |
| Crane lifting eyes for use with a crane | A | 106,– | 8,– | 114,– |
| Support legs, 100 mm ground leeway | A | 70,– | 8,– | 78,– |
| **GU 2000, hot-dip galvanized** | A | 2200,– | 201,– | 2401,– |
| Lid, galvanized | A | 226,– | 32,– | 258,– |
| Castor Set, polyamide, Load capacity 1350 kg / castor set | A | 192,– | 15,– | 207,– |
| Skip Body Welded Oil and Watertight | A | 121,– | 0,– | 121,– |
| Adjustable dumping brake | A | 464,– | 10,– | 474,– |
| Crane lifting eyes for use with a crane | A | 106,– | 8,– | 114,– |
| Support legs, 100 mm ground leeway | A | 70,– | 8,– | 78,– |

| Swarf Tilting Container Type GU-E | Category | Price | Freight charges | Price including freight charges |
|---|---|---|---|---|
| **GU-E 300, painted** | A | 775,– | 143,– | 918,– |
| Lid, galvanized | A | 98,– | 18,– | 116,– |
| Castor Set, polyamide, Load capacity 1350 kg / castor set | A | 192,– | 15,– | 207,– |
| Crane lifting eyes for use with a crane | A | 106,– | 8,– | 114,– |
| Support legs, 100 mm ground leeway | A | 70,– | 8,– | 78,– |
| **GU-E 300, hot-dip galvanized** | A | 986,– | 143,– | 1129,– |
| Lid, galvanized | A | 98,– | 18,– | 116,– |
| Castor Set, polyamide, Load capacity 1350 kg / castor set | A | 192,– | 15,– | 207,– |
| Crane lifting eyes for use with a crane | A | 106,– | 8,– | 114,– |
| Support legs, 100 mm ground leeway | A | 70,– | 8,– | 78,– |

Prices in EUR, valid EXW DE-46354 Südlohn, DE-38820 Halberstadt, unpacked
Freight charges valid CPT Denmark, islands and oversea territories excluded



BAUER GmbH
Eichendorffstr. 62
46354 Südlohn, Germany

Tel. +49 2862 70 90
info@bauer-suedlohn.com
www.bauer-suedlohn.com

Geschäftsführer
Patrick Bauer, Pascal Bauer
Amtsgericht Coesfeld HRB 5259

TÜVNORD
TÜV NORD CERT GmbH
DIN EN ISO 9001
tuev-nord.de

# Price List 0726 en-DK
# Forklift Truck Attachments

| Swarf Tilting Container Type GU-E | Category | Price | Freight charges | Price including freight charges |
|---|---|---|---|---|
| **GU-E 500, painted** | A | 1012,– | 143,– | 1155,– |
| Lid, galvanized | A | 98,– | 18,– | 116,– |
| Castor Set, polyamide, Load capacity 1350 kg / castor set | A | 192,– | 15,– | 207,– |
| Adjustable dumping brake | A | 464,– | 10,– | 474,– |
| Crane lifting eyes for use with a crane | A | 106,– | 8,– | 114,– |
| Support legs, 100 mm ground leeway | A | 70,– | 8,– | 78,– |
| **GU-E 500, hot-dip galvanized** | A | 1280,– | 143,– | 1423,– |
| Lid, galvanized | A | 98,– | 18,– | 116,– |
| Castor Set, polyamide, Load capacity 1350 kg / castor set | A | 192,– | 15,– | 207,– |
| Adjustable dumping brake | A | 464,– | 10,– | 474,– |
| Crane lifting eyes for use with a crane | A | 106,– | 8,– | 114,– |
| Support legs, 100 mm ground leeway | A | 70,– | 8,– | 78,– |
| **GU-E 750, painted** | A | 1172,– | 143,– | 1315,– |
| Lid, galvanized | A | 139,– | 26,– | 165,– |
| Castor Set, polyamide, Load capacity 1350 kg / castor set | A | 192,– | 15,– | 207,– |
| Adjustable dumping brake | A | 464,– | 10,– | 474,– |
| Crane lifting eyes for use with a crane | A | 106,– | 8,– | 114,– |
| Support legs, 100 mm ground leeway | A | 70,– | 8,– | 78,– |
| **GU-E 750, hot-dip galvanized** | A | 1491,– | 143,– | 1634,– |
| Lid, galvanized | A | 139,– | 26,– | 165,– |
| Castor Set, polyamide, Load capacity 1350 kg / castor set | A | 192,– | 15,– | 207,– |
| Adjustable dumping brake | A | 464,– | 10,– | 474,– |
| Crane lifting eyes for use with a crane | A | 106,– | 8,– | 114,– |
| Support legs, 100 mm ground leeway | A | 70,– | 8,– | 78,– |
| **GU-E 1000, painted** | A | 1325,– | 143,– | 1468,– |
| Lid, galvanized | A | 192,– | 27,– | 219,– |
| Castor Set, polyamide, Load capacity 1350 kg / castor set | A | 192,– | 15,– | 207,– |
| Adjustable dumping brake | A | 464,– | 10,– | 474,– |
| Crane lifting eyes for use with a crane | A | 106,– | 8,– | 114,– |
| Support legs, 100 mm ground leeway | A | 70,– | 8,– | 78,– |
| **GU-E 1000, hot-dip galvanized** | A | 1810,– | 201,– | 2011,– |
| Lid, galvanized | A | 192,– | 27,– | 219,– |
| Castor Set, polyamide, Load capacity 1350 kg / castor set | A | 192,– | 15,– | 207,– |
| Adjustable dumping brake | A | 464,– | 10,– | 474,– |
| Crane lifting eyes for use with a crane | A | 106,– | 8,– | 114,– |
| Support legs, 100 mm ground leeway | A | 70,– | 8,– | 78,– |
| **GU-E 1500, painted** | A | 1520,– | 201,– | 1721,– |
| Lid, galvanized | A | 192,– | 27,– | 219,– |
| Castor Set, polyamide, Load capacity 1350 kg / castor set | A | 192,– | 15,– | 207,– |
| Adjustable dumping brake | A | 464,– | 10,– | 474,– |
| Crane lifting eyes for use with a crane | A | 106,– | 8,– | 114,– |
| Support legs, 100 mm ground leeway | A | 70,– | 8,– | 78,– |
| **GU-E 1500, hot-dip galvanized** | A | 1932,– | 201,– | 2133,– |
| Lid, galvanized | A | 192,– | 27,– | 219,– |
| Castor Set, polyamide, Load capacity 1350 kg / castor set | A | 192,– | 15,– | 207,– |
| Adjustable dumping brake | A | 464,– | 10,– | 474,– |

Prices in EUR, valid EXW DE-46354 Südlohn, DE-38820 Halberstadt, unpacked
Freight charges valid CPT Denmark, islands and oversea territories excluded



BAUER GmbH
Eichendorffstr. 62
46354 Südlohn, Germany

Tel. +49 2862 70 90
info@bauer-suedlohn.com
www.bauer-suedlohn.com

Geschäftsführer
Patrick Bauer, Pascal Bauer
Amtsgericht Coesfeld HRB 5259

TÜVNORD
TÜV NORD CERT GmbH
DIN EN ISO 9001
tuev-nord.de

# Price List 0726 en-DK
# Forklift Truck Attachments

| Swarf Tilting Container Type GU-E | Category | Price | Freight charges | Price including freight charges |
|---|---|---|---|---|
| Crane lifting eyes for use with a crane | A | 106,– | 8,– | 114,– |
| Support legs, 100 mm ground leeway | A | 70,– | 8,– | 78,– |
| **GU-E 2000, painted** | A | 1838,– | 201,– | 2039,– |
| Lid, galvanized | A | 226,– | 32,– | 258,– |
| Castor Set, polyamide, Load capacity 1350 kg / castor set | A | 192,– | 15,– | 207,– |
| Adjustable dumping brake | A | 464,– | 10,– | 474,– |
| Crane lifting eyes for use with a crane | A | 106,– | 8,– | 114,– |
| Support legs, 100 mm ground leeway | A | 70,– | 8,– | 78,– |
| **GU-E 2000, hot-dip galvanized** | A | 2362,– | 201,– | 2563,– |
| Lid, galvanized | A | 226,– | 32,– | 258,– |
| Castor Set, polyamide, Load capacity 1350 kg / castor set | A | 192,– | 15,– | 207,– |
| Adjustable dumping brake | A | 464,– | 10,– | 474,– |
| Crane lifting eyes for use with a crane | A | 106,– | 8,– | 114,– |
| Support legs, 100 mm ground leeway | A | 70,– | 8,– | 78,– |

| Tilting Container Type GU-RZ | Category | Price | Freight charges | Price including freight charges |
|---|---|---|---|---|
| **GU-RZ 30, painted** | A | 699,– | 143,– | 842,– |
| Lid, galvanized | A | 95,– | 18,– | 113,– |
| **GU-RZ 30, hot-dip galvanized** | A | 779,– | 143,– | 922,– |
| Lid, galvanized | A | 95,– | 18,– | 113,– |
| **GU-RZ 55, painted** | A | 931,– | 143,– | 1074,– |
| Lid, galvanized | A | 95,– | 18,– | 113,– |
| **GU-RZ 55, hot-dip galvanized** | A | 1026,– | 143,– | 1169,– |
| Lid, galvanized | A | 95,– | 18,– | 113,– |

| Fork Protection Type GZS | Category | Price | Freight charges | Price including freight charges |
|---|---|---|---|---|
| **GZS, painted** | F | 179,– | 32,– | 211,– |

| Container With Drop Away Base Type HKB | Category | Price | Freight charges | Price including freight charges |
|---|---|---|---|---|
| **HKB 60, painted** | A | 1078,– | 143,– | 1221,– |
| **HKB 70, painted** | A | 1140,– | 143,– | 1283,– |
| **HKB 90, painted** | A | 1417,– | 143,– | 1560,– |

| Shovel Type HVR | Category | Price | Freight charges | Price including freight charges |
|---|---|---|---|---|
| **HVR 50, painted** | A | 3393,– | 201,– | 3594,– |
| **HVR 75, painted** | A | 3976,– | 256,– | 4232,– |
| **HVR 80 L, painted** | A | 4095,– | 256,– | 4351,– |
| **HVR 100, painted** | A | 5033,– | 335,– | 5368,– |
| **HVR 150, painted** | A | 6432,– | 335,– | 6767,– |

| Kippomat Type KG-A | Category | Price | Freight charges | Price including freight charges |
|---|---|---|---|---|
| **KG-A, hot-dip galvanized** | A | 3218,– | 201,– | 3419,– |

| Kippomat Type KG-B | Category | Price | Freight charges | Price including freight charges |
|---|---|---|---|---|
| **KG-B, hot-dip galvanized** | A | 3137,– | 201,– | 3338,– |

Prices in EUR, valid EXW DE-46354 Südlohn, DE-38820 Halberstadt, unpacked
Freight charges valid CPT Denmark, islands and oversea territories excluded



BAUER GmbH
Eichendorffstr. 62
46354 Südlohn, Germany

Tel. +49 2862 70 90
info@bauer-suedlohn.com
www.bauer-suedlohn.com

Geschäftsführer
Patrick Bauer, Pascal Bauer
Amtsgericht Coesfeld HRB 5259

TÜVNORD
TÜV NORD CERT GmbH
DIN EN ISO 9001
tuev-nord.de

# Price List 0726 en-DK
# Forklift Truck Attachments

| Kippomat Type KG-C | Category | Price | Freight charges | Price including freight charges |
|---|---|---|---|---|
| **KG-C, hot-dip galvanized** | A | 2081,– | 143,– | 2224,– |

| Tipping Skip Type KK | Category | Price | Freight charges | Price including freight charges |
|---|---|---|---|---|
| **KK 250, painted** | E | 484,– | 106,– | 590,– |
| Lid, galvanized | E | 136,– | 15,– | 151,– |
| Castor Set, polyamide, Load capacity 1050 kg / castor set | A | 136,– | 15,– | 151,– |
| Castor Set, solid rubber, Load capacity 615 kg / castor set | E | 103,– | 15,– | 118,– |
| **KK 250, hot-dip galvanized** | E | 534,– | 106,– | 640,– |
| Lid, galvanized | E | 136,– | 15,– | 151,– |
| Castor Set, polyamide, Load capacity 1050 kg / castor set | A | 136,– | 15,– | 151,– |
| Castor Set, solid rubber, Load capacity 615 kg / castor set | E | 103,– | 15,– | 118,– |
| **KK 400, painted** | E | 551,– | 106,– | 657,– |
| Lid, galvanized | E | 156,– | 16,– | 172,– |
| Castor Set, polyamide, Load capacity 1050 kg / castor set | A | 136,– | 15,– | 151,– |
| Castor Set, solid rubber, Load capacity 615 kg / castor set | E | 103,– | 15,– | 118,– |
| **KK 400, hot-dip galvanized** | E | 600,– | 106,– | 706,– |
| Lid, galvanized | E | 156,– | 16,– | 172,– |
| Castor Set, polyamide, Load capacity 1050 kg / castor set | A | 136,– | 15,– | 151,– |
| Castor Set, solid rubber, Load capacity 615 kg / castor set | E | 103,– | 15,– | 118,– |
| **KK 600, painted** | E | 764,– | 143,– | 907,– |
| Lid, galvanized | E | 173,– | 20,– | 193,– |
| Castor Set, polyamide, Load capacity 1050 kg / castor set | A | 136,– | 15,– | 151,– |
| Castor Set, solid rubber, Load capacity 615 kg / castor set | E | 103,– | 15,– | 118,– |
| **KK 600, hot-dip galvanized** | E | 865,– | 143,– | 1008,– |
| Castor Set, solid rubber, Load capacity 615 kg / castor set | E | 103,– | 15,– | 118,– |
| Lid, galvanized | E | 173,– | 20,– | 193,– |
| Castor Set, polyamide, Load capacity 1050 kg / castor set | A | 136,– | 15,– | 151,– |
| **KK 800, painted** | E | 823,– | 143,– | 966,– |
| Lid, galvanized | E | 181,– | 21,– | 202,– |
| Castor Set, polyamide, Load capacity 1050 kg / castor set | A | 136,– | 15,– | 151,– |
| Castor Set, solid rubber, Load capacity 615 kg / castor set | E | 103,– | 15,– | 118,– |
| **KK 800, hot-dip galvanized** | E | 930,– | 143,– | 1073,– |
| Lid, galvanized | E | 181,– | 21,– | 202,– |
| Castor Set, polyamide, Load capacity 1050 kg / castor set | A | 136,– | 15,– | 151,– |
| Castor Set, solid rubber, Load capacity 615 kg / castor set | E | 103,– | 15,– | 118,– |
| **KK 1000, painted** | E | 881,– | 143,– | 1024,– |
| Lid, galvanized | E | 193,– | 22,– | 215,– |
| Castor Set, polyamide, Load capacity 1050 kg / castor set | A | 136,– | 15,– | 151,– |
| Castor Set, solid rubber, Load capacity 615 kg / castor set | E | 103,– | 15,– | 118,– |
| **KK 1000, hot-dip galvanized** | E | 1014,– | 143,– | 1157,– |
| Lid, galvanized | E | 193,– | 22,– | 215,– |
| Castor Set, polyamide, Load capacity 1050 kg / castor set | A | 136,– | 15,– | 151,– |
| Castor Set, solid rubber, Load capacity 615 kg / castor set | E | 103,– | 15,– | 118,– |

Prices in EUR, valid EXW DE-46354 Südlohn, DE-38820 Halberstadt, unpacked
Freight charges valid CPT Denmark, islands and oversea territories excluded



BAUER GmbH
Eichendorffstr. 62
46354 Südlohn, Germany

Tel. +49 2862 70 90
info@bauer-suedlohn.com
www.bauer-suedlohn.com

Geschäftsführer
Patrick Bauer, Pascal Bauer
Amtsgericht Coesfeld HRB 5259

TÜVNORD
TÜV NORD CERT GmbH
DIN EN ISO 9001
tuev-nord.de

# Price List 0726 en-DK
# Forklift Truck Attachments

| Kippomat Type KM | Category | Price | Freight charges | Price including freight charges |
|---|---|---|---|---|
| **KM, hot-dip galvanized** | A | 3218,– | 143,– | 3361,– |

| Tipping Skip Type KN | Category | Price | Freight charges | Price including freight charges |
|---|---|---|---|---|
| **KN 250, painted** | E | 484,– | 106,– | 590,– |
| Lid, galvanized | E | 136,– | 15,– | 151,– |
| Castor Set, polyamide, Load capacity 1050 kg / castor set | A | 136,– | 15,– | 151,– |
| Castor Set, solid rubber, Load capacity 615 kg / castor set | E | 103,– | 15,– | 118,– |
| **KN 250, hot-dip galvanized** | E | 534,– | 106,– | 640,– |
| Lid, galvanized | E | 136,– | 15,– | 151,– |
| Castor Set, polyamide, Load capacity 1050 kg / castor set | A | 136,– | 15,– | 151,– |
| Castor Set, solid rubber, Load capacity 615 kg / castor set | E | 103,– | 15,– | 118,– |
| **KN 400, painted** | E | 551,– | 106,– | 657,– |
| Lid, galvanized | E | 156,– | 16,– | 172,– |
| Castor Set, polyamide, Load capacity 1050 kg / castor set | A | 136,– | 15,– | 151,– |
| Castor Set, solid rubber, Load capacity 615 kg / castor set | E | 103,– | 15,– | 118,– |
| **KN 400, hot-dip galvanized** | E | 600,– | 106,– | 706,– |
| Lid, galvanized | E | 156,– | 16,– | 172,– |
| Castor Set, polyamide, Load capacity 1050 kg / castor set | A | 136,– | 15,– | 151,– |
| Castor Set, solid rubber, Load capacity 615 kg / castor set | E | 103,– | 15,– | 118,– |

| Tipping Skip Type KS | Category | Price | Freight charges | Price including freight charges |
|---|---|---|---|---|
| **KS 400, painted** | E | 900,– | 143,– | 1043,– |
| **KS 550, painted** | E | 964,– | 143,– | 1107,– |
| **KS 700, painted** | E | 1024,– | 143,– | 1167,– |

| Extensible Crane Arm Type KT | Category | Price | Freight charges | Price including freight charges |
|---|---|---|---|---|
| **KT 2,5, painted** | A | 1448,– | 143,– | 1591,– |
| **KT 2,5, hot-dip galvanized** | A | 1763,– | 201,– | 1964,– |
| **KT 5,0, painted** | A | 1798,– | 201,– | 1999,– |
| **KT 5,0, hot-dip galvanized** | A | 2242,– | 201,– | 2443,– |

| Extensible Crane Arm Type KTH | Category | Price | Freight charges | Price including freight charges |
|---|---|---|---|---|
| **KTH 2,5, painted** | A | 1748,– | 201,– | 1949,– |
| **KTH 2,5, hot-dip galvanized** | A | 2068,– | 201,– | 2269,– |
| **KTH 5,0, painted** | A | 2012,– | 201,– | 2213,– |
| **KTH 5,0, hot-dip galvanized** | A | 2373,– | 201,– | 2574,– |

| Extensible Crane Arm Type KTH-K | Category | Price | Freight charges | Price including freight charges |
|---|---|---|---|---|
| **KTH-K 2,5, painted** | A | 1606,– | 143,– | 1749,– |
| **KTH-K 2,5, hot-dip galvanized** | A | 1943,– | 143,– | 2086,– |
| **KTH-K 5,0, painted** | A | 1852,– | 143,– | 1995,– |
| **KTH-K 5,0, hot-dip galvanized** | A | 2232,– | 201,– | 2433,– |

| Extensible Crane Arm Type KT-K | Category | Price | Freight charges | Price including freight charges |
|---|---|---|---|---|
| **KT-K 2,5, painted** | A | 1291,– | 143,– | 1434,– |

Prices in EUR, valid EXW DE-46354 Südlohn, DE-38820 Halberstadt, unpacked
Freight charges valid CPT Denmark, islands and oversea territories excluded



BAUER GmbH
Eichendorffstr. 62
46354 Südlohn, Germany

Tel. +49 2862 70 90
info@bauer-suedlohn.com
www.bauer-suedlohn.com

Geschäftsführer
Patrick Bauer, Pascal Bauer
Amtsgericht Coesfeld HRB 5259

TÜVNORD
TÜV NORD CERT GmbH
DIN EN ISO 9001
tuev-nord.de

# Price List 0726 en-DK
# Forklift Truck Attachments

| Extensible Crane Arm Type KT-K | Category | Price | Freight charges | Price including freight charges |
|---|---|---|---|---|
| **KT-K 2,5, hot-dip galvanized** | A | 1622,– | 143,– | 1765,– |
| **KT-K 5,0, painted** | A | 1625,– | 143,– | 1768,– |
| **KT-K 5,0, hot-dip galvanized** | A | 2092,– | 143,– | 2235,– |

| Barrow Tipper Type KW-ET | Category | Price | Freight charges | Price including freight charges |
|---|---|---|---|---|
| **KW-ET 250, painted** | E | 588,– | 106,– | 694,– |
| Lid, galvanized | E | 136,– | 15,– | 151,– |
| **KW-ET 250, hot-dip galvanized** | E | 900,– | 106,– | 1006,– |
| Lid, galvanized | E | 136,– | 15,– | 151,– |
| **KW-ET 400, painted** | E | 648,– | 106,– | 754,– |
| Lid, galvanized | E | 156,– | 16,– | 172,– |
| **KW-ET 400, hot-dip galvanized** | E | 998,– | 106,– | 1104,– |
| Lid, galvanized | E | 156,– | 16,– | 172,– |
| **KW-ET 600, painted** | E | 808,– | 143,– | 951,– |
| Lid, galvanized | E | 173,– | 20,– | 193,– |
| **KW-ET 600, hot-dip galvanized** | E | 1166,– | 143,– | 1309,– |
| Lid, galvanized | E | 173,– | 20,– | 193,– |
| **KW-ET 1000, painted** | E | 997,– | 143,– | 1140,– |
| Lid, galvanized | E | 193,– | 22,– | 215,– |
| **KW-ET 1000, hot-dip galvanized** | E | 1591,– | 143,– | 1734,– |
| Lid, galvanized | E | 193,– | 22,– | 215,– |

| Loading Arm Type LA | Category | Price | Freight charges | Price including freight charges |
|---|---|---|---|---|
| **LA 1600-1,0, painted** | A | 542,– | 106,– | 648,– |
| **LA 1600-1,0, hot-dip galvanized** | A | 581,– | 106,– | 687,– |
| **LA 1600-2,5, painted** | A | 786,– | 106,– | 892,– |
| **LA 1600-2,5, hot-dip galvanized** | A | 927,– | 106,– | 1033,– |
| **LA 1600-5,0, painted** | A | 1133,– | 143,– | 1276,– |
| **LA 1600-5,0, hot-dip galvanized** | A | 1325,– | 143,– | 1468,– |
| **LA 2400-1,0, painted** | A | 569,– | 106,– | 675,– |
| **LA 2400-1,0, hot-dip galvanized** | A | 632,– | 106,– | 738,– |
| **LA 2400-2,5, painted** | A | 877,– | 143,– | 1020,– |
| **LA 2400-2,5, hot-dip galvanized** | A | 1017,– | 143,– | 1160,– |
| **LA 2400-5,0, painted** | A | 1250,– | 143,– | 1393,– |
| **LA 2400-5,0, hot-dip galvanized** | A | 1480,– | 143,– | 1623,– |
| **LA 25-1,0, painted** | A | 632,– | 106,– | 738,– |
| **LA 25-1,0, hot-dip galvanized** | A | 683,– | 106,– | 789,– |

| Loading Arm Type LAT | Category | Price | Freight charges | Price including freight charges |
|---|---|---|---|---|
| **LAT 25-1,0, painted** | A | 766,– | 106,– | 872,– |
| **LAT 25-1,0, hot-dip galvanized** | A | 838,– | 106,– | 944,– |

| Scissor Gripper Type LG | Category | Price | Freight charges | Price including freight charges |
|---|---|---|---|---|
| **LG 60, painted** | B | 245,– | 32,– | 277,– |
| **LG 60, galvanized** | B | 223,– | 32,– | 255,– |

Prices in EUR, valid EXW DE-46354 Südlohn, DE-38820 Halberstadt, unpacked
Freight charges valid CPT Denmark, islands and oversea territories excluded



BAUER GmbH
Eichendorffstr. 62
46354 Südlohn, Germany

Tel. +49 2862 70 90
info@bauer-suedlohn.com
www.bauer-suedlohn.com

Geschäftsführer
Patrick Bauer, Pascal Bauer
Amtsgericht Coesfeld HRB 5259

TÜVNORD
TÜV NORD CERT GmbH
DIN EN ISO 9001
tuev-nord.de

# Price List 0726 en-DK
# Forklift Truck Attachments

| Scissor Gripper Type LG | Category | Price | Freight charges | Price including freight charges |
|---|---|---|---|---|
| LG 200, painted | B | 245,– | 32,– | 277,– |
| LG 200, galvanized | B | 223,– | 32,– | 255,– |

| Container for Long Material Type LGK | Category | Price | Freight charges | Price including freight charges |
|---|---|---|---|---|
| LGK, painted | A | 1376,– | 143,– | 1519,– |
| Castor Set, polyamide, Load capacity 1350 kg / castor set | A | 192,– | 15,– | 207,– |
| LGK, hot-dip galvanized | A | 1676,– | 143,– | 1819,– |
| Castor Set, polyamide, Load capacity 1350 kg / castor set | A | 192,– | 15,– | 207,– |

| Long Material Carrier Type LGT | Category | Price | Freight charges | Price including freight charges |
|---|---|---|---|---|
| LGT 1,5, painted | A | 1929,– | 201,– | 2130,– |
| LGT 1,5, hot-dip galvanized | A | 2263,– | 201,– | 2464,– |
| LGT 2,5, painted | A | 2164,– | on request | on request |
| LGT 2,5, hot-dip galvanized | A | 2590,– | on request | on request |
| LGT 3,5, painted | A | 2989,– | on request | on request |
| LGT 3,5, hot-dip galvanized | A | 3670,– | on request | on request |
| LGT 4,5, painted | A | 3302,– | on request | on request |
| LGT 4,5, hot-dip galvanized | A | 4071,– | on request | on request |

| Drum Claw Type LGZ | Category | Price | Freight charges | Price including freight charges |
|---|---|---|---|---|
| LGZ 60, painted | B | 225,– | 32,– | 257,– |
| LGZ 60, galvanized | B | 211,– | 32,– | 243,– |
| LGZ 200, painted | B | 225,– | 32,– | 257,– |
| LGZ 200, galvanized | B | 211,– | 32,– | 243,– |

| Crane Hook Type LH | Category | Price | Freight charges | Price including freight charges |
|---|---|---|---|---|
| LH-I 1,0, painted | A | 199,– | 32,– | 231,– |
| LH-I 1,0, hot-dip galvanized | A | 223,– | 32,– | 255,– |
| LH-I 1,5, painted | A | 218,– | 32,– | 250,– |
| LH-I 1,5, hot-dip galvanized | A | 242,– | 32,– | 274,– |
| LH-I 2,0, painted | A | 229,– | 32,– | 261,– |
| LH-I 2,0, hot-dip galvanized | A | 254,– | 32,– | 286,– |
| LH-I 2,5, painted | A | 255,– | 32,– | 287,– |
| LH-I 2,5, hot-dip galvanized | A | 279,– | 32,– | 311,– |
| LH-I 3,0, painted | A | 331,– | 32,– | 363,– |
| LH-I 3,0, hot-dip galvanized | A | 356,– | 32,– | 388,– |
| LH-II 1,5, painted | A | 329,– | 32,– | 361,– |
| LH-II 1,5, hot-dip galvanized | A | 378,– | 32,– | 410,– |
| LH-II 2,5, painted | A | 434,– | 32,– | 466,– |
| LH-II 2,5, hot-dip galvanized | A | 516,– | 32,– | 548,– |
| LH-II 5,0, painted | A | 720,– | 106,– | 826,– |
| LH-II 5,0, hot-dip galvanized | A | 808,– | 106,– | 914,– |
| LH-II 7,5, painted | A | 856,– | 106,– | 962,– |
| LH-II 7,5, hot-dip galvanized | A | 949,– | 106,– | 1055,– |

Prices in EUR, valid EXW DE-46354 Südlohn, DE-38820 Halberstadt, unpacked
Freight charges valid CPT Denmark, islands and oversea territories excluded



BAUER GmbH
Eichendorffstr. 62
46354 Südlohn, Germany

Tel. +49 2862 70 90
info@bauer-suedlohn.com
www.bauer-suedlohn.com

Geschäftsführer
Patrick Bauer, Pascal Bauer
Amtsgericht Coesfeld HRB 5259

TÜVNORD
TÜV NORD CERT GmbH
DIN EN ISO 9001
tuev-nord.de

# Price List 0726 en-DK
# Forklift Truck Attachments

| Long Load Handler Type LSL | Category | Price | Freight charges | Price including freight charges |
|---|---|---|---|---|
| LSL, painted | A | 1141,– | 143,– | 1284,– |
| LSL, hot-dip galvanized | A | 1310,– | 143,– | 1453,– |

| Long Material Sidecar Type LSW | Category | Price | Freight charges | Price including freight charges |
|---|---|---|---|---|
| LSW 1,3, painted | A | 953,– | 106,– | 1059,– |
| LSW 1,3, hot-dip galvanized | A | 1017,– | 143,– | 1160,– |
| LSW 2,5, painted | A | 1132,– | 106,– | 1238,– |
| LSW 2,5, hot-dip galvanized | A | 1197,– | 143,– | 1340,– |

| Access Safety Platform Type MB-B | Category | Price | Freight charges | Price including freight charges |
|---|---|---|---|---|
| MB-B, painted | A | 1085,– | 143,– | 1228,– |
| Castor Set, polyamide, Load capacity 1050 kg / castor set | A | 136,– | 15,– | 151,– |

| Access Safety Platform Type MB-B/L | Category | Price | Freight charges | Price including freight charges |
|---|---|---|---|---|
| MB-B/L, painted | A | 1274,– | 143,– | 1417,– |
| Castor Set, polyamide, Load capacity 1050 kg / castor set | A | 136,– | 15,– | 151,– |

| Access Safety Platform Type MB-D | Category | Price | Freight charges | Price including freight charges |
|---|---|---|---|---|
| MB-D, painted | A | 908,– | 143,– | 1051,– |
| Castor Set, polyamide, Load capacity 1050 kg / castor set | A | 136,– | 15,– | 151,– |

| Access Safety Platform Type MB-D/L | Category | Price | Freight charges | Price including freight charges |
|---|---|---|---|---|
| MB-D/L, painted | A | 1096,– | 143,– | 1239,– |
| Castor Set, polyamide, Load capacity 1050 kg / castor set | A | 136,– | 15,– | 151,– |

| Access Safety Platform Type MB-F | Category | Price | Freight charges | Price including freight charges |
|---|---|---|---|---|
| MB-F, painted | A | 1074,– | 143,– | 1217,– |
| Castor Set, polyamide, Load capacity 1050 kg / castor set | A | 136,– | 15,– | 151,– |

| Access Safety Platform Type MB-II | Category | Price | Freight charges | Price including freight charges |
|---|---|---|---|---|
| MB-II, painted | A | 994,– | 143,– | 1137,– |
| Castor Set, polyamide, Load capacity 1050 kg / castor set | A | 136,– | 15,– | 151,– |
| MB-II, hot-dip galvanized | A | 1171,– | 143,– | 1314,– |
| Castor Set, polyamide, Load capacity 1050 kg / castor set | A | 136,– | 15,– | 151,– |

| Access Safety Platform Type MB-K-IV | Category | Price | Freight charges | Price including freight charges |
|---|---|---|---|---|
| MB-K-IV, painted | A | 2012,– | 196,– | 2208,– |

| Access Safety Platform Type MB-ST | Category | Price | Freight charges | Price including freight charges |
|---|---|---|---|---|
| MB-ST, painted | A | 2576,– | 143,– | 2719,– |
| Castor Set, polyamide, Load capacity 1050 kg / castor set | A | 136,– | 15,– | 151,– |

| Access Safety Platform Type MB-ST/L | Category | Price | Freight charges | Price including freight charges |
|---|---|---|---|---|
| MB-ST/L, painted | A | 2764,– | 143,– | 2907,– |

Prices in EUR, valid EXW DE-46354 Südlohn, DE-38820 Halberstadt, unpacked
Freight charges valid CPT Denmark, islands and oversea territories excluded



BAUER GmbH
Eichendorffstr. 62
46354 Südlohn, Germany

Tel. +49 2862 70 90
info@bauer-suedlohn.com
www.bauer-suedlohn.com

Geschäftsführer
Patrick Bauer, Pascal Bauer
Amtsgericht Coesfeld HRB 5259

TÜVNORD
TÜV NORD CERT GmbH
DIN EN ISO 9001
tuev-nord.de

# Price List 0726 en-DK
# Forklift Truck Attachments

| Access Safety Platform Type MB-ST/L | Category | Price | Freight charges | Price including freight charges |
|---|---|---|---|---|
| Castor Set, polyamide, Load capacity 1050 kg / castor set | A | 136,– | 15,– | 151,– |

| Access Safety Platform Type MB-ST/T | Category | Price | Freight charges | Price including freight charges |
|---|---|---|---|---|
| **MB-ST/T, painted** | A | 2903,– | 143,– | 3046,– |
| Castor Set, polyamide, Load capacity 1050 kg / castor set | A | 136,– | 15,– | 151,– |

| Access Safety Platform Type MB-ST/T/L | Category | Price | Freight charges | Price including freight charges |
|---|---|---|---|---|
| **MB-ST/T/L, painted** | A | 3092,– | 143,– | 3235,– |
| Castor Set, polyamide, Load capacity 1050 kg / castor set | A | 136,– | 15,– | 151,– |

| Mini Tilting Container Type MGU | Category | Price | Freight charges | Price including freight charges |
|---|---|---|---|---|
| **MGU 230, painted** | A | 569,– | 106,– | 675,– |
| Lid, galvanized | A | 131,– | 18,– | 149,– |
| Castor Set, polyamide, Load capacity 1050 kg / castor set | A | 156,– | 15,– | 171,– |
| Skip Body Welded Oil and Watertight | A | 78,– | 0,– | 78,– |
| **MGU 230, hot-dip galvanized** | A | 655,– | 143,– | 798,– |
| Lid, galvanized | A | 131,– | 18,– | 149,– |
| Castor Set, polyamide, Load capacity 1050 kg / castor set | A | 156,– | 15,– | 171,– |
| Skip Body Welded Oil and Watertight | A | 78,– | 0,– | 78,– |
| **MGU 270, painted** | A | 621,– | 143,– | 764,– |
| Lid, galvanized | A | 131,– | 18,– | 149,– |
| Castor Set, polyamide, Load capacity 1050 kg / castor set | A | 156,– | 15,– | 171,– |
| Skip Body Welded Oil and Watertight | A | 78,– | 0,– | 78,– |
| **MGU 270, hot-dip galvanized** | A | 729,– | 143,– | 872,– |
| Lid, galvanized | A | 131,– | 18,– | 149,– |
| Castor Set, polyamide, Load capacity 1050 kg / castor set | A | 156,– | 15,– | 171,– |
| Skip Body Welded Oil and Watertight | A | 78,– | 0,– | 78,– |
| **MGU 460, painted** | A | 815,– | 143,– | 958,– |
| Lid, galvanized | A | 169,– | 22,– | 191,– |
| Castor Set, polyamide, Load capacity 1050 kg / castor set | A | 156,– | 15,– | 171,– |
| Skip Body Welded Oil and Watertight | A | 78,– | 0,– | 78,– |
| **MGU 460, hot-dip galvanized** | A | 967,– | 143,– | 1110,– |
| Lid, galvanized | A | 169,– | 22,– | 191,– |
| Castor Set, polyamide, Load capacity 1050 kg / castor set | A | 156,– | 15,– | 171,– |
| Skip Body Welded Oil and Watertight | A | 78,– | 0,– | 78,– |
| **MGU 610, painted** | A | 919,– | 143,– | 1062,– |
| Lid, galvanized | A | 181,– | 26,– | 207,– |
| Castor Set, polyamide, Load capacity 1050 kg / castor set | A | 156,– | 15,– | 171,– |
| Skip Body Welded Oil and Watertight | A | 78,– | 0,– | 78,– |
| **MGU 610, hot-dip galvanized** | A | 1089,– | 143,– | 1232,– |
| Lid, galvanized | A | 181,– | 26,– | 207,– |
| Castor Set, polyamide, Load capacity 1050 kg / castor set | A | 156,– | 15,– | 171,– |
| Skip Body Welded Oil and Watertight | A | 78,– | 0,– | 78,– |

Prices in EUR, valid EXW DE-46354 Südlohn, DE-38820 Halberstadt, unpacked
Freight charges valid CPT Denmark, islands and oversea territories excluded



BAUER GmbH
Eichendorffstr. 62
46354 Südlohn, Germany

Tel. +49 2862 70 90
info@bauer-suedlohn.com
www.bauer-suedlohn.com

Geschäftsführer
Patrick Bauer, Pascal Bauer
Amtsgericht Coesfeld HRB 5259

TÜVNORD
TÜV NORD CERT GmbH
DIN EN ISO 9001
tuev-nord.de

# Price List 0726 en-DK
# Forklift Truck Attachments

| Wheelie Bin Jack Type MH | Category | Price | Freight charges | Price including freight charges |
|---|---|---|---|---|
| **MH-I, painted** | A | 657,– | 106,– | 763,– |
| **MH-II, painted** | A | 725,– | 106,– | 831,– |
| **MH-III, painted** | A | 784,– | 106,– | 890,– |

| Wheelie Bin Tipper Type MK | Category | Price | Freight charges | Price including freight charges |
|---|---|---|---|---|
| **MK 120, painted** | A | 1273,– | 106,– | 1379,– |
| **MK 240, painted** | A | 1273,– | 106,– | 1379,– |

| Wheelie Bin Tipper Type MK-H | Category | Price | Freight charges | Price including freight charges |
|---|---|---|---|---|
| **MK-H 120, painted** | A | 1902,– | 106,– | 2008,– |
| **MK-H 240, painted** | A | 1902,– | 143,– | 2045,– |

| Mini Container With Drop Away Base Type MSB | Category | Price | Freight charges | Price including freight charges |
|---|---|---|---|---|
| **MSB 150, painted** | A | 636,– | 106,– | 742,– |
| Castor Set, polyamide, Load capacity 1050 kg / castor set | A | 156,– | 15,– | 171,– |
| Guiding Plates, galvanized | A | 73,– | 12,– | 85,– |
| **MSB 150, hot-dip galvanized** | A | 746,– | 106,– | 852,– |
| Castor Set, polyamide, Load capacity 1050 kg / castor set | A | 156,– | 15,– | 171,– |
| Guiding Plates, galvanized | A | 73,– | 12,– | 85,– |
| **MSB 250, painted** | A | 690,– | 106,– | 796,– |
| Castor Set, polyamide, Load capacity 1050 kg / castor set | A | 156,– | 15,– | 171,– |
| Guiding Plates, galvanized | A | 73,– | 12,– | 85,– |
| **MSB 250, hot-dip galvanized** | A | 826,– | 106,– | 932,– |
| Castor Set, polyamide, Load capacity 1050 kg / castor set | A | 156,– | 15,– | 171,– |
| Guiding Plates, galvanized | A | 73,– | 12,– | 85,– |
| **MSB 400, painted** | A | 850,– | 106,– | 956,– |
| Castor Set, polyamide, Load capacity 1050 kg / castor set | A | 156,– | 15,– | 171,– |
| Guiding Plates, galvanized | A | 73,– | 12,– | 85,– |
| **MSB 400, hot-dip galvanized** | A | 1018,– | 143,– | 1161,– |
| Castor Set, polyamide, Load capacity 1050 kg / castor set | A | 156,– | 15,– | 171,– |
| Guiding Plates, galvanized | A | 73,– | 12,– | 85,– |

| Tilting Container Type NK | Category | Price | Freight charges | Price including freight charges |
|---|---|---|---|---|
| **NK 30, painted** | A | 700,– | 143,– | 843,– |
| Lid, galvanized | A | 98,– | 15,– | 113,– |
| Castor Set, polyamide, Load capacity 1350 kg / castor set | A | 192,– | 15,– | 207,– |
| Skip Body Welded Oil and Watertight | A | 78,– | 0,– | 78,– |
| **NK 30, hot-dip galvanized** | A | 984,– | 143,– | 1127,– |
| Lid, galvanized | A | 98,– | 15,– | 113,– |
| Castor Set, polyamide, Load capacity 1350 kg / castor set | A | 192,– | 15,– | 207,– |
| Skip Body Welded Oil and Watertight | A | 78,– | 0,– | 78,– |
| **NK 50, painted** | A | 984,– | 143,– | 1127,– |
| Lid, galvanized | A | 98,– | 18,– | 116,– |
| Castor Set, polyamide, Load capacity 1350 kg / castor set | A | 192,– | 15,– | 207,– |
| Skip Body Welded Oil and Watertight | A | 78,– | 0,– | 78,– |

Prices in EUR, valid EXW DE-46354 Südlohn, DE-38820 Halberstadt, unpacked
Freight charges valid CPT Denmark, islands and oversea territories excluded



BAUER GmbH
Eichendorffstr. 62
46354 Südlohn, Germany

Tel. +49 2862 70 90
info@bauer-suedlohn.com
www.bauer-suedlohn.com

Geschäftsführer
Patrick Bauer, Pascal Bauer
Amtsgericht Coesfeld HRB 5259

TÜVNORD
TÜV NORD CERT GmbH
DIN EN ISO 9001
tuev-nord.de

# Price List 0726 en-DK
# Forklift Truck Attachments

| Tilting Container Type NK | Category | Price | Freight charges | Price including freight charges |
|---|---|---|---|---|
| **NK 50, hot-dip galvanized** | A | 1327,– | 143,– | 1470,– |
| Lid, galvanized | A | 98,– | 18,– | 116,– |
| Castor Set, polyamide, Load capacity 1350 kg / castor set | A | 192,– | 15,– | 207,– |
| Skip Body Welded Oil and Watertight | A | 78,– | 0,– | 78,– |
| **NK 75, painted** | A | 1115,– | 201,– | 1316,– |
| Lid, galvanized | A | 142,– | 22,– | 164,– |
| Castor Set, polyamide, Load capacity 1350 kg / castor set | A | 192,– | 15,– | 207,– |
| Skip Body Welded Oil and Watertight | A | 78,– | 0,– | 78,– |
| **NK 75, hot-dip galvanized** | A | 1743,– | 201,– | 1944,– |
| Lid, galvanized | A | 142,– | 22,– | 164,– |
| Castor Set, polyamide, Load capacity 1350 kg / castor set | A | 192,– | 15,– | 207,– |
| Skip Body Welded Oil and Watertight | A | 78,– | 0,– | 78,– |
| **NK 100, painted** | A | 1508,– | 201,– | 1709,– |
| Lid, galvanized | A | 173,– | 27,– | 200,– |
| Castor Set, polyamide, Load capacity 1350 kg / castor set | A | 192,– | 15,– | 207,– |
| Skip Body Welded Oil and Watertight | A | 121,– | 0,– | 121,– |
| **NK 100, hot-dip galvanized** | A | 2070,– | 201,– | 2271,– |
| Lid, galvanized | A | 173,– | 27,– | 200,– |
| Castor Set, polyamide, Load capacity 1350 kg / castor set | A | 192,– | 15,– | 207,– |
| Skip Body Welded Oil and Watertight | A | 121,– | 0,– | 121,– |

| Cylindrical Container Type RB | Category | Price | Freight charges | Price including freight charges |
|---|---|---|---|---|
| **RB 300, painted** | A | 679,– | 106,– | 785,– |
| Lid, aluminium | A | 160,– | 14,– | 174,– |
| Castor Set, polyamide, Load capacity 1050 kg / castor set | A | 156,– | 15,– | 171,– |
| **RB 450, painted** | A | 793,– | 106,– | 899,– |
| Lid, aluminium | A | 160,– | 14,– | 174,– |
| Castor Set, polyamide, Load capacity 1050 kg / castor set | A | 156,– | 15,– | 171,– |

| Tilting Container Type RD | Category | Price | Freight charges | Price including freight charges |
|---|---|---|---|---|
| **RD 750, painted** | A | 1202,– | 201,– | 1403,– |
| Castor Set, polyamide, Load capacity 1350 kg / castor set | A | 192,– | 15,– | 207,– |
| Skip Body Welded Oil and Watertight | A | 78,– | 0,– | 78,– |
| **RD 750, hot-dip galvanized** | A | 1602,– | 201,– | 1803,– |
| Castor Set, polyamide, Load capacity 1350 kg / castor set | A | 192,– | 15,– | 207,– |
| Skip Body Welded Oil and Watertight | A | 78,– | 0,– | 78,– |
| **RD 1000, painted** | A | 1449,– | 201,– | 1650,– |
| Castor Set, polyamide, Load capacity 1350 kg / castor set | A | 192,– | 15,– | 207,– |
| Skip Body Welded Oil and Watertight | A | 121,– | 0,– | 121,– |
| **RD 1000, hot-dip galvanized** | A | 1933,– | 201,– | 2134,– |
| Castor Set, polyamide, Load capacity 1350 kg / castor set | A | 192,– | 15,– | 207,– |
| Skip Body Welded Oil and Watertight | A | 121,– | 0,– | 121,– |

| Platform for Off-Cuts Type RGP | Category | Price | Freight charges | Price including freight charges |
|---|---|---|---|---|
| **RGP-1, painted** | A | 2437,– | on request | on request |

Prices in EUR, valid EXW DE-46354 Südlohn, DE-38820 Halberstadt, unpacked
Freight charges valid CPT Denmark, islands and oversea territories excluded



BAUER GmbH
Eichendorffstr. 62
46354 Südlohn, Germany

Tel. +49 2862 70 90
info@bauer-suedlohn.com
www.bauer-suedlohn.com

Geschäftsführer
Patrick Bauer, Pascal Bauer
Amtsgericht Coesfeld HRB 5259

TÜVNORD
TÜV NORD CERT GmbH
DIN EN ISO 9001
tuev-nord.de

# Price List 0726 en-DK
# Forklift Truck Attachments

| Platform for Off-Cuts Type RGP | Category | Price | Freight charges | Price including freight charges |
|---|---|---|---|---|
| RGP-1, hot-dip galvanized | A | 3118,– | on request | on request |
| RGP-2, painted | A | 2669,– | on request | on request |
| RGP-2, hot-dip galvanized | A | 3558,– | on request | on request |
| RGP-3, painted | A | 2907,– | on request | on request |
| RGP-3, hot-dip galvanized | A | 3916,– | on request | on request |

| Shunting Aid Type RH | Category | Price | Freight charges | Price including freight charges |
|---|---|---|---|---|
| RH, painted | A | 426,– | 32,– | 458,– |

| Shunting Aid Type RH-AC | Category | Price | Freight charges | Price including freight charges |
|---|---|---|---|---|
| RH-AC, painted | A | 2305,– | 201,– | 2506,– |

| Shunting Aid Type RH-RA | Category | Price | Freight charges | Price including freight charges |
|---|---|---|---|---|
| RH-RA, painted | A | 1586,– | 106,– | 1692,– |

| Shunting Aid Type RH-RAK | Category | Price | Freight charges | Price including freight charges |
|---|---|---|---|---|
| RH-RAK, painted | A | 1691,– | 106,– | 1797,– |

| Shunting Aid Type RH-RM | Category | Price | Freight charges | Price including freight charges |
|---|---|---|---|---|
| RH-RM, painted | A | 1178,– | 106,– | 1284,– |

| Shunting Aid Type RH-RMK | Category | Price | Freight charges | Price including freight charges |
|---|---|---|---|---|
| RH-RMK, painted | A | 1285,– | 106,– | 1391,– |

| Drum Lifter Type RS 60 | Category | Price | Freight charges | Price including freight charges |
|---|---|---|---|---|
| RS 60-I, painted | B | 1013,– | 106,– | 1119,– |
| RS 60-I, hot-dip galvanized | B | 1076,– | 106,– | 1182,– |
| RS 60-II, painted | B | 1713,– | 106,– | 1819,– |
| RS 60-II, hot-dip galvanized | B | 1798,– | 106,– | 1904,– |

| Drum Lifter Type RS | Category | Price | Freight charges | Price including freight charges |
|---|---|---|---|---|
| RS-I/91, painted | B | 1701,– | 143,– | 1844,– |
| RS-I/91, hot-dip galvanized | B | 1945,– | 143,– | 2088,– |
| RS-II/91, painted | B | 2948,– | 143,– | 3091,– |
| RS-II/91, hot-dip galvanized | B | 3320,– | 143,– | 3463,– |
| RS-I/M, painted | B | 1556,– | 106,– | 1662,– |
| RS-I/M, hot-dip galvanized | B | 1798,– | 143,– | 1941,– |
| RS-II/M, painted | B | 2663,– | 143,– | 2806,– |
| RS-II/M, hot-dip galvanized | B | 3030,– | 143,– | 3173,– |

| Drum Lifter Type RS/D 91 | Category | Price | Freight charges | Price including freight charges |
|---|---|---|---|---|
| RS-I/D 91, painted | B | 1488,– | 143,– | 1631,– |
| RS-I/D 91, hot-dip galvanized | B | 1730,– | 143,– | 1873,– |
| RS-II/D 91, painted | B | 2521,– | 143,– | 2664,– |

Prices in EUR, valid EXW DE-46354 Südlohn, DE-38820 Halberstadt, unpacked
Freight charges valid CPT Denmark, islands and oversea territories excluded



BAUER GmbH
Eichendorffstr. 62
46354 Südlohn, Germany

Tel. +49 2862 70 90
info@bauer-suedlohn.com
www.bauer-suedlohn.com

Geschäftsführer
Patrick Bauer, Pascal Bauer
Amtsgericht Coesfeld HRB 5259

TÜVNORD
TÜV NORD CERT GmbH
DIN EN ISO 9001
tuev-nord.de

# Price List 0726 en-DK
# Forklift Truck Attachments

| Drum Lifter Type RS/D 91 | Category | Price | Freight charges | Price including freight charges |
|---|---|---|---|---|
| **RS-II/D 91, hot-dip galvanized** | B | 2887,– | 143,– | 3030,– |

| Swarf Tilting Container Type S3S | Category | Price | Freight charges | Price including freight charges |
|---|---|---|---|---|
| **S3S 300, painted** | A | 1357,– | 143,– | 1500,– |
| Lid, galvanized | A | 174,– | 18,– | 192,– |
| Castor Set, polyamide, Load capacity 1050 kg / castor set | A | 136,– | 15,– | 151,– |
| **S3S 300, hot-dip galvanized** | A | 1454,– | 201,– | 1655,– |
| Lid, galvanized | A | 174,– | 18,– | 192,– |
| Castor Set, polyamide, Load capacity 1050 kg / castor set | A | 136,– | 15,– | 151,– |
| **S3S 600, painted** | A | 1413,– | 201,– | 1614,– |
| Lid, galvanized | A | 196,– | 22,– | 218,– |
| Castor Set, polyamide, Load capacity 1050 kg / castor set | A | 136,– | 15,– | 151,– |
| **S3S 600, hot-dip galvanized** | A | 1514,– | 201,– | 1715,– |
| Lid, galvanized | A | 196,– | 22,– | 218,– |
| Castor Set, polyamide, Load capacity 1050 kg / castor set | A | 136,– | 15,– | 151,– |

| Swarf Tilting Container Type S4A | Category | Price | Freight charges | Price including freight charges |
|---|---|---|---|---|
| **S4A 600, painted** | A | 1271,– | 143,– | 1414,– |
| Lid, galvanized | A | 196,– | 22,– | 218,– |
| **S4A 600, hot-dip galvanized** | A | 1418,– | 143,– | 1561,– |
| Lid, galvanized | A | 196,– | 22,– | 218,– |
| **S4A 900, painted** | A | 1408,– | 201,– | 1609,– |
| Lid, galvanized | A | 223,– | 27,– | 250,– |
| **S4A 900, hot-dip galvanized** | A | 1595,– | 201,– | 1796,– |
| Lid, galvanized | A | 223,– | 27,– | 250,– |
| **S4A 1200, painted** | A | 1497,– | 201,– | 1698,– |
| Lid, galvanized | A | 223,– | 26,– | 249,– |
| **S4A 1200, hot-dip galvanized** | A | 1730,– | 201,– | 1931,– |
| Lid, galvanized | A | 223,– | 26,– | 249,– |

| Container With Drop Away Base Type SB | Category | Price | Freight charges | Price including freight charges |
|---|---|---|---|---|
| **SB 500, painted** | B | 1000,– | 143,– | 1143,– |
| Lid, galvanized | B | 143,– | 16,– | 159,– |
| Castor Set, polyamide, Load capacity 1350 kg / castor set | A | 192,– | 15,– | 207,– |
| Heavy-duty Castor Set, polyamide, Load capacity 2550 kg / castor set | A | 379,– | 15,– | 394,– |
| **SB 500, hot-dip galvanized** | B | 1303,– | 143,– | 1446,– |
| Lid, galvanized | B | 143,– | 16,– | 159,– |
| Castor Set, polyamide, Load capacity 1350 kg / castor set | A | 192,– | 15,– | 207,– |
| Heavy-duty Castor Set, polyamide, Load capacity 2550 kg / castor set | A | 379,– | 15,– | 394,– |
| **SB 750, painted** | B | 1094,– | 143,– | 1237,– |
| Lid, galvanized | B | 143,– | 16,– | 159,– |
| Castor Set, polyamide, Load capacity 1350 kg / castor set | A | 192,– | 15,– | 207,– |
| Heavy-duty Castor Set, polyamide, Load capacity 2550 kg / castor set | A | 379,– | 15,– | 394,– |
| **SB 750, hot-dip galvanized** | B | 1520,– | 201,– | 1721,– |
| Lid, galvanized | B | 143,– | 16,– | 159,– |

Prices in EUR, valid EXW DE-46354 Südlohn, DE-38820 Halberstadt, unpacked
Freight charges valid CPT Denmark, islands and oversea territories excluded



BAUER GmbH
Eichendorffstr. 62
46354 Südlohn, Germany

Tel. +49 2862 70 90
info@bauer-suedlohn.com
www.bauer-suedlohn.com

Geschäftsführer
Patrick Bauer, Pascal Bauer
Amtsgericht Coesfeld HRB 5259

TÜVNORD
TÜV NORD CERT GmbH
DIN EN ISO 9001
tuev-nord.de

# Price List 0726 en-DK
# Forklift Truck Attachments

| Container With Drop Away Base Type SB | Category | Price | Freight charges | Price including freight charges |
|---|---|---|---|---|
| Castor Set, polyamide, Load capacity 1350 kg / castor set | A | 192,– | 15,– | 207,– |
| Heavy-duty Castor Set, polyamide, Load capacity 2550 kg / castor set | A | 379,– | 15,– | 394,– |
| **SB 1000, painted** | B | 1295,– | 201,– | 1496,– |
| Lid, galvanized | B | 143,– | 16,– | 159,– |
| Castor Set, polyamide, Load capacity 1350 kg / castor set | A | 192,– | 15,– | 207,– |
| Heavy-duty Castor Set, polyamide, Load capacity 2550 kg / castor set | A | 379,– | 15,– | 394,– |
| **SB 1000, hot-dip galvanized** | B | 1801,– | 201,– | 2002,– |
| Lid, galvanized | B | 143,– | 16,– | 159,– |
| Castor Set, polyamide, Load capacity 1350 kg / castor set | A | 192,– | 15,– | 207,– |
| Heavy-duty Castor Set, polyamide, Load capacity 2550 kg / castor set | A | 379,– | 15,– | 394,– |
| **SB 1500, painted** | B | 1755,– | 201,– | 1956,– |
| Lid, galvanized | B | 254,– | 21,– | 275,– |
| Castor Set, polyamide, Load capacity 1350 kg / castor set | A | 192,– | 15,– | 207,– |
| Heavy-duty Castor Set, polyamide, Load capacity 2550 kg / castor set | A | 379,– | 15,– | 394,– |
| **SB 1500, hot-dip galvanized** | B | 2443,– | 256,– | 2699,– |
| Lid, galvanized | B | 254,– | 21,– | 275,– |
| Castor Set, polyamide, Load capacity 1350 kg / castor set | A | 192,– | 15,– | 207,– |
| Heavy-duty Castor Set, polyamide, Load capacity 2550 kg / castor set | A | 379,– | 15,– | 394,– |
| **SB 2000, painted** | B | 1803,– | 256,– | 2059,– |
| Lid, galvanized | B | 254,– | 21,– | 275,– |
| Castor Set, polyamide, Load capacity 1350 kg / castor set | A | 192,– | 15,– | 207,– |
| Heavy-duty Castor Set, polyamide, Load capacity 2550 kg / castor set | A | 379,– | 15,– | 394,– |
| **SB 2000, hot-dip galvanized** | B | 2581,– | 256,– | 2837,– |
| Lid, galvanized | B | 254,– | 21,– | 275,– |
| Castor Set, polyamide, Load capacity 1350 kg / castor set | A | 192,– | 15,– | 207,– |
| Heavy-duty Castor Set, polyamide, Load capacity 2550 kg / castor set | A | 379,– | 15,– | 394,– |

| Collecting System Type SBS | Category | Price | Freight charges | Price including freight charges |
|---|---|---|---|---|
| **SBS 500, painted** | C | 399,– | 143,– | 542,– |
| Trolley TW 500, hot-dip galvanized | C | 258,– | 106,– | 364,– |
| **SBS 500, hot-dip galvanized** | C | 472,– | 143,– | 615,– |
| Trolley TW 500, hot-dip galvanized | C | 258,– | 106,– | 364,– |
| **SBS 1000, painted** | C | 509,– | 143,– | 652,– |
| Trolley TW 1000, hot-dip galvanized | C | 297,– | 106,– | 403,– |
| **SBS 1000, hot-dip galvanized** | C | 626,– | 143,– | 769,– |
| Trolley TW 1000, hot-dip galvanized | C | 297,– | 106,– | 403,– |
| **SBS 2000, painted** | C | 807,– | 254,– | 1061,– |
| Trolley TW 2000, hot-dip galvanized | C | 505,– | 106,– | 611,– |
| **SBS 2000, hot-dip galvanized** | C | 968,– | 254,– | 1222,– |
| Trolley TW 2000, hot-dip galvanized | C | 505,– | 106,– | 611,– |

| Filling Hopper Type SBT | Category | Price | Freight charges | Price including freight charges |
|---|---|---|---|---|
| **SBT, painted** | A | 1671,– | 201,– | 1872,– |

Prices in EUR, valid EXW DE-46354 Südlohn, DE-38820 Halberstadt, unpacked
Freight charges valid CPT Denmark, islands and oversea territories excluded



BAUER GmbH
Eichendorffstr. 62
46354 Südlohn, Germany

Tel. +49 2862 70 90
info@bauer-suedlohn.com
www.bauer-suedlohn.com

Geschäftsführer
Patrick Bauer, Pascal Bauer
Amtsgericht Coesfeld HRB 5259

TÜVNORD
TÜV NORD CERT GmbH
DIN EN ISO 9001
tuev-nord.de

# Price List 0726 en-DK
# Forklift Truck Attachments

| Snowdozer Type SCH-F | Category | Price | Freight charges | Price including freight charges |
|---|---|---|---|---|
| SCH-F 150, painted | A | 2233,– | 201,– | 2434,– |
| SCH-F 180, painted | A | 2507,– | 201,– | 2708,– |
| SCH-F 210, painted | A | 2818,– | 201,– | 3019,– |
| SCH-F 240, painted | A | 3095,– | 309,– | 3404,– |

| Snowdozer Type SCH-G | Category | Price | Freight charges | Price including freight charges |
|---|---|---|---|---|
| SCH-G 150, painted | A | 1584,– | 143,– | 1727,– |
| SCH-G 180, painted | A | 1730,– | 143,– | 1873,– |
| SCH-G 210, painted | A | 1998,– | 201,– | 2199,– |
| SCH-G 240, painted | A | 2160,– | 254,– | 2414,– |

| Snowdozer Type SCH-L | Category | Price | Freight charges | Price including freight charges |
|---|---|---|---|---|
| SCH-L 1500, painted | A | 1182,– | 143,– | 1325,– |
| SCH-L 1500, hot-dip galvanized | A | 1310,– | 143,– | 1453,– |
| SCH-L 1800, painted | A | 1380,– | 143,– | 1523,– |
| SCH-L 1800, hot-dip galvanized | A | 1532,– | 143,– | 1675,– |

| Snow Plough Type SCH-P-G | Category | Price | Freight charges | Price including freight charges |
|---|---|---|---|---|
| SCH-P-G 150, painted | A | 2493,– | 201,– | 2694,– |
| SCH-P-G 180, painted | A | 2677,– | 201,– | 2878,– |
| SCH-P-G 210, painted | A | 2870,– | 201,– | 3071,– |
| SCH-P-G 240, painted | A | 3408,– | 254,– | 3662,– |

| Snow Plough Type SCH-P-S | Category | Price | Freight charges | Price including freight charges |
|---|---|---|---|---|
| SCH-P-S 150, painted | A | 2318,– | 201,– | 2519,– |
| SCH-P-S 180, painted | A | 2476,– | 201,– | 2677,– |
| SCH-P-S 210, painted | A | 2629,– | 201,– | 2830,– |
| SCH-P-S 240, painted | A | 3128,– | 254,– | 3382,– |

| Snow Plough Type SCH-P-V | Category | Price | Freight charges | Price including freight charges |
|---|---|---|---|---|
| SCH-P-V 150, painted | A | 2681,– | 201,– | 2882,– |
| SCH-P-V 180, painted | A | 2949,– | 201,– | 3150,– |
| SCH-P-V 210, painted | A | 3200,– | 201,– | 3401,– |
| SCH-P-V 240, painted | A | 3741,– | 254,– | 3995,– |

| Snowdozer Type SCH-S | Category | Price | Freight charges | Price including freight charges |
|---|---|---|---|---|
| SCH-S 150, painted | A | 1407,– | 143,– | 1550,– |
| SCH-S 180, painted | A | 1528,– | 143,– | 1671,– |
| SCH-S 210, painted | A | 1760,– | 201,– | 1961,– |
| SCH-S 240, painted | A | 1880,– | 254,– | 2134,– |

| Snow Plough Type SCH-U-G | Category | Price | Freight charges | Price including freight charges |
|---|---|---|---|---|
| SCH-U-G 150, painted | A | 2493,– | 201,– | 2694,– |
| SCH-U-G 180, painted | A | 2677,– | 201,– | 2878,– |

Prices in EUR, valid EXW DE-46354 Südlohn, DE-38820 Halberstadt, unpacked
Freight charges valid CPT Denmark, islands and oversea territories excluded



BAUER GmbH
Eichendorffstr. 62
46354 Südlohn, Germany

Tel. +49 2862 70 90
info@bauer-suedlohn.com
www.bauer-suedlohn.com

Geschäftsführer
Patrick Bauer, Pascal Bauer
Amtsgericht Coesfeld HRB 5259

TÜVNORD
TÜV NORD CERT GmbH
DIN EN ISO 9001
tuev-nord.de

# Price List 0726 en-DK
# Forklift Truck Attachments

| Snow Plough Type SCH-U-G | Category | Price | Freight charges | Price including freight charges |
|---|---|---|---|---|
| SCH-U-G 210, painted | A | 2870,– | 201,– | 3071,– |
| SCH-U-G 240, painted | A | 3408,– | 254,– | 3662,– |

| Snow Plough Type SCH-U-S | Category | Price | Freight charges | Price including freight charges |
|---|---|---|---|---|
| SCH-U-S 150, painted | A | 2318,– | 201,– | 2519,– |
| SCH-U-S 180, painted | A | 2476,– | 201,– | 2677,– |
| SCH-U-S 210, painted | A | 2629,– | 201,– | 2830,– |
| SCH-U-S 240, painted | A | 3128,– | 254,– | 3382,– |

| Snow Plough Type SCH-U-V | Category | Price | Freight charges | Price including freight charges |
|---|---|---|---|---|
| SCH-U-V 150, painted | A | 2681,– | 201,– | 2882,– |
| SCH-U-V 180, painted | A | 2949,– | 201,– | 3150,– |
| SCH-U-V 210, painted | A | 3200,– | 201,– | 3401,– |
| SCH-U-V 240, painted | A | 3741,– | 254,– | 3995,– |

| Snowdozer Type SCH-V | Category | Price | Freight charges | Price including freight charges |
|---|---|---|---|---|
| SCH-V 150, painted | A | 1769,– | 143,– | 1912,– |
| SCH-V 180, painted | A | 1991,– | 143,– | 2134,– |
| SCH-V 210, painted | A | 2331,– | 201,– | 2532,– |
| SCH-V 240, painted | A | 2492,– | 254,– | 2746,– |

| Silo Container Type SG | Category | Price | Freight charges | Price including freight charges |
|---|---|---|---|---|
| SG 375, painted | E | 1014,– | 143,– | 1157,– |
| Lid, galvanized | E | 131,– | 28,– | 159,– |
| SG 375, hot-dip galvanized | E | 1760,– | 143,– | 1903,– |
| Lid, galvanized | E | 131,– | 28,– | 159,– |
| SG 600, painted | E | 1209,– | 143,– | 1352,– |
| Lid, galvanized | E | 131,– | 28,– | 159,– |
| SG 600, hot-dip galvanized | E | 1951,– | 143,– | 2094,– |
| Lid, galvanized | E | 131,– | 28,– | 159,– |

| Silo Container Type SG-D | Category | Price | Freight charges | Price including freight charges |
|---|---|---|---|---|
| SG-D 375, painted | E | 1014,– | 106,– | 1120,– |
| Lid, galvanized | E | 131,– | 28,– | 159,– |
| SG-D 375, hot-dip galvanized | E | 1760,– | 143,– | 1903,– |
| Lid, galvanized | E | 131,– | 28,– | 159,– |
| SG-D 600, painted | E | 1209,– | 143,– | 1352,– |
| Lid, galvanized | E | 131,– | 28,– | 159,– |
| SG-D 600, hot-dip galvanized | E | 1951,– | 143,– | 2094,– |
| Lid, galvanized | E | 131,– | 28,– | 159,– |

| Silo Container Type SGK | Category | Price | Freight charges | Price including freight charges |
|---|---|---|---|---|
| SGK 50, painted | A | 1115,– | 143,– | 1258,– |
| SGK 50, hot-dip galvanized | A | 1142,– | 143,– | 1285,– |
| SGK 75, painted | A | 1214,– | 143,– | 1357,– |

Prices in EUR, valid EXW DE-46354 Südlohn, DE-38820 Halberstadt, unpacked
Freight charges valid CPT Denmark, islands and oversea territories excluded



BAUER GmbH
Eichendorffstr. 62
46354 Südlohn, Germany

Tel. +49 2862 70 90
info@bauer-suedlohn.com
www.bauer-suedlohn.com

Geschäftsführer
Patrick Bauer, Pascal Bauer
Amtsgericht Coesfeld HRB 5259

TÜVNORD
TÜV NORD CERT GmbH
DIN EN ISO 9001
tuev-nord.de

# Price List 0726 en-DK
# Forklift Truck Attachments

| Silo Container Type SGK | Category | Price | Freight charges | Price including freight charges |
|---|---|---|---|---|
| **SGK 75, hot-dip galvanized** | A | 1251,– | 143,– | 1394,– |
| **SGK 100, painted** | A | 1327,– | 143,– | 1470,– |
| **SGK 100, hot-dip galvanized** | A | 1367,– | 143,– | 1510,– |

| Silo Container Type SGS | Category | Price | Freight charges | Price including freight charges |
|---|---|---|---|---|
| **SGS 50, painted** | A | 885,– | 106,– | 991,– |
| **SGS 50, hot-dip galvanized** | A | 902,– | 143,– | 1045,– |
| **SGS 75, painted** | A | 982,– | 143,– | 1125,– |
| **SGS 75, hot-dip galvanized** | A | 1015,– | 143,– | 1158,– |
| **SGS 100, painted** | A | 1078,– | 143,– | 1221,– |
| **SGS 100, hot-dip galvanized** | A | 1110,– | 143,– | 1253,– |

| Swarf Tilting Container Type SGU | Category | Price | Freight charges | Price including freight charges |
|---|---|---|---|---|
| **SGU 30, painted** | A | 940,– | 143,– | 1083,– |
| Lid, galvanized | A | 98,– | 18,– | 116,– |
| Castor Set, polyamide, Load capacity 1350 kg / castor set | A | 192,– | 15,– | 207,– |
| Crane lifting eyes for use with a crane | A | 106,– | 8,– | 114,– |
| Support legs, 100 mm ground leeway | A | 70,– | 8,– | 78,– |
| **SGU 30, hot-dip galvanized** | A | 1117,– | 143,– | 1260,– |
| Lid, galvanized | A | 98,– | 18,– | 116,– |
| Castor Set, polyamide, Load capacity 1350 kg / castor set | A | 192,– | 15,– | 207,– |
| Crane lifting eyes for use with a crane | A | 106,– | 8,– | 114,– |
| Support legs, 100 mm ground leeway | A | 70,– | 8,– | 78,– |
| **SGU 50, painted** | A | 1163,– | 143,– | 1306,– |
| Lid, galvanized | A | 98,– | 18,– | 116,– |
| Castor Set, polyamide, Load capacity 1350 kg / castor set | A | 192,– | 15,– | 207,– |
| Adjustable dumping brake | A | 464,– | 10,– | 474,– |
| Crane lifting eyes for use with a crane | A | 106,– | 8,– | 114,– |
| Support legs, 100 mm ground leeway | A | 70,– | 8,– | 78,– |
| **SGU 50, hot-dip galvanized** | A | 1407,– | 143,– | 1550,– |
| Lid, galvanized | A | 98,– | 18,– | 116,– |
| Castor Set, polyamide, Load capacity 1350 kg / castor set | A | 192,– | 15,– | 207,– |
| Adjustable dumping brake | A | 464,– | 10,– | 474,– |
| Crane lifting eyes for use with a crane | A | 106,– | 8,– | 114,– |
| Support legs, 100 mm ground leeway | A | 70,– | 8,– | 78,– |
| **SGU 75, painted** | A | 1312,– | 143,– | 1455,– |
| Lid, galvanized | A | 139,– | 26,– | 165,– |
| Castor Set, polyamide, Load capacity 1350 kg / castor set | A | 192,– | 15,– | 207,– |
| Adjustable dumping brake | A | 464,– | 10,– | 474,– |
| Crane lifting eyes for use with a crane | A | 106,– | 8,– | 114,– |
| Support legs, 100 mm ground leeway | A | 70,– | 8,– | 78,– |
| **SGU 75, hot-dip galvanized** | A | 1623,– | 143,– | 1766,– |
| Lid, galvanized | A | 139,– | 26,– | 165,– |
| Castor Set, polyamide, Load capacity 1350 kg / castor set | A | 192,– | 15,– | 207,– |
| Adjustable dumping brake | A | 464,– | 10,– | 474,– |

Prices in EUR, valid EXW DE-46354 Südlohn, DE-38820 Halberstadt, unpacked
Freight charges valid CPT Denmark, islands and oversea territories excluded



BAUER GmbH
Eichendorffstr. 62
46354 Südlohn, Germany

Tel. +49 2862 70 90
info@bauer-suedlohn.com
www.bauer-suedlohn.com

Geschäftsführer
Patrick Bauer, Pascal Bauer
Amtsgericht Coesfeld HRB 5259

TÜVNORD
TÜV NORD CERT GmbH
DIN EN ISO 9001
tuev-nord.de

# Price List 0726 en-DK
# Forklift Truck Attachments

| Swarf Tilting Container Type SGU | Category | Price | Freight charges | Price including freight charges |
|---|---|---|---|---|
| Crane lifting eyes for use with a crane | A | 106,– | 8,– | 114,– |
| Support legs, 100 mm ground leeway | A | 70,– | 8,– | 78,– |
| **SGU 100, painted** | A | 1571,– | 201,– | 1772,– |
| Lid, galvanized | A | 192,– | 27,– | 219,– |
| Castor Set, polyamide, Load capacity 1350 kg / castor set | A | 192,– | 15,– | 207,– |
| Adjustable dumping brake | A | 464,– | 10,– | 474,– |
| Crane lifting eyes for use with a crane | A | 106,– | 8,– | 114,– |
| Support legs, 100 mm ground leeway | A | 70,– | 8,– | 78,– |
| **SGU 100, hot-dip galvanized** | A | 2120,– | 201,– | 2321,– |
| Lid, galvanized | A | 192,– | 27,– | 219,– |
| Castor Set, polyamide, Load capacity 1350 kg / castor set | A | 192,– | 15,– | 207,– |
| Adjustable dumping brake | A | 464,– | 10,– | 474,– |
| Crane lifting eyes for use with a crane | A | 106,– | 8,– | 114,– |
| Support legs, 100 mm ground leeway | A | 70,– | 8,– | 78,– |
| **SGU 150, painted** | A | 1764,– | 201,– | 1965,– |
| Lid, galvanized | A | 192,– | 27,– | 219,– |
| Castor Set, polyamide, Load capacity 1350 kg / castor set | A | 192,– | 15,– | 207,– |
| Adjustable dumping brake | A | 464,– | 10,– | 474,– |
| Crane lifting eyes for use with a crane | A | 106,– | 8,– | 114,– |
| Support legs, 100 mm ground leeway | A | 70,– | 8,– | 78,– |
| **SGU 150, hot-dip galvanized** | A | 2242,– | 201,– | 2443,– |
| Lid, galvanized | A | 192,– | 27,– | 219,– |
| Castor Set, polyamide, Load capacity 1350 kg / castor set | A | 192,– | 15,– | 207,– |
| Adjustable dumping brake | A | 464,– | 10,– | 474,– |
| Crane lifting eyes for use with a crane | A | 106,– | 8,– | 114,– |
| Support legs, 100 mm ground leeway | A | 70,– | 8,– | 78,– |
| **SGU 200, painted** | A | 2215,– | 256,– | 2471,– |
| Lid, galvanized | A | 226,– | 32,– | 258,– |
| Castor Set, polyamide, Load capacity 1350 kg / castor set | A | 192,– | 15,– | 207,– |
| Adjustable dumping brake | A | 464,– | 10,– | 474,– |
| Crane lifting eyes for use with a crane | A | 106,– | 8,– | 114,– |
| Support legs, 100 mm ground leeway | A | 70,– | 8,– | 78,– |
| **SGU 200, hot-dip galvanized** | A | 2779,– | 256,– | 3035,– |
| Castor Set, polyamide, Load capacity 1350 kg / castor set | A | 192,– | 15,– | 207,– |
| Lid, galvanized | A | 226,– | 32,– | 258,– |
| Adjustable dumping brake | A | 464,– | 10,– | 474,– |
| Crane lifting eyes for use with a crane | A | 106,– | 8,– | 114,– |
| Support legs, 100 mm ground leeway | A | 70,– | 8,– | 78,– |

| Swarf Tilting Container Type SGU-RZ | Category | Price | Freight charges | Price including freight charges |
|---|---|---|---|---|
| **SGU-RZ 30, painted** | A | 972,– | 143,– | 1115,– |
| Lid, galvanized | A | 95,– | 18,– | 113,– |
| **SGU-RZ 30, hot-dip galvanized** | A | 1097,– | 143,– | 1240,– |
| Lid, galvanized | A | 95,– | 18,– | 113,– |
| **SGU-RZ 55, painted** | A | 1202,– | 143,– | 1345,– |
| Lid, galvanized | A | 95,– | 18,– | 113,– |

Prices in EUR, valid EXW DE-46354 Südlohn, DE-38820 Halberstadt, unpacked
Freight charges valid CPT Denmark, islands and oversea territories excluded



BAUER GmbH
Eichendorffstr. 62
46354 Südlohn, Germany

Tel. +49 2862 70 90
info@bauer-suedlohn.com
www.bauer-suedlohn.com

Geschäftsführer
Patrick Bauer, Pascal Bauer
Amtsgericht Coesfeld HRB 5259

TÜVNORD
TÜV NORD CERT GmbH
DIN EN ISO 9001
tuev-nord.de

# Price List 0726 en-DK
# Forklift Truck Attachments

| Swarf Tilting Container Type SGU-RZ | Category | Price | Freight charges | Price including freight charges |
|---|---|---|---|---|
| **SGU-RZ 55, hot-dip galvanized** | A | 1314,– | 143,– | 1457,– |
| Lid, galvanized | A | 95,– | 18,– | 113,– |

| Gritter Type SH | Category | Price | Freight charges | Price including freight charges |
|---|---|---|---|---|
| **SH, painted** | A | 3569,– | 143,– | 3712,– |
| Tarpaulin | A | 122,– | 10,– | 132,– |

| Forklift Safety Cage Type SIKO | Category | Price | Freight charges | Price including freight charges |
|---|---|---|---|---|
| **SIKO, painted** | A | 726,– | 143,– | 869,– |
| Castor Set, polyamide, Load capacity 1050 kg / castor set | A | 136,– | 15,– | 151,– |

| Forklift Safety Cage Type SIKO/L | Category | Price | Freight charges | Price including freight charges |
|---|---|---|---|---|
| **SIKO/L, painted** | A | 878,– | 143,– | 1021,– |
| Castor Set, polyamide, Load capacity 1050 kg / castor set | A | 136,– | 15,– | 151,– |

| Forklift Safety Cage Type SIKO-G | Category | Price | Freight charges | Price including freight charges |
|---|---|---|---|---|
| **SIKO-G, painted** | A | 657,– | 106,– | 763,– |

| Forklift Safety Cage Type SIKO-M | Category | Price | Freight charges | Price including freight charges |
|---|---|---|---|---|
| **SIKO-M, painted** | A | 529,– | 106,– | 635,– |

| Heavy Duty Tilting Container Type SK | Category | Price | Freight charges | Price including freight charges |
|---|---|---|---|---|
| **SK 300, painted** | A | 1281,– | 201,– | 1482,– |
| Lid, galvanized | A | 174,– | 18,– | 192,– |
| Heavy-duty Castor Set, polyamide, Load capacity 2550 kg / castor set | A | 379,– | 15,– | 394,– |
| Skip Body Welded Oil and Watertight | A | 78,– | 0,– | 78,– |
| **SK 300, hot-dip galvanized** | A | 1555,– | 201,– | 1756,– |
| Lid, galvanized | A | 174,– | 18,– | 192,– |
| Heavy-duty Castor Set, polyamide, Load capacity 2550 kg / castor set | A | 379,– | 15,– | 394,– |
| Skip Body Welded Oil and Watertight | A | 78,– | 0,– | 78,– |
| **SK 600, painted** | A | 1386,– | 201,– | 1587,– |
| Lid, galvanized | A | 196,– | 22,– | 218,– |
| Heavy-duty Castor Set, polyamide, Load capacity 2550 kg / castor set | A | 379,– | 15,– | 394,– |
| Skip Body Welded Oil and Watertight | A | 78,– | 0,– | 78,– |
| **SK 600, hot-dip galvanized** | A | 1724,– | 256,– | 1980,– |
| Lid, galvanized | A | 196,– | 22,– | 218,– |
| Heavy-duty Castor Set, polyamide, Load capacity 2550 kg / castor set | A | 379,– | 15,– | 394,– |
| Skip Body Welded Oil and Watertight | A | 78,– | 0,– | 78,– |
| **SK 900, painted** | A | 1510,– | 256,– | 1766,– |
| Lid, galvanized | A | 223,– | 27,– | 250,– |
| Heavy-duty Castor Set, polyamide, Load capacity 2550 kg / castor set | A | 379,– | 15,– | 394,– |
| Skip Body Welded Oil and Watertight | A | 78,– | 0,– | 78,– |
| **SK 900, hot-dip galvanized** | A | 1941,– | 256,– | 2197,– |
| Lid, galvanized | A | 223,– | 27,– | 250,– |
| Heavy-duty Castor Set, polyamide, Load capacity 2550 kg / castor set | A | 379,– | 15,– | 394,– |

Prices in EUR, valid EXW DE-46354 Südlohn, DE-38820 Halberstadt, unpacked
Freight charges valid CPT Denmark, islands and oversea territories excluded



BAUER GmbH
Eichendorffstr. 62
46354 Südlohn, Germany

Tel. +49 2862 70 90
info@bauer-suedlohn.com
www.bauer-suedlohn.com

Geschäftsführer
Patrick Bauer, Pascal Bauer
Amtsgericht Coesfeld HRB 5259

TÜVNORD
TÜV NORD CERT GmbH
DIN EN ISO 9001
tuev-nord.de

# Price List 0726 en-DK
# Forklift Truck Attachments

| Heavy Duty Tilting Container Type SK | Category | Price | Freight charges | Price including freight charges |
|---|---|---|---|---|
| Skip Body Welded Oil and Watertight | A | 78,– | 0,– | 78,– |
| **SK 1200, painted** | A | 1770,– | 256,– | 2026,– |
| Lid, galvanized | A | 223,– | 26,– | 249,– |
| Heavy-duty Castor Set, polyamide, Load capacity 2550 kg / castor set | A | 379,– | 15,– | 394,– |
| Skip Body Welded Oil and Watertight | A | 121,– | 0,– | 121,– |
| **SK 1200, hot-dip galvanized** | A | 2277,– | 335,– | 2612,– |
| Lid, galvanized | A | 223,– | 26,– | 249,– |
| Heavy-duty Castor Set, polyamide, Load capacity 2550 kg / castor set | A | 379,– | 15,– | 394,– |
| Skip Body Welded Oil and Watertight | A | 121,– | 0,– | 121,– |
| **SK 1700, painted** | A | 1862,– | 335,– | 2197,– |
| Lid, galvanized | A | 276,– | 33,– | 309,– |
| Heavy-duty Castor Set, polyamide, Load capacity 2550 kg / castor set | A | 379,– | 15,– | 394,– |
| Skip Body Welded Oil and Watertight | A | 121,– | 0,– | 121,– |
| **SK 1700, hot-dip galvanized** | A | 2492,– | 335,– | 2827,– |
| Lid, galvanized | A | 276,– | 33,– | 309,– |
| Heavy-duty Castor Set, polyamide, Load capacity 2550 kg / castor set | A | 379,– | 15,– | 394,– |
| Skip Body Welded Oil and Watertight | A | 121,– | 0,– | 121,– |
| **SK 2100, painted** | A | 2032,– | 335,– | 2367,– |
| Lid, galvanized | A | 360,– | 36,– | 396,– |
| Heavy-duty Castor Set, polyamide, Load capacity 2550 kg / castor set | A | 379,– | 15,– | 394,– |
| Skip Body Welded Oil and Watertight | A | 121,– | 0,– | 121,– |
| **SK 2100, hot-dip galvanized** | A | 2739,– | 335,– | 3074,– |
| Lid, galvanized | A | 360,– | 36,– | 396,– |
| Heavy-duty Castor Set, polyamide, Load capacity 2550 kg / castor set | A | 379,– | 15,– | 394,– |
| Skip Body Welded Oil and Watertight | A | 121,– | 0,– | 121,– |

| Broom Type SKB | Category | Price | Freight charges | Price including freight charges |
|---|---|---|---|---|
| **SKB 100, painted** | A | 958,– | 106,– | 1064,– |
| **SKB 150, painted** | A | 1197,– | 106,– | 1303,– |
| **SKB 200, painted** | A | 1475,– | 106,– | 1581,– |

| Broom Type SKB-O | Category | Price | Freight charges | Price including freight charges |
|---|---|---|---|---|
| **SKB-O 100, painted** | A | 658,– | 106,– | 764,– |
| **SKB-O 150, painted** | A | 898,– | 106,– | 1004,– |
| **SKB-O 200, painted** | A | 1176,– | 106,– | 1282,– |

| Swarf Tipping Skip Type SKK | Category | Price | Freight charges | Price including freight charges |
|---|---|---|---|---|
| **SKK 250, painted** | E | 534,– | 106,– | 640,– |
| Lid, galvanized | E | 136,– | 15,– | 151,– |
| Castor Set, polyamide, Load capacity 1050 kg / castor set | A | 136,– | 15,– | 151,– |
| Castor Set, solid rubber, Load capacity 615 kg / castor set | E | 103,– | 15,– | 118,– |
| **SKK 250, hot-dip galvanized** | E | 583,– | 106,– | 689,– |
| Lid, galvanized | E | 136,– | 15,– | 151,– |
| Castor Set, polyamide, Load capacity 1050 kg / castor set | A | 136,– | 15,– | 151,– |
| Castor Set, solid rubber, Load capacity 615 kg / castor set | E | 103,– | 15,– | 118,– |

Prices in EUR, valid EXW DE-46354 Südlohn, DE-38820 Halberstadt, unpacked
Freight charges valid CPT Denmark, islands and oversea territories excluded



BAUER GmbH
Eichendorffstr. 62
46354 Südlohn, Germany

Tel. +49 2862 70 90
info@bauer-suedlohn.com
www.bauer-suedlohn.com

Geschäftsführer
Patrick Bauer, Pascal Bauer
Amtsgericht Coesfeld HRB 5259

TÜVNORD
TÜV NORD CERT GmbH
DIN EN ISO 9001
tuev-nord.de

# Price List 0726 en-DK
# Forklift Truck Attachments

| Swarf Tipping Skip Type SKK | Category | Price | Freight charges | Price including freight charges |
|---|---|---|---|---|
| **SKK 400, painted** | E | 600,– | 106,– | 706,– |
| Lid, galvanized | E | 156,– | 16,– | 172,– |
| Castor Set, polyamide, Load capacity 1050 kg / castor set | A | 136,– | 15,– | 151,– |
| Castor Set, solid rubber, Load capacity 615 kg / castor set | E | 103,– | 15,– | 118,– |
| **SKK 400, hot-dip galvanized** | E | 649,– | 106,– | 755,– |
| Lid, galvanized | E | 156,– | 16,– | 172,– |
| Castor Set, polyamide, Load capacity 1050 kg / castor set | A | 136,– | 15,– | 151,– |
| Castor Set, solid rubber, Load capacity 615 kg / castor set | E | 103,– | 15,– | 118,– |
| **SKK 600, painted** | E | 815,– | 143,– | 958,– |
| Lid, galvanized | E | 173,– | 20,– | 193,– |
| Castor Set, polyamide, Load capacity 1050 kg / castor set | A | 136,– | 15,– | 151,– |
| Castor Set, solid rubber, Load capacity 615 kg / castor set | E | 103,– | 15,– | 118,– |
| **SKK 600, hot-dip galvanized** | E | 914,– | 143,– | 1057,– |
| Lid, galvanized | E | 173,– | 20,– | 193,– |
| Castor Set, polyamide, Load capacity 1050 kg / castor set | A | 136,– | 15,– | 151,– |
| Castor Set, solid rubber, Load capacity 615 kg / castor set | E | 103,– | 15,– | 118,– |
| **SKK 800, painted** | E | 872,– | 143,– | 1015,– |
| Lid, galvanized | E | 181,– | 21,– | 202,– |
| Castor Set, polyamide, Load capacity 1050 kg / castor set | A | 136,– | 15,– | 151,– |
| Castor Set, solid rubber, Load capacity 615 kg / castor set | E | 103,– | 15,– | 118,– |
| **SKK 800, hot-dip galvanized** | E | 980,– | 143,– | 1123,– |
| Lid, galvanized | E | 181,– | 21,– | 202,– |
| Castor Set, polyamide, Load capacity 1050 kg / castor set | A | 136,– | 15,– | 151,– |
| Castor Set, solid rubber, Load capacity 615 kg / castor set | E | 103,– | 15,– | 118,– |
| **SKK 1000, painted** | E | 930,– | 143,– | 1073,– |
| Lid, galvanized | E | 193,– | 22,– | 215,– |
| Castor Set, polyamide, Load capacity 1050 kg / castor set | A | 136,– | 15,– | 151,– |
| Castor Set, solid rubber, Load capacity 615 kg / castor set | E | 103,– | 15,– | 118,– |
| **SKK 1000, hot-dip galvanized** | E | 1063,– | 143,– | 1206,– |
| Lid, galvanized | E | 193,– | 22,– | 215,– |
| Castor Set, polyamide, Load capacity 1050 kg / castor set | A | 136,– | 15,– | 151,– |
| Castor Set, solid rubber, Load capacity 615 kg / castor set | E | 103,– | 15,– | 118,– |

| Swarf Tilting Container Type SKM | Category | Price | Freight charges | Price including freight charges |
|---|---|---|---|---|
| **SKM 30, painted** | A | 950,– | 143,– | 1093,– |
| Lid, galvanized | A | 104,– | 18,– | 122,– |
| **SKM 30, hot-dip galvanized** | A | 1148,– | 143,– | 1291,– |
| Lid, galvanized | A | 104,– | 18,– | 122,– |
| **SKM 50, painted** | A | 1220,– | 143,– | 1363,– |
| Lid, galvanized | A | 158,– | 28,– | 186,– |
| **SKM 50, hot-dip galvanized** | A | 1478,– | 143,– | 1621,– |
| Lid, galvanized | A | 158,– | 28,– | 186,– |
| **SKM 75, painted** | A | 1469,– | 143,– | 1612,– |
| Lid, galvanized | A | 175,– | 33,– | 208,– |
| **SKM 75, hot-dip galvanized** | A | 1790,– | 201,– | 1991,– |
| Lid, galvanized | A | 175,– | 33,– | 208,– |

Prices in EUR, valid EXW DE-46354 Südlohn, DE-38820 Halberstadt, unpacked
Freight charges valid CPT Denmark, islands and oversea territories excluded



BAUER GmbH
Eichendorffstr. 62
46354 Südlohn, Germany

Tel. +49 2862 70 90
info@bauer-suedlohn.com
www.bauer-suedlohn.com

Geschäftsführer
Patrick Bauer, Pascal Bauer
Amtsgericht Coesfeld HRB 5259

TÜVNORD
TÜV NORD CERT GmbH
DIN EN ISO 9001
tuev-nord.de

# Price List 0726 en-DK
# Forklift Truck Attachments

| Swarf Tipping Skip Type SKN | Category | Price | Freight charges | Price including freight charges |
|---|---|---|---|---|
| **SKN 250, painted** | E | 534,– | 106,– | 640,– |
| Lid, galvanized | E | 136,– | 15,– | 151,– |
| Castor Set, polyamide, Load capacity 1050 kg / castor set | A | 136,– | 15,– | 151,– |
| Castor Set, solid rubber, Load capacity 615 kg / castor set | E | 103,– | 15,– | 118,– |
| **SKN 250, hot-dip galvanized** | E | 583,– | 106,– | 689,– |
| Lid, galvanized | E | 136,– | 15,– | 151,– |
| Castor Set, polyamide, Load capacity 1050 kg / castor set | A | 136,– | 15,– | 151,– |
| Castor Set, solid rubber, Load capacity 615 kg / castor set | E | 103,– | 15,– | 118,– |
| **SKN 400, painted** | E | 600,– | 106,– | 706,– |
| Lid, galvanized | E | 156,– | 16,– | 172,– |
| Castor Set, polyamide, Load capacity 1050 kg / castor set | A | 136,– | 15,– | 151,– |
| Castor Set, solid rubber, Load capacity 615 kg / castor set | E | 103,– | 15,– | 118,– |
| **SKN 400, hot-dip galvanized** | E | 649,– | 106,– | 755,– |
| Lid, galvanized | E | 156,– | 16,– | 172,– |
| Castor Set, polyamide, Load capacity 1050 kg / castor set | A | 136,– | 15,– | 151,– |
| Castor Set, solid rubber, Load capacity 615 kg / castor set | E | 103,– | 15,– | 118,– |

| Swarf Tipping Skip Type SKS | Category | Price | Freight charges | Price including freight charges |
|---|---|---|---|---|
| **SKS 400, painted** | E | 946,– | 143,– | 1089,– |
| **SKS 550, painted** | E | 1013,– | 143,– | 1156,– |
| **SKS 700, painted** | E | 1072,– | 143,– | 1215,– |

| Swarf Barrow Tipper Type SKW-ET | Category | Price | Freight charges | Price including freight charges |
|---|---|---|---|---|
| **SKW-ET 250, painted** | E | 638,– | 106,– | 744,– |
| Lid, galvanized | E | 136,– | 15,– | 151,– |
| **SKW-ET 250, hot-dip galvanized** | E | 975,– | 106,– | 1081,– |
| Lid, galvanized | E | 136,– | 15,– | 151,– |
| **SKW-ET 400, painted** | E | 697,– | 106,– | 803,– |
| Lid, galvanized | E | 156,– | 16,– | 172,– |
| **SKW-ET 400, hot-dip galvanized** | E | 1071,– | 106,– | 1177,– |
| Lid, galvanized | E | 156,– | 16,– | 172,– |
| **SKW-ET 600, painted** | E | 851,– | 143,– | 994,– |
| Lid, galvanized | E | 173,– | 20,– | 193,– |
| **SKW-ET 600, hot-dip galvanized** | E | 1233,– | 143,– | 1376,– |
| Lid, galvanized | E | 173,– | 20,– | 193,– |
| **SKW-ET 1000, painted** | E | 1032,– | 143,– | 1175,– |
| Lid, galvanized | E | 193,– | 22,– | 215,– |
| **SKW-ET 1000, hot-dip galvanized** | E | 1643,– | 143,– | 1786,– |
| Lid, galvanized | E | 193,– | 22,– | 215,– |

| Mini Swarf Tilting Container Type SMGU | Category | Price | Freight charges | Price including freight charges |
|---|---|---|---|---|
| **SMGU 230, painted** | A | 689,– | 106,– | 795,– |
| Lid, galvanized | A | 131,– | 18,– | 149,– |
| Castor Set, polyamide, Load capacity 1050 kg / castor set | A | 156,– | 15,– | 171,– |
| **SMGU 230, hot-dip galvanized** | A | 775,– | 143,– | 918,– |

Prices in EUR, valid EXW DE-46354 Südlohn, DE-38820 Halberstadt, unpacked
Freight charges valid CPT Denmark, islands and oversea territories excluded



BAUER GmbH
Eichendorffstr. 62
46354 Südlohn, Germany

Tel. +49 2862 70 90
info@bauer-suedlohn.com
www.bauer-suedlohn.com

Geschäftsführer
Patrick Bauer, Pascal Bauer
Amtsgericht Coesfeld HRB 5259

TÜVNORD
TÜV NORD CERT GmbH
DIN EN ISO 9001
tuev-nord.de

# Price List 0726 en-DK
# Forklift Truck Attachments

| Mini Swarf Tilting Container Type SMGU | Category | Price | Freight charges | Price including freight charges |
|---|---|---|---|---|
| Lid, galvanized | A | 131,– | 18,– | 149,– |
| Castor Set, polyamide, Load capacity 1050 kg / castor set | A | 156,– | 15,– | 171,– |
| **SMGU 270, painted** | A | 744,– | 143,– | 887,– |
| Lid, galvanized | A | 131,– | 18,– | 149,– |
| Castor Set, polyamide, Load capacity 1050 kg / castor set | A | 156,– | 15,– | 171,– |
| **SMGU 270, hot-dip galvanized** | A | 850,– | 143,– | 993,– |
| Lid, galvanized | A | 131,– | 18,– | 149,– |
| Castor Set, polyamide, Load capacity 1050 kg / castor set | A | 156,– | 15,– | 171,– |
| **SMGU 460, painted** | A | 935,– | 143,– | 1078,– |
| Lid, galvanized | A | 169,– | 22,– | 191,– |
| Castor Set, polyamide, Load capacity 1050 kg / castor set | A | 156,– | 15,– | 171,– |
| **SMGU 460, hot-dip galvanized** | A | 1088,– | 143,– | 1231,– |
| Lid, galvanized | A | 169,– | 22,– | 191,– |
| Castor Set, polyamide, Load capacity 1050 kg / castor set | A | 156,– | 15,– | 171,– |
| **SMGU 610, painted** | A | 1041,– | 143,– | 1184,– |
| Lid, galvanized | A | 181,– | 26,– | 207,– |
| Castor Set, polyamide, Load capacity 1050 kg / castor set | A | 156,– | 15,– | 171,– |
| **SMGU 610, hot-dip galvanized** | A | 1209,– | 143,– | 1352,– |
| Lid, galvanized | A | 181,– | 26,– | 207,– |
| Castor Set, polyamide, Load capacity 1050 kg / castor set | A | 156,– | 15,– | 171,– |

| Silo Container Type SR | Category | Price | Freight charges | Price including freight charges |
|---|---|---|---|---|
| **SR 375, painted** | E | 844,– | 106,– | 950,– |
| Lid, galvanized | E | 131,– | 33,– | 164,– |
| **SR 375, hot-dip galvanized** | E | 1584,– | 106,– | 1690,– |
| Lid, galvanized | E | 131,– | 33,– | 164,– |
| **SR 600, painted** | E | 1048,– | 143,– | 1191,– |
| Lid, galvanized | E | 131,– | 33,– | 164,– |
| **SR 600, hot-dip galvanized** | E | 1801,– | 143,– | 1944,– |
| Lid, galvanized | E | 131,– | 33,– | 164,– |

| Silo Container Type SR-D | Category | Price | Freight charges | Price including freight charges |
|---|---|---|---|---|
| **SR-D 375, painted** | E | 844,– | 106,– | 950,– |
| Lid, galvanized | E | 131,– | 33,– | 164,– |
| **SR-D 375, hot-dip galvanized** | E | 1584,– | 106,– | 1690,– |
| Lid, galvanized | E | 131,– | 33,– | 164,– |
| **SR-D 600, painted** | E | 1048,– | 143,– | 1191,– |
| Lid, galvanized | E | 131,– | 33,– | 164,– |
| **SR-D 600, hot-dip galvanized** | E | 1801,– | 143,– | 1944,– |
| Lid, galvanized | E | 131,– | 33,– | 164,– |

| Silo Container Type SRE | Category | Price | Freight charges | Price including freight charges |
|---|---|---|---|---|
| **SRE 375, painted** | E | 962,– | 143,– | 1105,– |
| Lid, galvanized | E | 131,– | 33,– | 164,– |
| **SRE 375, hot-dip galvanized** | E | 1723,– | 143,– | 1866,– |

Prices in EUR, valid EXW DE-46354 Südlohn, DE-38820 Halberstadt, unpacked
Freight charges valid CPT Denmark, islands and oversea territories excluded



BAUER GmbH
Eichendorffstr. 62
46354 Südlohn, Germany

Tel. +49 2862 70 90
info@bauer-suedlohn.com
www.bauer-suedlohn.com

Geschäftsführer
Patrick Bauer, Pascal Bauer
Amtsgericht Coesfeld HRB 5259

TÜVNORD
TÜV NORD CERT GmbH
DIN EN ISO 9001
tuev-nord.de

# Price List 0726 en-DK
# Forklift Truck Attachments

| Silo Container Type SRE | Category | Price | Freight charges | Price including freight charges |
|---|---|---|---|---|
| Lid, galvanized | E | 131,– | 33,– | 164,– |
| **SRE 600, painted** | E | 1171,– | 143,– | 1314,– |
| Lid, galvanized | E | 131,– | 33,– | 164,– |
| **SRE 600, hot-dip galvanized** | E | 1857,– | 143,– | 2000,– |
| Lid, galvanized | E | 131,– | 33,– | 164,– |

| Silo Container Type SRE-D | Category | Price | Freight charges | Price including freight charges |
|---|---|---|---|---|
| **SRE-D 375, painted** | E | 962,– | 106,– | 1068,– |
| Lid, galvanized | E | 131,– | 33,– | 164,– |
| **SRE-D 375, hot-dip galvanized** | E | 1723,– | 143,– | 1866,– |
| Lid, galvanized | E | 131,– | 33,– | 164,– |
| **SRE-D 600, painted** | E | 1171,– | 143,– | 1314,– |
| Lid, galvanized | E | 131,– | 33,– | 164,– |
| **SRE-D 600, hot-dip galvanized** | E | 1857,– | 143,– | 2000,– |
| Lid, galvanized | E | 131,– | 33,– | 164,– |

| Forklift Tender System Type STS | Category | Price | Freight charges | Price including freight charges |
|---|---|---|---|---|
| **STS 2,5, painted** | C | 3857,– | on request | on request |
| **STS 5,0, painted** | C | 4546,– | on request | on request |

| Spreader Type STW | Category | Price | Freight charges | Price including freight charges |
|---|---|---|---|---|
| **STW 100, painted** | A | 1216,– | 106,– | 1322,– |
| Tarpaulin | A | 116,– | 10,– | 126,– |
| **STW 260, painted** | A | 2147,– | 106,– | 2253,– |
| Tarpaulin | A | 122,– | 10,– | 132,– |

| Traverse for Big Bags Type TBB | Category | Price | Freight charges | Price including freight charges |
|---|---|---|---|---|
| **TBB, painted** | A | 901,– | 106,– | 1007,– |

| Traverse For Big Bags Type TBB-E | Category | Price | Freight charges | Price including freight charges |
|---|---|---|---|---|
| **TBB-E, painted** | A | 852,– | 106,– | 958,– |

| Traverse For Big Bags Type TBB-W | Category | Price | Freight charges | Price including freight charges |
|---|---|---|---|---|
| **TBB-W, painted** | A | 1093,– | 106,– | 1199,– |

| Mini Lifting Beam Type TM | Category | Price | Freight charges | Price including freight charges |
|---|---|---|---|---|
| **TM 200-500, hot-dip galvanized** | F | 399,– | 32,– | 431,– |
| **TM 400-800, hot-dip galvanized** | F | 429,– | 32,– | 461,– |
| **TM 800-1200, hot-dip galvanized** | F | 566,– | 32,– | 598,– |

| Tilting Container Type TRIO | Category | Price | Freight charges | Price including freight charges |
|---|---|---|---|---|
| **TRIO, painted** | A | 2333,– | 256,– | 2589,– |
| Lid, galvanized | A | 215,– | 26,– | 241,– |
| Castor Set, polyamide, Load capacity 1350 kg / castor set | A | 192,– | 15,– | 207,– |

Prices in EUR, valid EXW DE-46354 Südlohn, DE-38820 Halberstadt, unpacked
Freight charges valid CPT Denmark, islands and oversea territories excluded



BAUER GmbH
Eichendorffstr. 62
46354 Südlohn, Germany

Tel. +49 2862 70 90
info@bauer-suedlohn.com
www.bauer-suedlohn.com

Geschäftsführer
Patrick Bauer, Pascal Bauer
Amtsgericht Coesfeld HRB 5259

TÜVNORD
TÜV NORD CERT GmbH
DIN EN ISO 9001
tuev-nord.de

# Price List 0726 en-DK
# Forklift Truck Attachments

| Tilting Container Type TRIO | Category | Price | Freight charges | Price including freight charges |
|---|---|---|---|---|
| Set of 5 self-adhesive stickers with symbols for: glass, paper, plastic, metal, residual waste | A | 29,– | on request | on request |

| Universal Container Type UC | Category | Price | Freight charges | Price including freight charges |
|---|---|---|---|---|
| **UC 500, painted** | A | 675,– | 106,– | 781,– |
| Lid, galvanized | A | 168,– | 16,– | 184,– |
| Castor Set, polyamide, Load capacity 1350 kg / castor set | A | 192,– | 15,– | 207,– |
| Pick-up Profile on Type UC for Traverse Type UCT | A | 106,– | 0,– | 106,– |
| **UC 500, hot-dip galvanized** | A | 771,– | 143,– | 914,– |
| Lid, galvanized | A | 168,– | 16,– | 184,– |
| Castor Set, polyamide, Load capacity 1350 kg / castor set | A | 192,– | 15,– | 207,– |
| Pick-up Profile on Type UC for Traverse Type UCT | A | 106,– | 0,– | 106,– |
| **UC 750, painted** | A | 734,– | 143,– | 877,– |
| Lid, galvanized | A | 168,– | 16,– | 184,– |
| Castor Set, polyamide, Load capacity 1350 kg / castor set | A | 192,– | 15,– | 207,– |
| Pick-up Profile on Type UC for Traverse Type UCT | A | 106,– | 0,– | 106,– |
| **UC 750, hot-dip galvanized** | A | 853,– | 143,– | 996,– |
| Lid, galvanized | A | 168,– | 16,– | 184,– |
| Castor Set, polyamide, Load capacity 1350 kg / castor set | A | 192,– | 15,– | 207,– |
| Pick-up Profile on Type UC for Traverse Type UCT | A | 106,– | 0,– | 106,– |
| **UC 1000, painted** | A | 771,– | 143,– | 914,– |
| Lid, galvanized | A | 168,– | 16,– | 184,– |
| Castor Set, polyamide, Load capacity 1350 kg / castor set | A | 192,– | 15,– | 207,– |
| Pick-up Profile on Type UC for Traverse Type UCT | A | 106,– | 0,– | 106,– |
| **UC 1000, hot-dip galvanized** | A | 894,– | 143,– | 1037,– |
| Lid, galvanized | A | 168,– | 16,– | 184,– |
| Castor Set, polyamide, Load capacity 1350 kg / castor set | A | 192,– | 15,– | 207,– |
| Pick-up Profile on Type UC for Traverse Type UCT | A | 106,– | 0,– | 106,– |

| Hydraulic Traverse Type UCT | Category | Price | Freight charges | Price including freight charges |
|---|---|---|---|---|
| **UCT, painted** | A | 2737,– | 201,– | 2938,– |

| Tilting Container Type VD | Category | Price | Freight charges | Price including freight charges |
|---|---|---|---|---|
| **VD 500, painted** | A | 794,– | 143,– | 937,– |
| Lid, galvanized | A | 144,– | 18,– | 162,– |
| Castor Set, polyamide, Load capacity 1350 kg / castor set | A | 192,– | 15,– | 207,– |
| Skip Body Welded Oil and Watertight | A | 78,– | 0,– | 78,– |
| **VD 500, hot-dip galvanized** | A | 1033,– | 143,– | 1176,– |
| Lid, galvanized | A | 144,– | 18,– | 162,– |
| Castor Set, polyamide, Load capacity 1350 kg / castor set | A | 192,– | 15,– | 207,– |
| Skip Body Welded Oil and Watertight | A | 78,– | 0,– | 78,– |
| **VD 650, painted** | A | 868,– | 143,– | 1011,– |
| Lid, galvanized | A | 144,– | 18,– | 162,– |
| Castor Set, polyamide, Load capacity 1350 kg / castor set | A | 192,– | 15,– | 207,– |
| Skip Body Welded Oil and Watertight | A | 78,– | 0,– | 78,– |
| **VD 650, hot-dip galvanized** | A | 1130,– | 143,– | 1273,– |

Prices in EUR, valid EXW DE-46354 Südlohn, DE-38820 Halberstadt, unpacked
Freight charges valid CPT Denmark, islands and oversea territories excluded



BAUER GmbH
Eichendorffstr. 62
46354 Südlohn, Germany

Tel. +49 2862 70 90
info@bauer-suedlohn.com
www.bauer-suedlohn.com

Geschäftsführer
Patrick Bauer, Pascal Bauer
Amtsgericht Coesfeld HRB 5259

TÜVNORD
TÜV NORD CERT GmbH
DIN EN ISO 9001
tuev-nord.de

# Price List 0726 en-DK
# Forklift Truck Attachments

| Tilting Container Type VD | Category | Price | Freight charges | Price including freight charges |
|---|---|---|---|---|
| Lid, galvanized | A | 144,– | 18,– | 162,– |
| Castor Set, polyamide, Load capacity 1350 kg / castor set | A | 192,– | 15,– | 207,– |
| Skip Body Welded Oil and Watertight | A | 78,– | 0,– | 78,– |
| **VD 800, painted** | A | 991,– | 143,– | 1134,– |
| Lid, galvanized | A | 174,– | 22,– | 196,– |
| Castor Set, polyamide, Load capacity 1350 kg / castor set | A | 192,– | 15,– | 207,– |
| Skip Body Welded Oil and Watertight | A | 78,– | 0,– | 78,– |
| **VD 800, hot-dip galvanized** | A | 1346,– | 143,– | 1489,– |
| Lid, galvanized | A | 174,– | 22,– | 196,– |
| Castor Set, polyamide, Load capacity 1350 kg / castor set | A | 192,– | 15,– | 207,– |
| Skip Body Welded Oil and Watertight | A | 78,– | 0,– | 78,– |
| **VD 1000, painted** | A | 1041,– | 143,– | 1184,– |
| Lid, galvanized | A | 174,– | 22,– | 196,– |
| Castor Set, polyamide, Load capacity 1350 kg / castor set | A | 192,– | 15,– | 207,– |
| Skip Body Welded Oil and Watertight | A | 121,– | 0,– | 121,– |
| **VD 1000, hot-dip galvanized** | A | 1469,– | 143,– | 1612,– |
| Lid, galvanized | A | 174,– | 22,– | 196,– |
| Castor Set, polyamide, Load capacity 1350 kg / castor set | A | 192,– | 15,– | 207,– |
| Skip Body Welded Oil and Watertight | A | 121,– | 0,– | 121,– |

| Tilting Container Type VG | Category | Price | Freight charges | Price including freight charges |
|---|---|---|---|---|
| **VG 550, painted** | A | 812,– | 143,– | 955,– |
| Lid, galvanized | A | 144,– | 18,– | 162,– |
| Castor Set, polyamide, Load capacity 1350 kg / castor set | A | 192,– | 15,– | 207,– |
| Skip Body Welded Oil and Watertight | A | 78,– | 0,– | 78,– |
| **VG 550, hot-dip galvanized** | A | 1058,– | 143,– | 1201,– |
| Lid, galvanized | A | 144,– | 18,– | 162,– |
| Castor Set, polyamide, Load capacity 1350 kg / castor set | A | 192,– | 15,– | 207,– |
| Skip Body Welded Oil and Watertight | A | 78,– | 0,– | 78,– |
| **VG 700, painted** | A | 962,– | 143,– | 1105,– |
| Lid, galvanized | A | 144,– | 18,– | 162,– |
| Castor Set, polyamide, Load capacity 1350 kg / castor set | A | 192,– | 15,– | 207,– |
| Skip Body Welded Oil and Watertight | A | 78,– | 0,– | 78,– |
| **VG 700, hot-dip galvanized** | A | 1252,– | 143,– | 1395,– |
| Lid, galvanized | A | 144,– | 18,– | 162,– |
| Castor Set, polyamide, Load capacity 1350 kg / castor set | A | 192,– | 15,– | 207,– |
| Skip Body Welded Oil and Watertight | A | 78,– | 0,– | 78,– |
| **VG 900, painted** | A | 1060,– | 143,– | 1203,– |
| Lid, galvanized | A | 174,– | 22,– | 196,– |
| Castor Set, polyamide, Load capacity 1350 kg / castor set | A | 192,– | 15,– | 207,– |
| Skip Body Welded Oil and Watertight | A | 78,– | 0,– | 78,– |
| **VG 900, hot-dip galvanized** | A | 1502,– | 143,– | 1645,– |
| Lid, galvanized | A | 174,– | 22,– | 196,– |
| Castor Set, polyamide, Load capacity 1350 kg / castor set | A | 192,– | 15,– | 207,– |
| Skip Body Welded Oil and Watertight | A | 78,– | 0,– | 78,– |
| **VG 1100, painted** | A | 1150,– | 143,– | 1293,– |

Prices in EUR, valid EXW DE-46354 Südlohn, DE-38820 Halberstadt, unpacked
Freight charges valid CPT Denmark, islands and oversea territories excluded



BAUER GmbH
Eichendorffstr. 62
46354 Südlohn, Germany

Tel. +49 2862 70 90
info@bauer-suedlohn.com
www.bauer-suedlohn.com

Geschäftsführer
Patrick Bauer, Pascal Bauer
Amtsgericht Coesfeld HRB 5259

TÜVNORD
TÜV NORD CERT GmbH
DIN EN ISO 9001
tuev-nord.de

# Price List 0726 en-DK
# Forklift Truck Attachments

| Tilting Container Type VG | Category | Price | Freight charges | Price including freight charges |
|---|---|---|---|---|
| Lid, galvanized | A | 174,– | 22,– | 196,– |
| Castor Set, polyamide, Load capacity 1350 kg / castor set | A | 192,– | 15,– | 207,– |
| Skip Body Welded Oil and Watertight | A | 121,– | 0,– | 121,– |
| **VG 1100, hot-dip galvanized** | A | 1561,– | 143,– | 1704,– |
| Lid, galvanized | A | 174,– | 22,– | 196,– |
| Castor Set, polyamide, Load capacity 1350 kg / castor set | A | 192,– | 15,– | 207,– |
| Skip Body Welded Oil and Watertight | A | 121,– | 0,– | 121,– |

Prices in EUR, valid EXW DE-46354 Südlohn, DE-38820 Halberstadt, unpacked
Freight charges valid CPT Denmark, islands and oversea territories excluded



BAUER GmbH
Eichendorffstr. 62
46354 Südlohn, Germany

Tel. +49 2862 70 90
info@bauer-suedlohn.com
www.bauer-suedlohn.com

Geschäftsführer
Patrick Bauer, Pascal Bauer
Amtsgericht Coesfeld HRB 5259

TÜVNORD
TÜV NORD CERT GmbH
DIN EN ISO 9001
tuev-nord.de

# Price List 0726 en-DK
# Workspace Material Handling

| Battery Charging Station Type BL | Category | Price | Freight charges | Price including freight charges |
|---|---|---|---|---|
| **BL 1, painted** | A | 1422,– | 106,– | 1528,– |
| Fire Extinguisher | A | 204,– | 14,– | 218,– |
| Storage tray for water receptacle, painted | A | 64,– | 13,– | 77,– |
| **BL 2, painted** | A | 1798,– | 106,– | 1904,– |
| Fire Extinguisher | A | 204,– | 14,– | 218,– |
| Storage tray for water receptacle, painted | A | 64,– | 13,– | 77,– |
| **BL 3, painted** | A | 1798,– | 106,– | 1904,– |
| Fire Extinguisher | A | 204,– | 14,– | 218,– |
| Storage tray for water receptacle, painted | A | 64,– | 13,– | 77,– |

| Drum Jack Roller Type FHR | Category | Price | Freight charges | Price including freight charges |
|---|---|---|---|---|
| **FHR 600 F, painted** | B | 3286,– | 201,– | 3487,– |
| **FHR 600 F, hot-dip galvanized** | B | 3641,– | 201,– | 3842,– |
| **FHR 600 G, painted** | B | 2617,– | 143,– | 2760,– |
| **FHR 600 G, hot-dip galvanized** | B | 2888,– | 143,– | 3031,– |
| **FHR 600 K, painted** | B | 2617,– | 143,– | 2760,– |
| **FHR 600 K, hot-dip galvanized** | B | 2888,– | 143,– | 3031,– |

| Drum Trolley Type FP-L | Category | Price | Freight charges | Price including freight charges |
|---|---|---|---|---|
| **FP-L, galvanized** | C | 624,– | 106,– | 730,– |

| Drum Trolley Type FP-V | Category | Price | Freight charges | Price including freight charges |
|---|---|---|---|---|
| **FP-V, galvanized** | C | 605,– | 106,– | 711,– |

| Drum Dolly Type FRW | Category | Price | Freight charges | Price including freight charges |
|---|---|---|---|---|
| **FRW-I, hot-dip galvanized** | A | 116,– | 32,– | 148,– |
| **FRW-II, hot-dip galvanized** | A | 154,– | 32,– | 186,– |
| **FRW-III, hot-dip galvanized** | A | 207,– | 106,– | 313,– |

| Dolly Type GRW | Category | Price | Freight charges | Price including freight charges |
|---|---|---|---|---|
| **GRW-I, hot-dip galvanized** | F | 126,– | 32,– | 158,– |
| Handle, hot-dip galvanized | F | 55,– | 10,– | 65,– |
| **GRW-II, hot-dip galvanized** | F | 143,– | 32,– | 175,– |
| Handle, hot-dip galvanized | F | 55,– | 10,– | 65,– |
| **GRW-III, hot-dip galvanized** | F | 179,– | 106,– | 285,– |
| Handle, hot-dip galvanized | F | 55,– | 10,– | 65,– |

| Gas Cylinder Wall Bracket Type GWH | Category | Price | Freight charges | Price including freight charges |
|---|---|---|---|---|
| **GWH 140-I, hot-dip galvanized** | F | 26,– | 32,– | 58,– |
| **GWH 140-II, hot-dip galvanized** | F | 40,– | 32,– | 72,– |

Prices in EUR, valid EXW DE-46354 Südlohn, DE-38820 Halberstadt, unpacked
Freight charges valid CPT Denmark, islands and oversea territories excluded



BAUER GmbH
Eichendorffstr. 62
46354 Südlohn, Germany

Tel. +49 2862 70 90
info@bauer-suedlohn.com
www.bauer-suedlohn.com

Geschäftsführer
Patrick Bauer, Pascal Bauer
Amtsgericht Coesfeld HRB 5259

TÜVNORD
TÜV NORD CERT GmbH
DIN EN ISO 9001
tuev-nord.de

# Price List 0726 en-DK
# Workspace Material Handling

| Gas Cylinder Wall Bracket Type GWH | Category | Price | Freight charges | Price including freight charges |
|---|---|---|---|---|
| GWH 140-III, hot-dip galvanized | F | 59,– | 32,– | 91,– |
| GWH 230-I, hot-dip galvanized | F | 28,– | 32,– | 60,– |
| GWH 230-II, hot-dip galvanized | F | 43,– | 32,– | 75,– |
| GWH 230-III, hot-dip galvanized | F | 65,– | 32,– | 97,– |
| GWH 320-I, hot-dip galvanized | F | 29,– | 32,– | 61,– |
| GWH 320-II, hot-dip galvanized | F | 48,– | 32,– | 80,– |
| GWH 320-III, hot-dip galvanized | F | 72,– | 32,– | 104,– |

| Fork Lifter Type GZH-A | Category | Price | Freight charges | Price including freight charges |
|---|---|---|---|---|
| GZH-A, painted | F | 114,– | 32,– | 146,– |

| Fork Lifter Type GZH-B | Category | Price | Freight charges | Price including freight charges |
|---|---|---|---|---|
| GZH-B, painted | F | 114,– | 32,– | 146,– |

| Fork Pallet Type GZP | Category | Price | Freight charges | Price including freight charges |
|---|---|---|---|---|
| GZP 4, hot-dip galvanized | A | 161,– | 106,– | 267,– |
| GZP 8, hot-dip galvanized | A | 201,– | 106,– | 307,– |

| IBC Residue Drainer Type IR | Category | Price | Freight charges | Price including freight charges |
|---|---|---|---|---|
| IR-1, hot-dip galvanized | A | 596,– | 106,– | 702,– |
| IR-2, hot-dip galvanized | A | 711,– | 106,– | 817,– |
| IR-3, hot-dip galvanized | A | 596,– | 106,– | 702,– |

| Tilting Canister Stand Type KAH | Category | Price | Freight charges | Price including freight charges |
|---|---|---|---|---|
| KAH-5, galvanized | A | 96,– | 32,– | 128,– |
| KAH-25, galvanized | A | 109,– | 32,– | 141,– |
| KAH-60, galvanized | A | 140,– | 32,– | 172,– |

| Sheet Metal Storage Units With Trays Type KBR | Category | Price | Freight charges | Price including freight charges |
|---|---|---|---|---|
| KBR 1, painted | A | 5985,– | 542,– | 6527,– |
| KBR 2, painted | A | 6207,– | on request | on request |
| KBR 3, painted | A | 6667,– | on request | on request |

| Liftomat Type L/E | Category | Price | Freight charges | Price including freight charges |
|---|---|---|---|---|
| L/E 1300, painted | B | 4908,– | 201,– | 5109,– |
| L/E 1300, hot-dip galvanized | B | 5578,– | 201,– | 5779,– |

| Liftomat Type L/M | Category | Price | Freight charges | Price including freight charges |
|---|---|---|---|---|
| L/M 600, painted | B | 3553,– | 143,– | 3696,– |
| L/M 600, hot-dip galvanized | B | 4025,– | 143,– | 4168,– |
| L/M 1300, painted | B | 3986,– | 201,– | 4187,– |
| L/M 1300, hot-dip galvanized | B | 4569,– | 201,– | 4770,– |

Prices in EUR, valid EXW DE-46354 Südlohn, DE-38820 Halberstadt, unpacked
Freight charges valid CPT Denmark, islands and oversea territories excluded



BAUER GmbH
Eichendorffstr. 62
46354 Südlohn, Germany

Tel. +49 2862 70 90
info@bauer-suedlohn.com
www.bauer-suedlohn.com

Geschäftsführer
Patrick Bauer, Pascal Bauer
Amtsgericht Coesfeld HRB 5259

TÜVNORD
TÜV NORD CERT GmbH
DIN EN ISO 9001
tuev-nord.de

# Price List 0726 en-DK
# Workspace Material Handling

| Security Cage for Storage Type LBM | Category | Price | Freight charges | Price including freight charges |
|---|---|---|---|---|
| LBM 1500, hot-dip galvanized | A | 2002,– | 201,– | 2203,– |
| LBM 3000, hot-dip galvanized | A | 2747,– | 335,– | 3082,– |
| LBM 4500, hot-dip galvanized | A | 3492,– | 335,– | 3827,– |
| LBM 6000, hot-dip galvanized | A | 4232,– | 439,– | 4671,– |

| Wheelie Bin Tipping Station Type MKS | Category | Price | Freight charges | Price including freight charges |
|---|---|---|---|---|
| MKS-12V, painted | A | 3745,– | 143,– | 3888,– |
| External Charger for 12 V electro-hydraulic constructions | A | 201,– | 15,– | 216,– |
| MKS-230V, painted | A | 3745,– | 143,– | 3888,– |

| Wheelie Bin Tipping Station Type MKS-F | Category | Price | Freight charges | Price including freight charges |
|---|---|---|---|---|
| MKS-F, painted | A | 2459,– | 143,– | 2602,– |

| Wheelie Bin Tipping Station Type MKS-H | Category | Price | Freight charges | Price including freight charges |
|---|---|---|---|---|
| MKS-H, painted | A | 2459,– | 143,– | 2602,– |

| Stillage Transport Cage Type MTP | Category | Price | Freight charges | Price including freight charges |
|---|---|---|---|---|
| MTP 2000, hot-dip galvanized | A | 2196,– | 201,– | 2397,– |
| Tension belt | A | 48,– | 8,– | 56,– |
| MTP 3000, hot-dip galvanized | A | 2774,– | 256,– | 3030,– |
| Tension belt | A | 48,– | 8,– | 56,– |

| Two-Wheeled Pallet Picker Type PZ | Category | Price | Freight charges | Price including freight charges |
|---|---|---|---|---|
| PZ, hot-dip galvanized | F | 456,– | 32,– | 488,– |

| Tyre Fitting Equipment Type RM | Category | Price | Freight charges | Price including freight charges |
|---|---|---|---|---|
| RM, painted | F | 458,– | 32,– | 490,– |

| Surround for Waste Bins Type SECOMAT | Category | Price | Freight charges | Price including freight charges |
|---|---|---|---|---|
| S 120-D, powder coated | B | 682,– | 106,– | 788,– |
| S 120-K, powder coated | B | 764,– | 106,– | 870,– |
| S 240-D, powder coated | B | 782,– | 106,– | 888,– |
| S 240-K, powder coated | B | 856,– | 106,– | 962,– |
| S1100, powder-coated | B | 791,– | 106,– | 897,– |
| S1100-W, powder-coated | B | 1040,– | 143,– | 1183,– |
| S1100-WT, powder-coated | B | 1305,– | 167,– | 1472,– |
| S1100-WTB, powder-coated | B | 1408,– | 198,– | 1606,– |
| S4USE, powder coated | C | 2656,– | 201,– | 2857,– |

| Gas Cylinder Pallet Type SFP | Category | Price | Freight charges | Price including freight charges |
|---|---|---|---|---|
| SFP 4, hot-dip galvanized | C | 346,– | 106,– | 452,– |
| SFP 8, hot-dip galvanized | C | 460,– | 143,– | 603,– |

Prices in EUR, valid EXW DE-46354 Südlohn, DE-38820 Halberstadt, unpacked
Freight charges valid CPT Denmark, islands and oversea territories excluded



BAUER GmbH
Eichendorffstr. 62
46354 Südlohn, Germany

Tel. +49 2862 70 90
info@bauer-suedlohn.com
www.bauer-suedlohn.com

Geschäftsführer
Patrick Bauer, Pascal Bauer
Amtsgericht Coesfeld HRB 5259

TÜVNORD
TÜV NORD CERT GmbH
DIN EN ISO 9001
tuev-nord.de

# Price List 0726 en-DK
# Workspace Material Handling

| Loading Support Type VS | Category | Price | Freight charges | Price including freight charges |
|---|---|---|---|---|
| VS, painted | C | 765,– | 143,– | 908,– |

Prices in EUR, valid EXW DE-46354 Südlohn, DE-38820 Halberstadt, unpacked
Freight charges valid CPT Denmark, islands and oversea territories excluded



BAUER GmbH
Eichendorffstr. 62
46354 Südlohn, Germany

Tel. +49 2862 70 90
info@bauer-suedlohn.com
www.bauer-suedlohn.com

Geschäftsführer
Patrick Bauer, Pascal Bauer
Amtsgericht Coesfeld HRB 5259

TÜVNORD
TÜV NORD CERT GmbH
DIN EN ISO 9001
tuev-nord.de

# Price List 0726 en-DK
# Environment / Storage

| Sump Trays Type SERIES 2000 | Category | Price | Freight charges | Price including freight charges |
|---|---|---|---|---|
| **2000, painted** | B | 250,– | 106,– | 356,– |
| **2000, hot-dip galvanized** | B | 288,– | 106,– | 394,– |
| **2002, painted** | B | 285,– | 106,– | 391,– |
| **2002, hot-dip galvanized** | B | 322,– | 106,– | 428,– |
| **2008, painted** | B | 250,– | 106,– | 356,– |
| **2008, hot-dip galvanized** | B | 300,– | 106,– | 406,– |
| **2010, painted** | B | 301,– | 106,– | 407,– |
| Drum Support FA 60-1, hot-dip galvanized | B | 109,– | 15,– | 124,– |
| Drum Support FA 60-2, hot-dip galvanized | B | 118,– | 18,– | 136,– |
| Drum Support FA 60-3, hot-dip galvanized | B | 138,– | 21,– | 159,– |
| Drum Support FA 200-1, hot-dip galvanized | B | 118,– | 15,– | 133,– |
| Can Shelf Type GR-A, galvanized | B | 138,– | 32,– | 170,– |
| Can Shelf Type GR-B, galvanized | B | 138,– | 32,– | 170,– |
| Can Shelf Type GR-C, galvanized | B | 138,– | 32,– | 170,– |
| **2010, hot-dip galvanized** | B | 351,– | 106,– | 457,– |
| Drum Support FA 60-1, hot-dip galvanized | B | 109,– | 15,– | 124,– |
| Drum Support FA 60-2, hot-dip galvanized | B | 118,– | 18,– | 136,– |
| Drum Support FA 60-3, hot-dip galvanized | B | 138,– | 21,– | 159,– |
| Drum Support FA 200-1, hot-dip galvanized | B | 118,– | 15,– | 133,– |
| Can Shelf Type GR-A, galvanized | B | 138,– | 32,– | 170,– |
| Can Shelf Type GR-B, galvanized | B | 138,– | 32,– | 170,– |
| Can Shelf Type GR-C, galvanized | B | 138,– | 32,– | 170,– |
| **2016, painted** | B | 262,– | 106,– | 368,– |
| **2016, hot-dip galvanized** | B | 314,– | 106,– | 420,– |
| **2018, painted** | B | 315,– | 106,– | 421,– |
| Drum Support FA 60-1, hot-dip galvanized | B | 109,– | 15,– | 124,– |
| Drum Support FA 60-2, hot-dip galvanized | B | 118,– | 18,– | 136,– |
| Drum Support FA 60-3, hot-dip galvanized | B | 138,– | 21,– | 159,– |
| Drum Support FA 200-1, hot-dip galvanized | B | 118,– | 15,– | 133,– |
| Can Shelf Type GR-A, galvanized | B | 138,– | 32,– | 170,– |
| Can Shelf Type GR-B, galvanized | B | 138,– | 32,– | 170,– |
| Can Shelf Type GR-C, galvanized | B | 138,– | 32,– | 170,– |
| **2018, hot-dip galvanized** | B | 365,– | 106,– | 471,– |
| Drum Support FA 60-1, hot-dip galvanized | B | 109,– | 15,– | 124,– |
| Drum Support FA 60-2, hot-dip galvanized | B | 118,– | 18,– | 136,– |
| Drum Support FA 60-3, hot-dip galvanized | B | 138,– | 21,– | 159,– |
| Drum Support FA 200-1, hot-dip galvanized | B | 118,– | 15,– | 133,– |
| Can Shelf Type GR-A, galvanized | B | 138,– | 32,– | 170,– |
| Can Shelf Type GR-B, galvanized | B | 138,– | 32,– | 170,– |
| Can Shelf Type GR-C, galvanized | B | 138,– | 32,– | 170,– |
| **2026, painted** | B | 262,– | 106,– | 368,– |
| **2026, hot-dip galvanized** | B | 310,– | 106,– | 416,– |

Prices in EUR, valid EXW DE-46354 Südlohn, DE-38820 Halberstadt, unpacked
Freight charges valid CPT Denmark, islands and oversea territories excluded



BAUER GmbH
Eichendorffstr. 62
46354 Südlohn, Germany

Tel. +49 2862 70 90
info@bauer-suedlohn.com
www.bauer-suedlohn.com

Geschäftsführer
Patrick Bauer, Pascal Bauer
Amtsgericht Coesfeld HRB 5259

TÜVNORD
TÜV NORD CERT GmbH
DIN EN ISO 9001
tuev-nord.de

# Price List 0726 en-DK
# Environment / Storage

| Sump Trays Type SERIES 2000 | Category | Price | Freight charges | Price including freight charges |
|---|---|---|---|---|
| **2028, painted** | B | 366,– | 106,– | 472,– |
| Drum Support FA 60-1, hot-dip galvanized | B | 109,– | 15,– | 124,– |
| Drum Support FA 60-2, hot-dip galvanized | B | 118,– | 18,– | 136,– |
| Drum Support FA 60-3, hot-dip galvanized | B | 138,– | 21,– | 159,– |
| Drum Support FA 200-1, hot-dip galvanized | B | 118,– | 15,– | 133,– |
| Drum Support FA 200-2, hot-dip galvanized | B | 138,– | 22,– | 160,– |
| Can Shelf Type GR-A, galvanized | B | 138,– | 32,– | 170,– |
| Can Shelf Type GR-B, galvanized | B | 138,– | 32,– | 170,– |
| Can Shelf Type GR-C, galvanized | B | 138,– | 32,– | 170,– |
| **2028, hot-dip galvanized** | B | 412,– | 106,– | 518,– |
| Drum Support FA 60-1, hot-dip galvanized | B | 109,– | 15,– | 124,– |
| Drum Support FA 60-2, hot-dip galvanized | B | 118,– | 18,– | 136,– |
| Drum Support FA 60-3, hot-dip galvanized | B | 138,– | 21,– | 159,– |
| Drum Support FA 200-1, hot-dip galvanized | B | 118,– | 15,– | 133,– |
| Drum Support FA 200-2, hot-dip galvanized | B | 138,– | 22,– | 160,– |
| Can Shelf Type GR-A, galvanized | B | 138,– | 32,– | 170,– |
| Can Shelf Type GR-B, galvanized | B | 138,– | 32,– | 170,– |
| Can Shelf Type GR-C, galvanized | B | 138,– | 32,– | 170,– |
| **2030, painted** | B | 275,– | 106,– | 381,– |
| **2030, hot-dip galvanized** | B | 321,– | 106,– | 427,– |
| **2032, painted** | B | 378,– | 106,– | 484,– |
| Drum Support FA 60-1, hot-dip galvanized | B | 109,– | 15,– | 124,– |
| Drum Support FA 60-2, hot-dip galvanized | B | 118,– | 18,– | 136,– |
| Drum Support FA 60-3, hot-dip galvanized | B | 138,– | 21,– | 159,– |
| Drum Support FA 200-1, hot-dip galvanized | B | 118,– | 15,– | 133,– |
| Drum Support FA 200-2, hot-dip galvanized | B | 138,– | 22,– | 160,– |
| Can Shelf Type GR-A, galvanized | B | 138,– | 32,– | 170,– |
| Can Shelf Type GR-B, galvanized | B | 138,– | 32,– | 170,– |
| Can Shelf Type GR-C, galvanized | B | 138,– | 32,– | 170,– |
| **2032, hot-dip galvanized** | B | 426,– | 106,– | 532,– |
| Drum Support FA 60-1, hot-dip galvanized | B | 109,– | 15,– | 124,– |
| Drum Support FA 60-2, hot-dip galvanized | B | 118,– | 18,– | 136,– |
| Drum Support FA 60-3, hot-dip galvanized | B | 138,– | 21,– | 159,– |
| Drum Support FA 200-1, hot-dip galvanized | B | 118,– | 15,– | 133,– |
| Drum Support FA 200-2, hot-dip galvanized | B | 138,– | 22,– | 160,– |
| Can Shelf Type GR-A, galvanized | B | 138,– | 32,– | 170,– |
| Can Shelf Type GR-B, galvanized | B | 138,– | 32,– | 170,– |
| Can Shelf Type GR-C, galvanized | B | 138,– | 32,– | 170,– |
| **2040, painted** | B | 351,– | 106,– | 457,– |
| **2040, hot-dip galvanized** | B | 426,– | 106,– | 532,– |
| **2042, painted** | B | 455,– | 143,– | 598,– |
| Drum Support FA 60-1, hot-dip galvanized | B | 109,– | 15,– | 124,– |
| Drum Support FA 60-2, hot-dip galvanized | B | 118,– | 18,– | 136,– |
| Drum Support FA 60-3, hot-dip galvanized | B | 138,– | 21,– | 159,– |
| Can Shelf Type GR-A, galvanized | B | 138,– | 32,– | 170,– |
| Can Shelf Type GR-B, galvanized | B | 138,– | 32,– | 170,– |

Prices in EUR, valid EXW DE-46354 Südlohn, DE-38820 Halberstadt, unpacked
Freight charges valid CPT Denmark, islands and oversea territories excluded



BAUER GmbH
Eichendorffstr. 62
46354 Südlohn, Germany

Tel. +49 2862 70 90
info@bauer-suedlohn.com
www.bauer-suedlohn.com

Geschäftsführer
Patrick Bauer, Pascal Bauer
Amtsgericht Coesfeld HRB 5259

TÜVNORD
TÜV NORD CERT GmbH
DIN EN ISO 9001
tuev-nord.de

# Price List 0726 en-DK
# Environment / Storage

| Sump Trays Type SERIES 2000 | Category | Price | Freight charges | Price including freight charges |
|---|---|---|---|---|
| Can Shelf Type GR-C, galvanized | B | 138,– | 32,– | 170,– |
| **2042, hot-dip galvanized** | B | 529,– | 143,– | 672,– |
| Drum Support FA 60-1, hot-dip galvanized | B | 109,– | 15,– | 124,– |
| Drum Support FA 60-2, hot-dip galvanized | B | 118,– | 18,– | 136,– |
| Drum Support FA 60-3, hot-dip galvanized | B | 138,– | 21,– | 159,– |
| Can Shelf Type GR-A, galvanized | B | 138,– | 32,– | 170,– |
| Can Shelf Type GR-B, galvanized | B | 138,– | 32,– | 170,– |
| Can Shelf Type GR-C, galvanized | B | 138,– | 32,– | 170,– |
| **2048, painted** | B | 271,– | 106,– | 377,– |
| **2048, hot-dip galvanized** | B | 316,– | 106,– | 422,– |
| **2050, painted** | B | 369,– | 106,– | 475,– |
| Drum Support FA 60-1, hot-dip galvanized | B | 109,– | 15,– | 124,– |
| Drum Support FA 60-2, hot-dip galvanized | B | 118,– | 18,– | 136,– |
| Drum Support FA 60-3, hot-dip galvanized | B | 138,– | 21,– | 159,– |
| Can Shelf Type GR-A, galvanized | B | 138,– | 32,– | 170,– |
| Can Shelf Type GR-B, galvanized | B | 138,– | 32,– | 170,– |
| Can Shelf Type GR-C, galvanized | B | 138,– | 32,– | 170,– |
| **2050, hot-dip galvanized** | B | 414,– | 106,– | 520,– |
| Drum Support FA 60-1, hot-dip galvanized | B | 109,– | 15,– | 124,– |
| Drum Support FA 60-2, hot-dip galvanized | B | 118,– | 18,– | 136,– |
| Drum Support FA 60-3, hot-dip galvanized | B | 138,– | 21,– | 159,– |
| Can Shelf Type GR-A, galvanized | B | 138,– | 32,– | 170,– |
| Can Shelf Type GR-B, galvanized | B | 138,– | 32,– | 170,– |
| Can Shelf Type GR-C, galvanized | B | 138,– | 32,– | 170,– |

| Sump Trays Type SERIES 2000/SW | Category | Price | Freight charges | Price including freight charges |
|---|---|---|---|---|
| **2002/SW, painted** | B | 427,– | 106,– | 533,– |
| **2002/SW, hot-dip galvanized** | B | 464,– | 106,– | 570,– |
| **2018/SW, painted** | B | 468,– | 143,– | 611,– |
| Drum Support FA 60-1, hot-dip galvanized | B | 109,– | 15,– | 124,– |
| Drum Support FA 60-2, hot-dip galvanized | B | 118,– | 18,– | 136,– |
| Drum Support FA 60-3, hot-dip galvanized | B | 138,– | 21,– | 159,– |
| Drum Support FA 200-1, hot-dip galvanized | B | 118,– | 15,– | 133,– |
| Can Shelf Type GR-A, galvanized | B | 138,– | 32,– | 170,– |
| Can Shelf Type GR-B, galvanized | B | 138,– | 32,– | 170,– |
| Can Shelf Type GR-C, galvanized | B | 138,– | 32,– | 170,– |
| **2018/SW, hot-dip galvanized** | B | 517,– | 143,– | 660,– |
| Drum Support FA 60-1, hot-dip galvanized | B | 109,– | 15,– | 124,– |
| Drum Support FA 60-2, hot-dip galvanized | B | 118,– | 18,– | 136,– |
| Drum Support FA 60-3, hot-dip galvanized | B | 138,– | 21,– | 159,– |
| Drum Support FA 200-1, hot-dip galvanized | B | 118,– | 15,– | 133,– |
| Can Shelf Type GR-A, galvanized | B | 138,– | 32,– | 170,– |
| Can Shelf Type GR-B, galvanized | B | 138,– | 32,– | 170,– |
| Can Shelf Type GR-C, galvanized | B | 138,– | 32,– | 170,– |
| **2032/SW, painted** | B | 552,– | 143,– | 695,– |
| Drum Support FA 60-1, hot-dip galvanized | B | 109,– | 15,– | 124,– |

Prices in EUR, valid EXW DE-46354 Südlohn, DE-38820 Halberstadt, unpacked
Freight charges valid CPT Denmark, islands and oversea territories excluded



BAUER GmbH
Eichendorffstr. 62
46354 Südlohn, Germany

Tel. +49 2862 70 90
info@bauer-suedlohn.com
www.bauer-suedlohn.com

Geschäftsführer
Patrick Bauer, Pascal Bauer
Amtsgericht Coesfeld HRB 5259

TÜVNORD
TÜV NORD CERT GmbH
DIN EN ISO 9001
tuev-nord.de

# Price List 0726 en-DK
# Environment / Storage

| Sump Trays Type SERIES 2000/SW | Category | Price | Freight charges | Price including freight charges |
|---|---|---|---|---|
| Drum Support FA 60-2, hot-dip galvanized | B | 118,– | 18,– | 136,– |
| Drum Support FA 60-3, hot-dip galvanized | B | 138,– | 21,– | 159,– |
| Drum Support FA 200-1, hot-dip galvanized | B | 118,– | 15,– | 133,– |
| Drum Support FA 200-2, hot-dip galvanized | B | 138,– | 22,– | 160,– |
| Can Shelf Type GR-A, galvanized | B | 138,– | 32,– | 170,– |
| Can Shelf Type GR-B, galvanized | B | 138,– | 32,– | 170,– |
| Can Shelf Type GR-C, galvanized | B | 138,– | 32,– | 170,– |
| **2032/SW, hot-dip galvanized** | B | 600,– | 143,– | 743,– |
| Drum Support FA 60-1, hot-dip galvanized | B | 109,– | 15,– | 124,– |
| Drum Support FA 60-2, hot-dip galvanized | B | 118,– | 18,– | 136,– |
| Drum Support FA 60-3, hot-dip galvanized | B | 138,– | 21,– | 159,– |
| Drum Support FA 200-1, hot-dip galvanized | B | 118,– | 15,– | 133,– |
| Drum Support FA 200-2, hot-dip galvanized | B | 138,– | 22,– | 160,– |
| Can Shelf Type GR-A, galvanized | B | 138,– | 32,– | 170,– |
| Can Shelf Type GR-B, galvanized | B | 138,– | 32,– | 170,– |
| Can Shelf Type GR-C, galvanized | B | 138,– | 32,– | 170,– |
| **2042/SW, painted** | B | 685,– | 196,– | 881,– |
| Drum Support FA 60-1, hot-dip galvanized | B | 109,– | 15,– | 124,– |
| Drum Support FA 60-2, hot-dip galvanized | B | 118,– | 18,– | 136,– |
| Drum Support FA 60-3, hot-dip galvanized | B | 138,– | 21,– | 159,– |
| Can Shelf Type GR-A, galvanized | B | 138,– | 32,– | 170,– |
| Can Shelf Type GR-B, galvanized | B | 138,– | 32,– | 170,– |
| Can Shelf Type GR-C, galvanized | B | 138,– | 32,– | 170,– |
| **2042/SW, hot-dip galvanized** | B | 760,– | 196,– | 956,– |
| Drum Support FA 60-1, hot-dip galvanized | B | 109,– | 15,– | 124,– |
| Drum Support FA 60-2, hot-dip galvanized | B | 118,– | 18,– | 136,– |
| Drum Support FA 60-3, hot-dip galvanized | B | 138,– | 21,– | 159,– |
| Can Shelf Type GR-A, galvanized | B | 138,– | 32,– | 170,– |
| Can Shelf Type GR-B, galvanized | B | 138,– | 32,– | 170,– |
| Can Shelf Type GR-C, galvanized | B | 138,– | 32,– | 170,– |

| Mobile Sump Trays Type SERIES 2000 | Category | Price | Freight charges | Price including freight charges |
|---|---|---|---|---|
| **2004, painted** | B | 590,– | 106,– | 696,– |
| Fixture and Tension Belt for 1 x 200 Litre Drum | B | 48,– | 9,– | 57,– |
| **2004, hot-dip galvanized** | B | 657,– | 106,– | 763,– |
| Fixture and Tension Belt for 1 x 200 Litre Drum | B | 48,– | 9,– | 57,– |
| **2020, painted** | B | 656,– | 106,– | 762,– |
| Fixture and Tension Belt for 2 x 200 Litre Drums | B | 48,– | 9,– | 57,– |
| **2020, hot-dip galvanized** | B | 717,– | 106,– | 823,– |
| Fixture and Tension Belt for 2 x 200 Litre Drums | B | 48,– | 9,– | 57,– |
| **2050 SR, painted** | B | 709,– | 106,– | 815,– |
| Fixture and Tension Belt for 3 x 200 Litre Drums | B | 48,– | 9,– | 57,– |
| **2050 SR, hot-dip galvanized** | B | 766,– | 143,– | 909,– |
| Fixture and Tension Belt for 3 x 200 Litre Drums | B | 48,– | 9,– | 57,– |

Prices in EUR, valid EXW DE-46354 Südlohn, DE-38820 Halberstadt, unpacked
Freight charges valid CPT Denmark, islands and oversea territories excluded



BAUER GmbH
Eichendorffstr. 62
46354 Südlohn, Germany

Tel. +49 2862 70 90
info@bauer-suedlohn.com
www.bauer-suedlohn.com

Geschäftsführer
Patrick Bauer, Pascal Bauer
Amtsgericht Coesfeld HRB 5259

TÜVNORD
TÜV NORD CERT GmbH
DIN EN ISO 9001
tuev-nord.de

# Price List 0726 en-DK
# Environment / Storage

| Drum Shelves with Sump Trays Type SERIES 3000 | Category | Price | Freight charges | Price including freight charges |
|---|---|---|---|---|
| **3000, hot-dip galvanized** | B | 1091,– | 143,– | 1234,– |
| Retainer Bar | B | 48,– | 12,– | 60,– |
| Rotating Support RA 200, hot-dip galvanized | B | 97,– | 10,– | 107,– |
| Can Stand Type GS, hot-dip galvanized | B | 65,– | 18,– | 83,– |
| Crash Guard | B | 75,– | 9,– | 84,– |
| **3001, hot-dip galvanized** | B | 919,– | 143,– | 1062,– |
| Retainer Bar | B | 48,– | 12,– | 60,– |
| Rotating Support RA 200, hot-dip galvanized | B | 97,– | 10,– | 107,– |
| Can Stand Type GS, hot-dip galvanized | B | 65,– | 18,– | 83,– |
| Crash Guard | B | 75,– | 9,– | 84,– |
| **3002, hot-dip galvanized** | B | 1299,– | 196,– | 1495,– |
| Retainer Bar | B | 48,– | 12,– | 60,– |
| Rotating Support RA 200, hot-dip galvanized | B | 97,– | 10,– | 107,– |
| Can Stand Type GS, hot-dip galvanized | B | 65,– | 18,– | 83,– |
| Crash Guard | B | 75,– | 9,– | 84,– |
| **3003, hot-dip galvanized** | B | 1101,– | 196,– | 1297,– |
| Retainer Bar | B | 48,– | 12,– | 60,– |
| Rotating Support RA 200, hot-dip galvanized | B | 97,– | 10,– | 107,– |
| Can Stand Type GS, hot-dip galvanized | B | 65,– | 18,– | 83,– |
| Crash Guard | B | 75,– | 9,– | 84,– |
| **3004, hot-dip galvanized** | B | 1344,– | 143,– | 1487,– |
| Retainer Bar | B | 48,– | 12,– | 60,– |
| Rotating Support RA 60, hot-dip galvanized | B | 97,– | 9,– | 106,– |
| Can Stand Type GS, hot-dip galvanized | B | 65,– | 18,– | 83,– |
| Crash Guard | B | 75,– | 9,– | 84,– |
| **3005, hot-dip galvanized** | B | 1216,– | 143,– | 1359,– |
| Retainer Bar | B | 48,– | 12,– | 60,– |
| Rotating Support RA 60, hot-dip galvanized | B | 97,– | 9,– | 106,– |
| Can Stand Type GS, hot-dip galvanized | B | 65,– | 18,– | 83,– |
| Crash Guard | B | 75,– | 9,– | 84,– |
| **3006, hot-dip galvanized** | B | 1697,– | 254,– | 1951,– |
| Retainer Bar | B | 48,– | 12,– | 60,– |
| Rotating Support RA 60, hot-dip galvanized | B | 97,– | 9,– | 106,– |
| Can Stand Type GS, hot-dip galvanized | B | 65,– | 18,– | 83,– |
| Crash Guard | B | 75,– | 9,– | 84,– |
| **3007, hot-dip galvanized** | B | 1449,– | 196,– | 1645,– |
| Retainer Bar | B | 48,– | 12,– | 60,– |
| Rotating Support RA 60, hot-dip galvanized | B | 97,– | 9,– | 106,– |
| Can Stand Type GS, hot-dip galvanized | B | 65,– | 18,– | 83,– |
| Crash Guard | B | 75,– | 9,– | 84,– |
| **3010, hot-dip galvanized** | B | 1288,– | 196,– | 1484,– |
| Retainer Bar | B | 48,– | 12,– | 60,– |
| Rotating Support RA 200, hot-dip galvanized | B | 97,– | 10,– | 107,– |
| Can Stand Type GS, hot-dip galvanized | B | 65,– | 18,– | 83,– |
| Crash Guard | B | 75,– | 9,– | 84,– |
| **3011, hot-dip galvanized** | B | 1071,– | 196,– | 1267,– |

Prices in EUR, valid EXW DE-46354 Südlohn, DE-38820 Halberstadt, unpacked
Freight charges valid CPT Denmark, islands and oversea territories excluded



BAUER GmbH
Eichendorffstr. 62
46354 Südlohn, Germany

Tel. +49 2862 70 90
info@bauer-suedlohn.com
www.bauer-suedlohn.com

Geschäftsführer
Patrick Bauer, Pascal Bauer
Amtsgericht Coesfeld HRB 5259

TÜVNORD
TÜV NORD CERT GmbH
DIN EN ISO 9001
tuev-nord.de

# Price List 0726 en-DK
# Environment / Storage

| Drum Shelves with Sump Trays Type SERIES 3000 | Category | Price | Freight charges | Price including freight charges |
|---|---|---|---|---|
| Retainer Bar | B | 48,– | 12,– | 60,– |
| Rotating Support RA 200, hot-dip galvanized | B | 97,– | 10,– | 107,– |
| Can Stand Type GS, hot-dip galvanized | B | 65,– | 18,– | 83,– |
| Crash Guard | B | 75,– | 9,– | 84,– |

| Small Can Shelves with Sumps Type SERIES 3000 | Category | Price | Freight charges | Price including freight charges |
|---|---|---|---|---|
| **3017-4E, galvanized** | B | 478,– | 106,– | 584,– |
| **3018-4E, galvanized** | B | 397,– | 106,– | 503,– |
| **3019-4E, galvanized** | B | 576,– | 143,– | 719,– |
| **3020-4E, galvanized** | B | 493,– | 143,– | 636,– |
| **3021-4E, galvanized** | B | 719,– | 143,– | 862,– |
| **3022-4E, galvanized** | B | 626,– | 106,– | 732,– |
| **3023-4E, galvanized** | B | 1162,– | 196,– | 1358,– |
| **3024-4E, galvanized** | B | 968,– | 196,– | 1164,– |

| Shelves Type AG | Category | Price | Freight charges | Price including freight charges |
|---|---|---|---|---|
| **AG 60-1, hot-dip galvanized** | B | 112,– | 12,– | 124,– |
| **AG 60-2, hot-dip galvanized** | B | 117,– | 14,– | 131,– |
| **AG 60-3, hot-dip galvanized** | B | 126,– | 15,– | 141,– |

| Sump Tray Type AM | Category | Price | Freight charges | Price including freight charges |
|---|---|---|---|---|
| **AM-1, painted** | B | 335,– | 106,– | 441,– |
| **AM-1, hot-dip galvanized** | B | 379,– | 106,– | 485,– |
| **AM-2, painted** | B | 370,– | 106,– | 476,– |
| Drum Support FA 60-1, hot-dip galvanized | B | 109,– | 15,– | 124,– |
| Drum Support FA 60-2, hot-dip galvanized | B | 118,– | 18,– | 136,– |
| Drum Support FA 60-3, hot-dip galvanized | B | 138,– | 21,– | 159,– |
| Drum Support FA 200-1, hot-dip galvanized | B | 118,– | 15,– | 133,– |
| Can Shelf Type GR-A, galvanized | B | 138,– | 32,– | 170,– |
| Can Shelf Type GR-B, galvanized | B | 138,– | 32,– | 170,– |
| Can Shelf Type GR-C, galvanized | B | 138,– | 32,– | 170,– |
| **AM-2, hot-dip galvanized** | B | 427,– | 106,– | 533,– |
| Drum Support FA 60-1, hot-dip galvanized | B | 109,– | 15,– | 124,– |
| Drum Support FA 60-2, hot-dip galvanized | B | 118,– | 18,– | 136,– |
| Drum Support FA 60-3, hot-dip galvanized | B | 138,– | 21,– | 159,– |
| Drum Support FA 200-1, hot-dip galvanized | B | 118,– | 15,– | 133,– |
| Can Shelf Type GR-A, galvanized | B | 138,– | 32,– | 170,– |
| Can Shelf Type GR-B, galvanized | B | 138,– | 32,– | 170,– |
| Can Shelf Type GR-C, galvanized | B | 138,– | 32,– | 170,– |
| **AM-4/A, painted** | B | 443,– | 106,– | 549,– |
| Drum Support FA 60-1, hot-dip galvanized | B | 109,– | 15,– | 124,– |
| Drum Support FA 60-2, hot-dip galvanized | B | 118,– | 18,– | 136,– |
| Drum Support FA 60-3, hot-dip galvanized | B | 138,– | 21,– | 159,– |
| Drum Support FA 200-1, hot-dip galvanized | B | 118,– | 15,– | 133,– |
| Drum Support FA 200-2, hot-dip galvanized | B | 138,– | 22,– | 160,– |

Prices in EUR, valid EXW DE-46354 Südlohn, DE-38820 Halberstadt, unpacked
Freight charges valid CPT Denmark, islands and oversea territories excluded



BAUER GmbH
Eichendorffstr. 62
46354 Südlohn, Germany

Tel. +49 2862 70 90
info@bauer-suedlohn.com
www.bauer-suedlohn.com

Geschäftsführer
Patrick Bauer, Pascal Bauer
Amtsgericht Coesfeld HRB 5259

TÜVNORD
TÜV NORD CERT GmbH
DIN EN ISO 9001
tuev-nord.de

# Price List 0726 en-DK
# Environment / Storage

| Sump Tray Type AM | Category | Price | Freight charges | Price including freight charges |
|---|---|---|---|---|
| Can Shelf Type GR-A, galvanized | B | 138,– | 32,– | 170,– |
| Can Shelf Type GR-B, galvanized | B | 138,– | 32,– | 170,– |
| Can Shelf Type GR-C, galvanized | B | 138,– | 32,– | 170,– |
| **AM-4/A, hot-dip galvanized** | B | 499,– | 143,– | 642,– |
| Drum Support FA 60-1, hot-dip galvanized | B | 109,– | 15,– | 124,– |
| Drum Support FA 60-2, hot-dip galvanized | B | 118,– | 18,– | 136,– |
| Drum Support FA 60-3, hot-dip galvanized | B | 138,– | 21,– | 159,– |
| Drum Support FA 200-1, hot-dip galvanized | B | 118,– | 15,– | 133,– |
| Drum Support FA 200-2, hot-dip galvanized | B | 138,– | 22,– | 160,– |
| Can Shelf Type GR-A, galvanized | B | 138,– | 32,– | 170,– |
| Can Shelf Type GR-B, galvanized | B | 138,– | 32,– | 170,– |
| Can Shelf Type GR-C, galvanized | B | 138,– | 32,– | 170,– |
| **AM-4/B, painted** | B | 532,– | 143,– | 675,– |
| Drum Support FA 60-1, hot-dip galvanized | B | 109,– | 15,– | 124,– |
| Drum Support FA 60-2, hot-dip galvanized | B | 118,– | 18,– | 136,– |
| Drum Support FA 60-3, hot-dip galvanized | B | 138,– | 21,– | 159,– |
| Can Shelf Type GR-A, galvanized | B | 138,– | 32,– | 170,– |
| Can Shelf Type GR-B, galvanized | B | 138,– | 32,– | 170,– |
| Can Shelf Type GR-C, galvanized | B | 138,– | 32,– | 170,– |
| **AM-4/B, hot-dip galvanized** | B | 624,– | 143,– | 767,– |
| Drum Support FA 60-1, hot-dip galvanized | B | 109,– | 15,– | 124,– |
| Drum Support FA 60-2, hot-dip galvanized | B | 118,– | 18,– | 136,– |
| Drum Support FA 60-3, hot-dip galvanized | B | 138,– | 21,– | 159,– |
| Can Shelf Type GR-A, galvanized | B | 138,– | 32,– | 170,– |
| Can Shelf Type GR-B, galvanized | B | 138,– | 32,– | 170,– |
| Can Shelf Type GR-C, galvanized | B | 138,– | 32,– | 170,– |

| Sump Tray Type AO | Category | Price | Freight charges | Price including freight charges |
|---|---|---|---|---|
| **AO-1, painted** | B | 292,– | 106,– | 398,– |
| **AO-1, hot-dip galvanized** | B | 337,– | 106,– | 443,– |
| **AO-2, painted** | B | 310,– | 106,– | 416,– |
| **AO-2, hot-dip galvanized** | B | 367,– | 106,– | 473,– |
| **AO-4/A, painted** | B | 322,– | 106,– | 428,– |
| **AO-4/A, hot-dip galvanized** | B | 378,– | 106,– | 484,– |
| **AO-4/B, painted** | B | 412,– | 106,– | 518,– |
| **AO-4/B, hot-dip galvanized** | B | 500,– | 106,– | 606,– |

| Sump Tray Type AW | Category | Price | Freight charges | Price including freight charges |
|---|---|---|---|---|
| **AW 450, painted** | B | 641,– | 143,– | 784,– |
| **AW 450, hot-dip galvanized** | B | 795,– | 143,– | 938,– |
| **AW 800, painted** | B | 667,– | 143,– | 810,– |
| **AW 800, hot-dip galvanized** | B | 831,– | 143,– | 974,– |
| **AW 1000, painted** | B | 672,– | 143,– | 815,– |
| **AW 1000, hot-dip galvanized** | B | 838,– | 143,– | 981,– |
| **AW 1000-2, painted** | B | 861,– | 254,– | 1115,– |

Prices in EUR, valid EXW DE-46354 Südlohn, DE-38820 Halberstadt, unpacked
Freight charges valid CPT Denmark, islands and oversea territories excluded



BAUER GmbH
Eichendorffstr. 62
46354 Südlohn, Germany

Tel. +49 2862 70 90
info@bauer-suedlohn.com
www.bauer-suedlohn.com

Geschäftsführer
Patrick Bauer, Pascal Bauer
Amtsgericht Coesfeld HRB 5259

TÜVNORD
TÜV NORD CERT GmbH
DIN EN ISO 9001
tuev-nord.de

# Price List 0726 en-DK
# Environment / Storage

| Sump Tray Type AW | Category | Price | Freight charges | Price including freight charges |
|---|---|---|---|---|
| **AW 1000-2, hot-dip galvanized** | B | 966,– | 254,– | 1220,– |
| **AW 1000-3, painted** | B | 1524,– | 254,– | 1778,– |
| **AW 1000-3, hot-dip galvanized** | B | 1641,– | 309,– | 1950,– |
| **AW 1000-10F, painted** | B | 1032,– | 254,– | 1286,– |
| **AW 1000-10F, hot-dip galvanized** | B | 1195,– | 254,– | 1449,– |

| Sump Tray Type AW/SW | Category | Price | Freight charges | Price including freight charges |
|---|---|---|---|---|
| **AW 450/SW, painted** | B | 844,– | 143,– | 987,– |
| **AW 450/SW, hot-dip galvanized** | B | 998,– | 201,– | 1199,– |
| **AW 800/SW, painted** | B | 869,– | 201,– | 1070,– |
| **AW 800/SW, hot-dip galvanized** | B | 1032,– | 201,– | 1233,– |
| **AW 1000/SW, painted** | B | 874,– | 201,– | 1075,– |
| **AW 1000/SW, hot-dip galvanized** | B | 1042,– | 201,– | 1243,– |
| **AW 1000-2/SW, painted** | B | 1091,– | 254,– | 1345,– |
| **AW 1000-2/SW, hot-dip galvanized** | B | 1196,– | 309,– | 1505,– |
| **AW 1000-3/SW, painted** | B | 1787,– | on request | on request |
| **AW 1000-3/SW, hot-dip galvanized** | B | 2121,– | on request | on request |
| **AW 1000-10F/SW, painted** | B | 1387,– | 309,– | 1696,– |
| **AW 1000-10F/SW, hot-dip galvanized** | B | 1548,– | 309,– | 1857,– |

| Mobile Sump Tray AW 60-1 SR | Category | Price | Freight charges | Price including freight charges |
|---|---|---|---|---|
| **AW 60-1 SR, painted** | B | 325,– | 106,– | 431,– |
| Fixture and Tension belt for 2 x 60 Litre Drums | B | 45,– | 8,– | 53,– |
| **AW 60-1 SR, hot-dip galvanized** | B | 345,– | 106,– | 451,– |
| Fixture and Tension belt for 2 x 60 Litre Drums | B | 45,– | 8,– | 53,– |

| Mobile Sump Tray AW 60-1 SRF | Category | Price | Freight charges | Price including freight charges |
|---|---|---|---|---|
| **AW 60-1 SRF, painted** | B | 429,– | 106,– | 535,– |
| **AW 60-1 SRF, hot-dip galvanized** | B | 451,– | 106,– | 557,– |

| Sump Tray Type AW 60 | Category | Price | Freight charges | Price including freight charges |
|---|---|---|---|---|
| **AW 60-1, painted** | B | 176,– | 32,– | 208,– |
| Grid GR 60-1, hot-dip galvanized | B | 23,– | 8,– | 31,– |
| Drum Suppport FA 60-A, galvanized | B | 25,– | 8,– | 33,– |
| Rotating Support RA 60-A, hot-dip galvanized | B | 97,– | 9,– | 106,– |
| **AG 60-1, hot-dip galvanized** | B | 112,– | 12,– | 124,– |
| Canister Stand AB, galvanized | B | 19,– | 8,– | 27,– |
| Castor Set, polyamide, Load capacity 375 kg / castor set | B | 86,– | 15,– | 101,– |
| **AW 60-1, hot-dip galvanized** | B | 189,– | 32,– | 221,– |
| Grid GR 60-1, hot-dip galvanized | B | 23,– | 8,– | 31,– |
| Drum Suppport FA 60-A, galvanized | B | 25,– | 8,– | 33,– |
| Rotating Support RA 60-A, hot-dip galvanized | B | 97,– | 9,– | 106,– |
| **AG 60-1, hot-dip galvanized** | B | 112,– | 12,– | 124,– |
| Canister Stand AB, galvanized | B | 19,– | 8,– | 27,– |
| Castor Set, polyamide, Load capacity 375 kg / castor set | B | 86,– | 15,– | 101,– |

Prices in EUR, valid EXW DE-46354 Südlohn, DE-38820 Halberstadt, unpacked
Freight charges valid CPT Denmark, islands and oversea territories excluded



BAUER GmbH
Eichendorffstr. 62
46354 Südlohn, Germany

Tel. +49 2862 70 90
info@bauer-suedlohn.com
www.bauer-suedlohn.com

Geschäftsführer
Patrick Bauer, Pascal Bauer
Amtsgericht Coesfeld HRB 5259

TÜVNORD
TÜV NORD CERT GmbH
DIN EN ISO 9001
tuev-nord.de

# Price List 0726 en-DK
# Environment / Storage

| Sump Tray Type AW 60 | Category | Price | Freight charges | Price including freight charges |
|---|---|---|---|---|
| **AW 60-2, painted** | B | 177,– | 106,– | 283,– |
| Grid GR 60-2, hot-dip galvanized | B | 27,– | 12,– | 39,– |
| Drum Suppport FA 60-A, galvanized | B | 25,– | 8,– | 33,– |
| Rotating Support RA 60-A, hot-dip galvanized | B | 97,– | 9,– | 106,– |
| **AG 60-2, hot-dip galvanized** | B | 117,– | 14,– | 131,– |
| Canister Stand AB, galvanized | B | 19,– | 8,– | 27,– |
| Castor Set, polyamide, Load capacity 375 kg / castor set | B | 86,– | 15,– | 101,– |
| **AW 60-2, hot-dip galvanized** | B | 195,– | 106,– | 301,– |
| Grid GR 60-2, hot-dip galvanized | B | 27,– | 12,– | 39,– |
| Drum Suppport FA 60-A, galvanized | B | 25,– | 8,– | 33,– |
| Rotating Support RA 60-A, hot-dip galvanized | B | 97,– | 9,– | 106,– |
| **AG 60-2, hot-dip galvanized** | B | 117,– | 14,– | 131,– |
| Canister Stand AB, galvanized | B | 19,– | 8,– | 27,– |
| Castor Set, polyamide, Load capacity 375 kg / castor set | B | 86,– | 15,– | 101,– |
| **AW 60-3, painted** | B | 193,– | 106,– | 299,– |
| Grid GR 60-3, hot-dip galvanized | B | 40,– | 14,– | 54,– |
| Drum Suppport FA 60-A, galvanized | B | 25,– | 8,– | 33,– |
| Rotating Support RA 60-A, hot-dip galvanized | B | 97,– | 9,– | 106,– |
| **AG 60-3, hot-dip galvanized** | B | 126,– | 15,– | 141,– |
| Canister Stand AB, galvanized | B | 19,– | 8,– | 27,– |
| Castor Set, polyamide, Load capacity 375 kg / castor set | B | 86,– | 15,– | 101,– |
| **AW 60-3, hot-dip galvanized** | B | 217,– | 106,– | 323,– |
| Grid GR 60-3, hot-dip galvanized | B | 40,– | 14,– | 54,– |
| Drum Suppport FA 60-A, galvanized | B | 25,– | 8,– | 33,– |
| Rotating Support RA 60-A, hot-dip galvanized | B | 97,– | 9,– | 106,– |
| **AG 60-3, hot-dip galvanized** | B | 126,– | 15,– | 141,– |
| Canister Stand AB, galvanized | B | 19,– | 8,– | 27,– |
| Castor Set, polyamide, Load capacity 375 kg / castor set | B | 86,– | 15,– | 101,– |

| Sump Tray Type AW 60/M | Category | Price | Freight charges | Price including freight charges |
|---|---|---|---|---|
| **AW 60-1/M, painted** | B | 196,– | 106,– | 302,– |
| Drum Suppport FA 60-A, galvanized | B | 25,– | 8,– | 33,– |
| Rotating Support RA 60-A, hot-dip galvanized | B | 97,– | 9,– | 106,– |
| **AG 60-1, hot-dip galvanized** | B | 112,– | 12,– | 124,– |
| Canister Stand AB, galvanized | B | 19,– | 8,– | 27,– |
| Castor Set, polyamide, Load capacity 375 kg / castor set | B | 86,– | 15,– | 101,– |
| **AW 60-1/M, hot-dip galvanized** | B | 211,– | 106,– | 317,– |
| Drum Suppport FA 60-A, galvanized | B | 25,– | 8,– | 33,– |
| Rotating Support RA 60-A, hot-dip galvanized | B | 97,– | 9,– | 106,– |
| **AG 60-1, hot-dip galvanized** | B | 112,– | 12,– | 124,– |
| Canister Stand AB, galvanized | B | 19,– | 8,– | 27,– |
| Castor Set, polyamide, Load capacity 375 kg / castor set | B | 86,– | 15,– | 101,– |
| **AW 60-2/M, painted** | B | 203,– | 106,– | 309,– |
| Drum Suppport FA 60-A, galvanized | B | 25,– | 8,– | 33,– |
| Drum Support FA 60-2, hot-dip galvanized | B | 118,– | 18,– | 136,– |
| Rotating Support RA 60-A, hot-dip galvanized | B | 97,– | 9,– | 106,– |

Prices in EUR, valid EXW DE-46354 Südlohn, DE-38820 Halberstadt, unpacked
Freight charges valid CPT Denmark, islands and oversea territories excluded



BAUER GmbH
Eichendorffstr. 62
46354 Südlohn, Germany

Tel. +49 2862 70 90
info@bauer-suedlohn.com
www.bauer-suedlohn.com

Geschäftsführer
Patrick Bauer, Pascal Bauer
Amtsgericht Coesfeld HRB 5259

TÜVNORD
TÜV NORD CERT GmbH
DIN EN ISO 9001
tuev-nord.de

# Price List 0726 en-DK
# Environment / Storage

| Sump Tray Type AW 60/M | Category | Price | Freight charges | Price including freight charges |
|---|---|---|---|---|
| **AG 60-2, hot-dip galvanized** | B | 117,– | 14,– | 131,– |
| Canister Stand AB, galvanized | B | 19,– | 8,– | 27,– |
| Castor Set, polyamide, Load capacity 375 kg / castor set | B | 86,– | 15,– | 101,– |
| **AW 60-2/M, hot-dip galvanized** | B | 221,– | 106,– | 327,– |
| Drum Suppport FA 60-A, galvanized | B | 25,– | 8,– | 33,– |
| Drum Support FA 60-2, hot-dip galvanized | B | 118,– | 18,– | 136,– |
| Rotating Support RA 60-A, hot-dip galvanized | B | 97,– | 9,– | 106,– |
| **AG 60-2, hot-dip galvanized** | B | 117,– | 14,– | 131,– |
| Canister Stand AB, galvanized | B | 19,– | 8,– | 27,– |
| Castor Set, polyamide, Load capacity 375 kg / castor set | B | 86,– | 15,– | 101,– |
| **AW 60-3/M, painted** | B | 232,– | 106,– | 338,– |
| Drum Suppport FA 60-A, galvanized | B | 25,– | 8,– | 33,– |
| Drum Support FA 60-2, hot-dip galvanized | B | 118,– | 18,– | 136,– |
| Drum Support FA 60-3, hot-dip galvanized | B | 138,– | 21,– | 159,– |
| Rotating Support RA 60-A, hot-dip galvanized | B | 97,– | 9,– | 106,– |
| **AG 60-3, hot-dip galvanized** | B | 126,– | 15,– | 141,– |
| Canister Stand AB, galvanized | B | 19,– | 8,– | 27,– |
| Castor Set, polyamide, Load capacity 375 kg / castor set | B | 86,– | 15,– | 101,– |
| **AW 60-3/M, hot-dip galvanized** | B | 254,– | 106,– | 360,– |
| Drum Suppport FA 60-A, galvanized | B | 25,– | 8,– | 33,– |
| Drum Support FA 60-2, hot-dip galvanized | B | 118,– | 18,– | 136,– |
| Drum Support FA 60-3, hot-dip galvanized | B | 138,– | 21,– | 159,– |
| Rotating Support RA 60-A, hot-dip galvanized | B | 97,– | 9,– | 106,– |
| **AG 60-3, hot-dip galvanized** | B | 126,– | 15,– | 141,– |
| Canister Stand AB, galvanized | B | 19,– | 8,– | 27,– |
| Castor Set, polyamide, Load capacity 375 kg / castor set | B | 86,– | 15,– | 101,– |

| Sump Tray Type AW/PE | Category | Price | Freight charges | Price including freight charges |
|---|---|---|---|---|
| **AW-1/PE, painted** | B | 658,– | 106,– | 764,– |
| **AW-1/PE, hot-dip galvanized** | B | 688,– | 106,– | 794,– |
| **AW-2/PE, painted** | B | 721,– | 106,– | 827,– |
| Drum Support FA 60-1, hot-dip galvanized | B | 109,– | 15,– | 124,– |
| Drum Support FA 60-2, hot-dip galvanized | B | 118,– | 18,– | 136,– |
| Drum Support FA 60-3, hot-dip galvanized | B | 138,– | 21,– | 159,– |
| Drum Support FA 200-1, hot-dip galvanized | B | 118,– | 15,– | 133,– |
| Can Shelf Type GR-A, galvanized | B | 138,– | 32,– | 170,– |
| Can Shelf Type GR-B, galvanized | B | 138,– | 32,– | 170,– |
| Can Shelf Type GR-C, galvanized | B | 138,– | 32,– | 170,– |
| **AW-2/PE, hot-dip galvanized** | B | 757,– | 106,– | 863,– |
| Drum Support FA 60-1, hot-dip galvanized | B | 109,– | 15,– | 124,– |
| Drum Support FA 60-2, hot-dip galvanized | B | 118,– | 18,– | 136,– |
| Drum Support FA 60-3, hot-dip galvanized | B | 138,– | 21,– | 159,– |
| Drum Support FA 200-1, hot-dip galvanized | B | 118,– | 15,– | 133,– |
| Can Shelf Type GR-A, galvanized | B | 138,– | 32,– | 170,– |
| Can Shelf Type GR-B, galvanized | B | 138,– | 32,– | 170,– |
| Can Shelf Type GR-C, galvanized | B | 138,– | 32,– | 170,– |

Prices in EUR, valid EXW DE-46354 Südlohn, DE-38820 Halberstadt, unpacked
Freight charges valid CPT Denmark, islands and oversea territories excluded



BAUER GmbH
Eichendorffstr. 62
46354 Südlohn, Germany

Tel. +49 2862 70 90
info@bauer-suedlohn.com
www.bauer-suedlohn.com

Geschäftsführer
Patrick Bauer, Pascal Bauer
Amtsgericht Coesfeld HRB 5259

TÜVNORD
TÜV NORD CERT GmbH
DIN EN ISO 9001
tuev-nord.de

# Price List 0726 en-DK
# Environment / Storage

| Sump Tray Type AW/PE | Category | Price | Freight charges | Price including freight charges |
|---|---|---|---|---|
| **AW-4/A/PE, painted** | B | 818,– | 143,– | 961,– |
| Drum Support FA 60-1, hot-dip galvanized | B | 109,– | 15,– | 124,– |
| Drum Support FA 60-2, hot-dip galvanized | B | 118,– | 18,– | 136,– |
| Drum Support FA 60-3, hot-dip galvanized | B | 138,– | 21,– | 159,– |
| Drum Support FA 200-1, hot-dip galvanized | B | 118,– | 15,– | 133,– |
| Drum Support FA 200-2, hot-dip galvanized | B | 138,– | 22,– | 160,– |
| Can Shelf Type GR-A, galvanized | B | 138,– | 32,– | 170,– |
| Can Shelf Type GR-B, galvanized | B | 138,– | 32,– | 170,– |
| Can Shelf Type GR-C, galvanized | B | 138,– | 32,– | 170,– |
| **AW-4/A/PE, hot-dip galvanized** | B | 859,– | 143,– | 1002,– |
| Drum Support FA 60-1, hot-dip galvanized | B | 109,– | 15,– | 124,– |
| Drum Support FA 60-2, hot-dip galvanized | B | 118,– | 18,– | 136,– |
| Drum Support FA 60-3, hot-dip galvanized | B | 138,– | 21,– | 159,– |
| Drum Support FA 200-1, hot-dip galvanized | B | 118,– | 15,– | 133,– |
| Drum Support FA 200-2, hot-dip galvanized | B | 138,– | 22,– | 160,– |
| Can Shelf Type GR-A, galvanized | B | 138,– | 32,– | 170,– |
| Can Shelf Type GR-B, galvanized | B | 138,– | 32,– | 170,– |
| Can Shelf Type GR-C, galvanized | B | 138,– | 32,– | 170,– |
| **AW-4/B/PE, painted** | B | 1021,– | 196,– | 1217,– |
| Drum Support FA 60-1, hot-dip galvanized | B | 109,– | 15,– | 124,– |
| Drum Support FA 60-2, hot-dip galvanized | B | 118,– | 18,– | 136,– |
| Drum Support FA 60-3, hot-dip galvanized | B | 138,– | 21,– | 159,– |
| Can Shelf Type GR-A, galvanized | B | 138,– | 32,– | 170,– |
| Can Shelf Type GR-B, galvanized | B | 138,– | 32,– | 170,– |
| Can Shelf Type GR-C, galvanized | B | 138,– | 32,– | 170,– |
| **AW-4/B/PE, hot-dip galvanized** | B | 1096,– | 196,– | 1292,– |
| Drum Support FA 60-1, hot-dip galvanized | B | 109,– | 15,– | 124,– |
| Drum Support FA 60-2, hot-dip galvanized | B | 118,– | 18,– | 136,– |
| Drum Support FA 60-3, hot-dip galvanized | B | 138,– | 21,– | 159,– |
| Can Shelf Type GR-A, galvanized | B | 138,– | 32,– | 170,– |
| Can Shelf Type GR-B, galvanized | B | 138,– | 32,– | 170,– |
| Can Shelf Type GR-C, galvanized | B | 138,– | 32,– | 170,– |
| **AW 1000/PE, painted** | B | 1386,– | 201,– | 1587,– |
| **AW 1000/PE, hot-dip galvanized** | B | 1575,– | 201,– | 1776,– |
| **AW 1000-2/PE, painted** | B | 1700,– | 254,– | 1954,– |
| **AW 1000-2/PE, hot-dip galvanized** | B | 1818,– | 254,– | 2072,– |

| Sump Trays AW 8-12 | Category | Price | Freight charges | Price including freight charges |
|---|---|---|---|---|
| **AW-8, painted** | B | 732,– | 196,– | 928,– |
| **AW-8, hot-dip galvanized** | B | 815,– | 254,– | 1069,– |
| **AW-10, painted** | B | 904,– | 254,– | 1158,– |
| **AW-10, hot-dip galvanized** | B | 1239,– | 254,– | 1493,– |
| **AW-12, painted** | B | 1035,– | 254,– | 1289,– |
| **AW-12, hot-dip galvanized** | B | 1431,– | 254,– | 1685,– |

Prices in EUR, valid EXW DE-46354 Südlohn, DE-38820 Halberstadt, unpacked
Freight charges valid CPT Denmark, islands and oversea territories excluded



BAUER GmbH
Eichendorffstr. 62
46354 Südlohn, Germany

Tel. +49 2862 70 90
info@bauer-suedlohn.com
www.bauer-suedlohn.com

Geschäftsführer
Patrick Bauer, Pascal Bauer
Amtsgericht Coesfeld HRB 5259

TÜVNORD
TÜV NORD CERT GmbH
DIN EN ISO 9001
tuev-nord.de

# Price List 0726 en-DK
# Environment / Storage

| Sump Tray Type AWA | Category | Price | Freight charges | Price including freight charges |
|---|---|---|---|---|
| **AWA 1000, painted** | B | 864,– | 143,– | 1007,– |
| **AWA 1000, hot-dip galvanized** | B | 1045,– | 201,– | 1246,– |
| **AWA 1000-2, painted** | B | 1239,– | 254,– | 1493,– |
| **AWA 1000-2, hot-dip galvanized** | B | 1374,– | 254,– | 1628,– |
| **AWA 1000-3, painted** | B | 2254,– | 309,– | 2563,– |
| **AWA 1000-3, hot-dip galvanized** | B | 2385,– | 388,– | 2773,– |
| **AWA 21, painted** | B | 1048,– | 254,– | 1302,– |
| **AWA 21, hot-dip galvanized** | B | 1182,– | 254,– | 1436,– |
| **AWA 31, painted** | B | 1956,– | 309,– | 2265,– |
| **AWA 31, hot-dip galvanized** | B | 2077,– | 309,– | 2386,– |
| **AWA 32, painted** | B | 2127,– | 309,– | 2436,– |
| **AWA 32, hot-dip galvanized** | B | 2250,– | 309,– | 2559,– |

| Sump Tray Type AWA/SW | Category | Price | Freight charges | Price including freight charges |
|---|---|---|---|---|
| **AWA 1000/SW, painted** | B | 1064,– | 201,– | 1265,– |
| **AWA 1000/SW, hot-dip galvanized** | B | 1246,– | 201,– | 1447,– |
| **AWA 1000-2/SW, painted** | B | 1472,– | 309,– | 1781,– |
| **AWA 1000-2/SW, hot-dip galvanized** | B | 1605,– | 309,– | 1914,– |
| **AWA 1000-3/SW, painted** | B | 2518,– | on request | on request |
| **AWA 1000-3/SW, hot-dip galvanized** | B | 2648,– | on request | on request |
| **AWA 21/SW, painted** | B | 1278,– | 309,– | 1587,– |
| **AWA 21/SW, hot-dip galvanized** | B | 1413,– | 309,– | 1722,– |
| **AWA 31/SW, painted** | B | 2217,– | on request | on request |
| **AWA 31/SW, hot-dip galvanized** | B | 2339,– | on request | on request |
| **AWA 32/SW, painted** | B | 2388,– | on request | on request |
| **AWA 32/SW, hot-dip galvanized** | B | 2512,– | on request | on request |

| Sump Tray Type AW-F | Category | Price | Freight charges | Price including freight charges |
|---|---|---|---|---|
| **AW-F 1, painted** | B | 657,– | 106,– | 763,– |
| Fixture and Tension Belt for 1 x 200 Litre Drum | B | 48,– | 9,– | 57,– |
| **AW-F 1, hot-dip galvanized** | B | 780,– | 106,– | 886,– |
| Fixture and Tension Belt for 1 x 200 Litre Drum | B | 48,– | 9,– | 57,– |
| **AW-F 2, painted** | B | 688,– | 106,– | 794,– |
| Fixture and Tension Belt for 2 x 200 Litre Drums | B | 48,– | 9,– | 57,– |
| **AW-F 2, hot-dip galvanized** | B | 842,– | 106,– | 948,– |
| Fixture and Tension Belt for 2 x 200 Litre Drums | B | 48,– | 9,– | 57,– |

| Ground Protection Spill Tray Type BSW | Category | Price | Freight charges | Price including freight charges |
|---|---|---|---|---|
| **BSW 21, galvanized** | B | 449,– | 143,– | 592,– |
| Access Ramp AR 21, galvanized | B | 166,– | 22,– | 188,– |
| Access Corner Piece AE 24, galvanized | B | 130,– | 10,– | 140,– |
| Cross-Shaped Connector KV 24, galvanized | B | 20,– | 8,– | 28,– |
| Tray Connecting Strip WV 21, galvanized | B | 22,– | 8,– | 30,– |
| **BSW 22, galvanized** | B | 590,– | 143,– | 733,– |
| Access Ramp AR 21, galvanized | B | 166,– | 22,– | 188,– |

Prices in EUR, valid EXW DE-46354 Südlohn, DE-38820 Halberstadt, unpacked
Freight charges valid CPT Denmark, islands and oversea territories excluded



BAUER GmbH
Eichendorffstr. 62
46354 Südlohn, Germany

Tel. +49 2862 70 90
info@bauer-suedlohn.com
www.bauer-suedlohn.com

Geschäftsführer
Patrick Bauer, Pascal Bauer
Amtsgericht Coesfeld HRB 5259

TÜVNORD
TÜV NORD CERT GmbH
DIN EN ISO 9001
tuev-nord.de

# Price List 0726 en-DK
# Environment / Storage

| Ground Protection Spill Tray Type BSW | Category | Price | Freight charges | Price including freight charges |
|---|---|---|---|---|
| Access Ramp AR 22, galvanized | B | 211,– | 32,– | 243,– |
| Access Corner Piece AE 24, galvanized | B | 130,– | 10,– | 140,– |
| Cross-Shaped Connector KV 24, galvanized | B | 20,– | 8,– | 28,– |
| Tray Connecting Strip WV 21, galvanized | B | 22,– | 8,– | 30,– |
| Tray Connecting Strip WV 22, galvanized | B | 24,– | 8,– | 32,– |
| **BSW 23, galvanized** | B | 764,– | 249,– | 1013,– |
| Access Ramp AR 23, galvanized | B | 300,– | 159,– | 459,– |
| Access Ramp AR 21, galvanized | B | 166,– | 22,– | 188,– |
| Access Corner Piece AE 24, galvanized | B | 130,– | 10,– | 140,– |
| Cross-Shaped Connector KV 24, galvanized | B | 20,– | 8,– | 28,– |
| Tray Connecting Strip WV 21, galvanized | B | 22,– | 8,– | 30,– |
| Tray Connecting Strip WV 23, galvanized | B | 37,– | 9,– | 46,– |
| **BSW 24, galvanized** | B | 1341,– | 301,– | 1642,– |
| Access Ramp AR 23, galvanized | B | 300,– | 159,– | 459,– |
| Access Ramp AR 22, galvanized | B | 211,– | 32,– | 243,– |
| Access Corner Piece AE 24, galvanized | B | 130,– | 10,– | 140,– |
| Cross-Shaped Connector KV 24, galvanized | B | 20,– | 8,– | 28,– |
| Tray Connecting Strip WV 22, galvanized | B | 24,– | 8,– | 32,– |
| Tray Connecting Strip WV 23, galvanized | B | 37,– | 9,– | 46,– |
| **BSW 121, galvanized** | B | 199,– | 32,– | 231,– |
| Access Ramp AR 121, galvanized | B | 163,– | 22,– | 185,– |
| Cross-Shaped Connector KV 24, galvanized | B | 20,– | 8,– | 28,– |
| Tray Connecting Strip WV 121, galvanized | B | 21,– | 9,– | 30,– |
| **BSW 122, galvanized** | B | 243,– | 106,– | 349,– |
| Access Ramp AR 121, galvanized | B | 163,– | 22,– | 185,– |
| Access Ramp AR 122, galvanized | B | 275,– | 36,– | 311,– |
| Access Corner Piece AE 124, galvanized | B | 261,– | 21,– | 282,– |
| Cross-Shaped Connector KV 24, galvanized | B | 20,– | 8,– | 28,– |
| Tray Connecting Strip WV 121, galvanized | B | 21,– | 9,– | 30,– |
| Tray Connecting Strip WV 122, galvanized | B | 26,– | 9,– | 35,– |
| **BSW 123, galvanized** | B | 339,– | 106,– | 445,– |
| Access Ramp AR 122, galvanized | B | 275,– | 36,– | 311,– |
| Access Corner Piece AE 124, galvanized | B | 261,– | 21,– | 282,– |
| Cross-Shaped Connector KV 24, galvanized | B | 20,– | 8,– | 28,– |
| Tray Connecting Strip WV 122, galvanized | B | 26,– | 9,– | 35,– |
| **BSW 124, galvanized** | B | 553,– | 143,– | 696,– |
| Access Ramp AR 122, galvanized | B | 275,– | 36,– | 311,– |
| Access Ramp AR 123, galvanized | B | 338,– | 143,– | 481,– |
| Access Corner Piece AE 124, galvanized | B | 261,– | 21,– | 282,– |
| Cross-Shaped Connector KV 24, galvanized | B | 20,– | 8,– | 28,– |
| Tray Connecting Strip WV 122, galvanized | B | 26,– | 9,– | 35,– |
| Tray Connecting Strip WV 123, galvanized | B | 36,– | 9,– | 45,– |
| **BSW 125, galvanized** | B | 426,– | 196,– | 622,– |
| Access Ramp AR 121, galvanized | B | 163,– | 22,– | 185,– |
| Access Ramp AR 124, galvanized | B | 392,– | 196,– | 588,– |
| Access Corner Piece AE 124, galvanized | B | 261,– | 21,– | 282,– |

Prices in EUR, valid EXW DE-46354 Südlohn, DE-38820 Halberstadt, unpacked
Freight charges valid CPT Denmark, islands and oversea territories excluded



BAUER GmbH
Eichendorffstr. 62
46354 Südlohn, Germany

Tel. +49 2862 70 90
info@bauer-suedlohn.com
www.bauer-suedlohn.com

Geschäftsführer
Patrick Bauer, Pascal Bauer
Amtsgericht Coesfeld HRB 5259

TÜVNORD
TÜV NORD CERT GmbH
DIN EN ISO 9001
tuev-nord.de

# Price List 0726 en-DK
# Environment / Storage

| Ground Protection Spill Tray Type BSW | Category | Price | Freight charges | Price including freight charges |
|---|---|---|---|---|
| Cross-Shaped Connector KV 24, galvanized | B | 20,– | 8,– | 28,– |
| Tray Connecting Strip WV 121, galvanized | B | 21,– | 9,– | 30,– |
| Tray Connecting Strip WV 124, galvanized | B | 49,– | 9,– | 58,– |
| **BSW 126, galvanized** | B | 668,– | 254,– | 922,– |
| Access Ramp AR 122, galvanized | B | 275,– | 36,– | 311,– |
| Access Ramp AR 124, galvanized | B | 392,– | 196,– | 588,– |
| Access Corner Piece AE 124, galvanized | B | 261,– | 21,– | 282,– |
| Cross-Shaped Connector KV 24, galvanized | B | 20,– | 8,– | 28,– |
| Tray Connecting Strip WV 122, galvanized | B | 26,– | 9,– | 35,– |
| Tray Connecting Strip WV 124, galvanized | B | 49,– | 9,– | 58,– |

| Polyethylene Bunded Spill Flooring Type BWP-PE | Category | Price | Freight charges | Price including freight charges |
|---|---|---|---|---|
| **BWP-PE 150, made of robust polyethylene** | B | 316,– | 106,– | 422,– |
| Ramp Type BWR, robust polyethylene, black | B | 222,– | 12,– | 234,– |
| Joining Element BWV 2, stainless steel 1.4301 | B | 29,– | 9,– | 38,– |
| **BWP-PE 300, made of robust polyethylene** | B | 641,– | 106,– | 747,– |
| Ramp Type BWR, robust polyethylene, black | B | 222,– | 12,– | 234,– |
| Joining Element BWV 4, stainless steel 1.4301 | B | 38,– | 10,– | 48,– |

| Polyethylene Bunded Spill Flooring Type BWPS-PE | Category | Price | Freight charges | Price including freight charges |
|---|---|---|---|---|
| **BWPS-PE 300, made of robust polyethylene** | B | 786,– | 159,– | 945,– |
| Ramp Type BWR, robust polyethylene, black | B | 222,– | 12,– | 234,– |
| Joining Element BWV 2, stainless steel 1.4301 | B | 29,– | 9,– | 38,– |

| Shelf Container Type CEH | Category | Price | Freight charges | Price including freight charges |
|---|---|---|---|---|
| **CEH 29-2, painted** | C | 9142,– | on request | on request |
| **CEH 29-2 IBC, painted** | C | 10076,– | on request | on request |
| **CEH 36-2 IBC, painted** | C | 11727,– | on request | on request |
| **CEH 38-2, painted** | C | 11719,– | on request | on request |
| **CEH 59-2, painted** | C | 17352,– | on request | on request |
| **CEH 59-2 IBC, painted** | C | 18629,– | on request | on request |
| **CEH 75-2 IBC, painted** | C | 22081,– | on request | on request |
| **CEH 81-2, painted** | C | 22524,– | on request | on request |

| Shelf Container Type CEN | Category | Price | Freight charges | Price including freight charges |
|---|---|---|---|---|
| **CEN 29-2, painted** | C | 7714,– | on request | on request |
| Potential equalisation | C | 184,– | 0,– | 184,– |
| **CEN 29-2 IBC, painted** | C | 8421,– | on request | on request |
| Potential equalisation | C | 184,– | 0,– | 184,– |
| **CEN 29-2b, painted** | C | 13445,– | on request | on request |
| Potential equalisation | C | 366,– | 0,– | 366,– |
| **CEN 29-2b IBC, painted** | C | 14379,– | on request | on request |
| Potential equalisation | C | 366,– | 0,– | 366,– |
| **CEN 29-3, painted** | C | 12140,– | on request | on request |
| Potential equalisation | C | 274,– | 0,– | 274,– |

Prices in EUR, valid EXW DE-46354 Südlohn, DE-38820 Halberstadt, unpacked
Freight charges valid CPT Denmark, islands and oversea territories excluded



BAUER GmbH
Eichendorffstr. 62
46354 Südlohn, Germany

Tel. +49 2862 70 90
info@bauer-suedlohn.com
www.bauer-suedlohn.com

Geschäftsführer
Patrick Bauer, Pascal Bauer
Amtsgericht Coesfeld HRB 5259

TÜVNORD
TÜV NORD CERT GmbH
DIN EN ISO 9001
tuev-nord.de

# Price List 0726 en-DK
# Environment / Storage

| Shelf Container Type CEN | Category | Price | Freight charges | Price including freight charges |
|---|---|---|---|---|
| **CEN 29-3 IBC, painted** | C | 12917,– | on request | on request |
| Potential equalisation | C | 274,– | 0,– | 274,– |
| **CEN 29-3b, painted** | C | 19757,– | on request | on request |
| Potential equalisation | C | 546,– | 0,– | 546,– |
| **CEN 29-3b IBC, painted** | C | 20862,– | on request | on request |
| Potential equalisation | C | 546,– | 0,– | 546,– |
| **CEN 33-2 IBC, painted** | C | 9393,– | on request | on request |
| Potential equalisation | C | 184,– | 0,– | 184,– |
| **CEN 33-2b IBC, painted** | C | 15740,– | on request | on request |
| Potential equalisation | C | 366,– | 0,– | 366,– |
| **CEN 33-3 IBC, painted** | C | 13849,– | on request | on request |
| Potential equalisation | C | 274,– | 0,– | 274,– |
| **CEN 33-3b IBC, painted** | C | 22018,– | on request | on request |
| Potential equalisation | C | 546,– | 0,– | 546,– |
| **CEN 36-2, painted** | C | 9470,– | on request | on request |
| Potential equalisation | C | 184,– | 0,– | 184,– |
| **CEN 36-2b, painted** | C | 16110,– | on request | on request |
| Potential equalisation | C | 366,– | 0,– | 366,– |
| **CEN 36-3, painted** | C | 14046,– | on request | on request |
| Potential equalisation | C | 274,– | 0,– | 274,– |
| **CEN 36-3b, painted** | C | 22693,– | on request | on request |
| Potential equalisation | C | 546,– | 0,– | 546,– |
| **CEN 59-2, painted** | C | 12772,– | on request | on request |
| Potential equalisation | C | 365,– | 0,– | 365,– |
| **CEN 59-2 IBC, painted** | C | 13917,– | on request | on request |
| Potential equalisation | C | 365,– | 0,– | 365,– |
| **CEN 59-2b, painted** | C | 21982,– | on request | on request |
| Potential equalisation | C | 729,– | 0,– | 729,– |
| **CEN 59-2b IBC, painted** | C | 22754,– | on request | on request |
| Potential equalisation | C | 729,– | 0,– | 729,– |
| **CEN 59-3, painted** | C | 19663,– | on request | on request |
| Potential equalisation | C | 545,– | 0,– | 545,– |
| **CEN 59-3 IBC, painted** | C | 20812,– | on request | on request |
| Potential equalisation | C | 545,– | 0,– | 545,– |
| **CEN 59-3b, painted** | C | 31741,– | on request | on request |
| Potential equalisation | C | 1089,– | 0,– | 1089,– |
| **CEN 59-3b IBC, painted** | C | 33404,– | on request | on request |
| Potential equalisation | C | 1089,– | 0,– | 1089,– |
| **CEN 65-2 IBC, painted** | C | 15002,– | on request | on request |
| Potential equalisation | C | 365,– | 0,– | 365,– |
| **CEN 65-2b IBC, painted** | C | 25299,– | on request | on request |
| Potential equalisation | C | 729,– | 0,– | 729,– |
| **CEN 65-3 IBC, painted** | C | 21999,– | on request | on request |
| Potential equalisation | C | 545,– | 0,– | 545,– |
| **CEN 65-3b IBC, painted** | C | 35919,– | on request | on request |
| Potential equalisation | C | 1089,– | 0,– | 1089,– |

Prices in EUR, valid EXW DE-46354 Südlohn, DE-38820 Halberstadt, unpacked
Freight charges valid CPT Denmark, islands and oversea territories excluded



BAUER GmbH
Eichendorffstr. 62
46354 Südlohn, Germany

Tel. +49 2862 70 90
info@bauer-suedlohn.com
www.bauer-suedlohn.com

Geschäftsführer
Patrick Bauer, Pascal Bauer
Amtsgericht Coesfeld HRB 5259

TÜVNORD
TÜV NORD CERT GmbH
DIN EN ISO 9001
tuev-nord.de

# Price List 0726 en-DK
# Environment / Storage

| Shelf Container Type CEN | Category | Price | Freight charges | Price including freight charges |
|---|---|---|---|---|
| **CEN 75-2, painted** | C | 16004,– | on request | on request |
| Potential equalisation | C | 365,– | 0,– | 365,– |
| **CEN 75-2b, painted** | C | 26485,– | on request | on request |
| Potential equalisation | C | 729,– | 0,– | 729,– |
| **CEN 75-3, painted** | C | 23086,– | on request | on request |
| Potential equalisation | C | 545,– | 0,– | 545,– |
| **CEN 75-3b, painted** | C | 37480,– | on request | on request |
| Potential equalisation | C | 1089,– | 0,– | 1089,– |
| **CEN 81-2, painted** | C | 16788,– | on request | on request |
| Potential equalisation | C | 365,– | 0,– | 365,– |
| **CEN 81-2b, painted** | C | 27692,– | on request | on request |
| Potential equalisation | C | 729,– | 0,– | 729,– |
| **CEN 81-3, painted** | C | 24174,– | on request | on request |
| Potential equalisation | C | 545,– | 0,– | 545,– |
| **CEN 81-3b, painted** | C | 39119,– | on request | on request |
| Potential equalisation | C | 1089,– | 0,– | 1089,– |

| Sump Tray for Skips Type CW | Category | Price | Freight charges | Price including freight charges |
|---|---|---|---|---|
| **CW 1, painted** | B | 2952,– | on request | on request |
| **CW 2, painted** | B | 3226,– | on request | on request |
| **CW 3, painted** | B | 3722,– | on request | on request |

| Sump Tray Type ECO | Category | Price | Freight charges | Price including freight charges |
|---|---|---|---|---|
| **ECO 1/200, painted** | B | 246,– | 106,– | 352,– |
| **ECO 1/200, hot-dip galvanized** | B | 256,– | 106,– | 362,– |
| **ECO 2/200, painted** | B | 261,– | 106,– | 367,– |
| **ECO 2/200, hot-dip galvanized** | B | 270,– | 106,– | 376,– |
| **ECO 4/200, painted** | B | 285,– | 106,– | 391,– |
| **ECO 4/200, hot-dip galvanized** | B | 297,– | 106,– | 403,– |
| **ECO 4/400, painted** | B | 354,– | 106,– | 460,– |
| **ECO 4/400, hot-dip galvanized** | B | 370,– | 106,– | 476,– |
| **ECO 1/1000, painted** | B | 632,– | 143,– | 775,– |
| **ECO 1/1000, hot-dip galvanized** | B | 759,– | 143,– | 902,– |
| **ECO 2/1000, painted** | B | 826,– | 196,– | 1022,– |
| **ECO 2/1000, hot-dip galvanized** | B | 915,– | 196,– | 1111,– |

| Sump Tray Type ECO-A | Category | Price | Freight charges | Price including freight charges |
|---|---|---|---|---|
| **ECO-A 1/1000, painted** | B | 831,– | 143,– | 974,– |
| **ECO-A 1/1000, hot-dip galvanized** | B | 971,– | 143,– | 1114,– |
| **ECO-A 2/1000, painted** | B | 1221,– | 254,– | 1475,– |
| **ECO-A 2/1000, hot-dip galvanized** | B | 1341,– | 254,– | 1595,– |

| Sump Tray Type ECO-S | Category | Price | Freight charges | Price including freight charges |
|---|---|---|---|---|
| **ECO-S 2/200, hot-dip galvanized** | B | 3447,– | 375,– | 3822,– |
| **ECO-S 4/200, hot-dip galvanized** | B | 4053,– | 540,– | 4593,– |

Prices in EUR, valid EXW DE-46354 Südlohn, DE-38820 Halberstadt, unpacked
Freight charges valid CPT Denmark, islands and oversea territories excluded



BAUER GmbH
Eichendorffstr. 62
46354 Südlohn, Germany

Tel. +49 2862 70 90
info@bauer-suedlohn.com
www.bauer-suedlohn.com

Geschäftsführer
Patrick Bauer, Pascal Bauer
Amtsgericht Coesfeld HRB 5259

TÜVNORD
TÜV NORD CERT GmbH
DIN EN ISO 9001
tuev-nord.de

# Price List 0726 en-DK
# Environment / Storage

| Sump Tray Type ECO-S | Category | Price | Freight charges | Price including freight charges |
|---|---|---|---|---|
| **ECO-S 4/400, hot-dip galvanized** | B | 5000,– | 540,– | 5540,– |

| Suspended Sump with Polyethylene Inlay Type EHW PE | Category | Price | Freight charges | Price including freight charges |
|---|---|---|---|---|
| **EHW 1800 PE, painted** | B | 909,– | 143,– | 1052,– |
| **EHW 1800 PE, hot-dip galvanized** | B | 922,– | 143,– | 1065,– |
| **EHW 2200 PE, painted** | B | 987,– | 143,– | 1130,– |
| **EHW 2200 PE, hot-dip galvanized** | B | 1028,– | 143,– | 1171,– |
| **EHW 2700 PE, painted** | B | 1144,– | 254,– | 1398,– |
| **EHW 2700 PE, hot-dip galvanized** | B | 1211,– | 254,– | 1465,– |
| **EHW 3300 PE, painted** | B | 1653,– | 254,– | 1907,– |
| **EHW 3300 PE, hot-dip galvanized** | B | 1727,– | 254,– | 1981,– |

| Suspended Sump Type EHW | Category | Price | Freight charges | Price including freight charges |
|---|---|---|---|---|
| **EHW 1800, painted** | B | 509,– | 143,– | 652,– |
| **EHW 1800, hot-dip galvanized** | B | 521,– | 143,– | 664,– |
| **EHW 2200, painted** | B | 564,– | 143,– | 707,– |
| **EHW 2200, hot-dip galvanized** | B | 605,– | 143,– | 748,– |
| **EHW 2700, painted** | B | 648,– | 196,– | 844,– |
| **EHW 2700, hot-dip galvanized** | B | 717,– | 196,– | 913,– |
| **EHW 3300, painted** | B | 1002,– | 254,– | 1256,– |
| **EHW 3300, hot-dip galvanized** | B | 1076,– | 254,– | 1330,– |
| **EHW 3600, painted** | B | 1050,– | 254,– | 1304,– |
| **EHW 3600, hot-dip galvanized** | B | 1131,– | 254,– | 1385,– |

| Drum Pallet Type FP | Category | Price | Freight charges | Price including freight charges |
|---|---|---|---|---|
| **FP 2, hot-dip galvanized** | B | 92,– | 106,– | 198,– |

| Drum Shelve Type FR | Category | Price | Freight charges | Price including freight charges |
|---|---|---|---|---|
| **FR-1, hot-dip galvanized** | B | 293,– | 106,– | 399,– |
| Can Stand Type GS, hot-dip galvanized | B | 65,– | 18,– | 83,– |
| Clip-on Rotating Support, galvanized | B | 85,– | 10,– | 95,– |
| **FR-2, hot-dip galvanized** | B | 375,– | 106,– | 481,– |
| Can Stand Type GS, hot-dip galvanized | B | 65,– | 18,– | 83,– |
| Clip-on Rotating Support, galvanized | B | 85,– | 10,– | 95,– |
| **FR-3, hot-dip galvanized** | B | 419,– | 106,– | 525,– |
| Can Stand Type GS, hot-dip galvanized | B | 65,– | 18,– | 83,– |
| Rotating Support RA 60, hot-dip galvanized | B | 97,– | 9,– | 106,– |

| Sump Tray Type FRA | Category | Price | Freight charges | Price including freight charges |
|---|---|---|---|---|
| **FRA-1, painted** | B | 310,– | 106,– | 416,– |
| Grid, hot-dip galvanized | B | 67,– | 16,– | 83,– |
| **FRA-1, hot-dip galvanized** | B | 367,– | 106,– | 473,– |
| Grid, hot-dip galvanized | B | 67,– | 16,– | 83,– |
| **FRA-2, painted** | B | 322,– | 106,– | 428,– |
| Grid, hot-dip galvanized | B | 132,– | 24,– | 156,– |

Prices in EUR, valid EXW DE-46354 Südlohn, DE-38820 Halberstadt, unpacked
Freight charges valid CPT Denmark, islands and oversea territories excluded



BAUER GmbH
Eichendorffstr. 62
46354 Südlohn, Germany

Tel. +49 2862 70 90
info@bauer-suedlohn.com
www.bauer-suedlohn.com

Geschäftsführer
Patrick Bauer, Pascal Bauer
Amtsgericht Coesfeld HRB 5259

TÜVNORD
TÜV NORD CERT GmbH
DIN EN ISO 9001
tuev-nord.de

# Price List 0726 en-DK
# Environment / Storage

| Sump Tray Type FRA | Category | Price | Freight charges | Price including freight charges |
|---|---|---|---|---|
| **FRA-2, hot-dip galvanized** | B | 378,– | 106,– | 484,– |
| Grid, hot-dip galvanized | B | 132,– | 24,– | 156,– |
| **FRA-3, painted** | B | 322,– | 106,– | 428,– |
| Grid, hot-dip galvanized | B | 132,– | 24,– | 156,– |
| **FRA-3, hot-dip galvanized** | B | 378,– | 106,– | 484,– |
| Grid, hot-dip galvanized | B | 132,– | 24,– | 156,– |

| Drum Shelf Type FRE/M | Category | Price | Freight charges | Price including freight charges |
|---|---|---|---|---|
| **FRE-1/M, hot-dip galvanized** | B | 225,– | 21,– | 246,– |
| Clip-on Rotating Support, galvanized | B | 85,– | 10,– | 95,– |
| Can Stand Type GS, hot-dip galvanized | B | 65,– | 18,– | 83,– |
| **FRE-2/M, hot-dip galvanized** | B | 261,– | 22,– | 283,– |
| Clip-on Rotating Support, galvanized | B | 85,– | 10,– | 95,– |
| Can Stand Type GS, hot-dip galvanized | B | 65,– | 18,– | 83,– |
| **FRE-3/M, hot-dip galvanized** | B | 279,– | 27,– | 306,– |
| Rotating Support RA 60, hot-dip galvanized | B | 97,– | 9,– | 106,– |
| Can Stand Type GS, hot-dip galvanized | B | 65,– | 18,– | 83,– |

| Can Shelf Type FRE-G/M | Category | Price | Freight charges | Price including freight charges |
|---|---|---|---|---|
| **FRE-G1/M, hot-dip galvanized** | B | 236,– | 27,– | 263,– |
| **FRE-G2/M, hot-dip galvanized** | B | 274,– | 32,– | 306,– |

| Can Shelf for Small Cans Type FRG | Category | Price | Freight charges | Price including freight charges |
|---|---|---|---|---|
| **FRG, hot-dip galvanized** | B | 381,– | 106,– | 487,– |

| Drum Stacking Pallet Type FSP-D | Category | Price | Freight charges | Price including freight charges |
|---|---|---|---|---|
| **FSP-1 D, lackiert** | B | 845,– | 143,– | 988,– |
| **FSP-1 D, hot-dip galvanized** | B | 1106,– | 143,– | 1249,– |
| **FSP-2 D, lackiert** | B | 901,– | 143,– | 1044,– |
| **FSP-2 D, hot-dip galvanized** | B | 1222,– | 143,– | 1365,– |
| **FSP-4 D, lackiert** | B | 1170,– | 143,– | 1313,– |
| **FSP-4 D, hot-dip galvanized** | B | 1615,– | 143,– | 1758,– |

| Drum Stacking Pallet Type FSP-G | Category | Price | Freight charges | Price including freight charges |
|---|---|---|---|---|
| **FSP-1 G, lackiert** | B | 821,– | 143,– | 964,– |
| **FSP-1 G, hot-dip galvanized** | B | 1089,– | 143,– | 1232,– |
| **FSP-2 G, painted** | B | 879,– | 143,– | 1022,– |
| **FSP-2 G, hot-dip galvanized** | B | 1197,– | 143,– | 1340,– |
| **FSP-4 G, painted** | B | 1148,– | 201,– | 1349,– |
| **FSP-4 G, hot-dip galvanized** | B | 1587,– | 201,– | 1788,– |

| Drum Stacking Pallet Type FSP | Category | Price | Freight charges | Price including freight charges |
|---|---|---|---|---|
| **FSP-1, painted** | B | 484,– | 106,– | 590,– |
| **FSP-1, hot-dip galvanized** | B | 727,– | 143,– | 870,– |
| **FSP-2, painted** | B | 655,– | 143,– | 798,– |

Prices in EUR, valid EXW DE-46354 Südlohn, DE-38820 Halberstadt, unpacked
Freight charges valid CPT Denmark, islands and oversea territories excluded



BAUER GmbH
Eichendorffstr. 62
46354 Südlohn, Germany

Tel. +49 2862 70 90
info@bauer-suedlohn.com
www.bauer-suedlohn.com

Geschäftsführer
Patrick Bauer, Pascal Bauer
Amtsgericht Coesfeld HRB 5259

TÜVNORD
TÜV NORD CERT GmbH
DIN EN ISO 9001
tuev-nord.de

# Price List 0726 en-DK
# Environment / Storage

| Drum Stacking Pallet Type FSP | Category | Price | Freight charges | Price including freight charges |
|---|---|---|---|---|
| **FSP-2, hot-dip galvanized** | B | 913,– | 143,– | 1056,– |
| **FSP-4, painted** | B | 746,– | 143,– | 889,– |
| **FSP-4, hot-dip galvanized** | B | 1151,– | 143,– | 1294,– |

| Hazardous Materials Depot Type GD-A | Category | Price | Freight charges | Price including freight charges |
|---|---|---|---|---|
| **GD-A, painted** | C | 762,– | 143,– | 905,– |
| Drum Support FA 60-1, hot-dip galvanized | B | 109,– | 15,– | 124,– |
| Drum Support FA 60-2, hot-dip galvanized | B | 118,– | 18,– | 136,– |
| Drum Support FA 60-3, hot-dip galvanized | B | 138,– | 21,– | 159,– |
| Can Shelf Type GR-A, galvanized | B | 138,– | 32,– | 170,– |
| Can Shelf Type GR-B, galvanized | B | 138,– | 32,– | 170,– |
| Can Shelf Type GR-C, galvanized | B | 138,– | 32,– | 170,– |
| **GD-A, hot-dip galvanized** | C | 960,– | 143,– | 1103,– |
| Drum Support FA 60-1, hot-dip galvanized | B | 109,– | 15,– | 124,– |
| Drum Support FA 60-2, hot-dip galvanized | B | 118,– | 18,– | 136,– |
| Drum Support FA 60-3, hot-dip galvanized | B | 138,– | 21,– | 159,– |
| Can Shelf Type GR-A, galvanized | B | 138,– | 32,– | 170,– |
| Can Shelf Type GR-B, galvanized | B | 138,– | 32,– | 170,– |
| Can Shelf Type GR-C, galvanized | B | 138,– | 32,– | 170,– |

| Hazardous Materials Depot Type GD-B | Category | Price | Freight charges | Price including freight charges |
|---|---|---|---|---|
| **GD-B, painted** | C | 1363,– | 143,– | 1506,– |
| Drum Support FA 60-1, hot-dip galvanized | B | 109,– | 15,– | 124,– |
| Drum Support FA 60-2, hot-dip galvanized | B | 118,– | 18,– | 136,– |
| Drum Support FA 60-3, hot-dip galvanized | B | 138,– | 21,– | 159,– |
| Can Shelf Type GR-A, galvanized | B | 138,– | 32,– | 170,– |
| Can Shelf Type GR-B, galvanized | B | 138,– | 32,– | 170,– |
| Can Shelf Type GR-C, galvanized | B | 138,– | 32,– | 170,– |
| **GD-B, hot-dip galvanized** | C | 1625,– | 143,– | 1768,– |
| Drum Support FA 60-1, hot-dip galvanized | B | 109,– | 15,– | 124,– |
| Drum Support FA 60-2, hot-dip galvanized | B | 118,– | 18,– | 136,– |
| Drum Support FA 60-3, hot-dip galvanized | B | 138,– | 21,– | 159,– |
| Can Shelf Type GR-A, galvanized | B | 138,– | 32,– | 170,– |
| Can Shelf Type GR-B, galvanized | B | 138,– | 32,– | 170,– |
| Can Shelf Type GR-C, galvanized | B | 138,– | 32,– | 170,– |

| Hazardous Materials Depot Type GD-C | Category | Price | Freight charges | Price including freight charges |
|---|---|---|---|---|
| **GD-C, painted** | C | 1163,– | 143,– | 1306,– |
| Drum Support FA 60-1, hot-dip galvanized | B | 109,– | 15,– | 124,– |
| Drum Support FA 60-2, hot-dip galvanized | B | 118,– | 18,– | 136,– |
| Drum Support FA 60-3, hot-dip galvanized | B | 138,– | 21,– | 159,– |
| Can Shelf Type GR-A, galvanized | B | 138,– | 32,– | 170,– |
| Can Shelf Type GR-B, galvanized | B | 138,– | 32,– | 170,– |
| Can Shelf Type GR-C, galvanized | B | 138,– | 32,– | 170,– |
| **GD-C, hot-dip galvanized** | C | 1314,– | 143,– | 1457,– |

Prices in EUR, valid EXW DE-46354 Südlohn, DE-38820 Halberstadt, unpacked
Freight charges valid CPT Denmark, islands and oversea territories excluded



BAUER GmbH
Eichendorffstr. 62
46354 Südlohn, Germany

Tel. +49 2862 70 90
info@bauer-suedlohn.com
www.bauer-suedlohn.com

Geschäftsführer
Patrick Bauer, Pascal Bauer
Amtsgericht Coesfeld HRB 5259

TÜVNORD
TÜV NORD CERT GmbH
DIN EN ISO 9001
tuev-nord.de

# Price List 0726 en-DK
# Environment / Storage

| Hazardous Materials Depot Type GD-C | Category | Price | Freight charges | Price including freight charges |
|---|---|---|---|---|
| Drum Support FA 60-1, hot-dip galvanized | B | 109,– | 15,– | 124,– |
| Drum Support FA 60-2, hot-dip galvanized | B | 118,– | 18,– | 136,– |
| Drum Support FA 60-3, hot-dip galvanized | B | 138,– | 21,– | 159,– |
| Can Shelf Type GR-A, galvanized | B | 138,– | 32,– | 170,– |
| Can Shelf Type GR-B, galvanized | B | 138,– | 32,– | 170,– |
| Can Shelf Type GR-C, galvanized | B | 138,– | 32,– | 170,– |

| Hazardous Materials Depot Type GD-E | Category | Price | Freight charges | Price including freight charges |
|---|---|---|---|---|
| **GD-E 2, galvanized** | C | 1562,– | 201,– | 1763,– |
| Drum Support FA 60-1, hot-dip galvanized | B | 109,– | 15,– | 124,– |
| Drum Support FA 60-2, hot-dip galvanized | B | 118,– | 18,– | 136,– |
| Drum Support FA 60-3, hot-dip galvanized | B | 138,– | 21,– | 159,– |
| Can Shelf Type GR-A, galvanized | B | 138,– | 32,– | 170,– |
| Can Shelf Type GR-B, galvanized | B | 138,– | 32,– | 170,– |
| Can Shelf Type GR-C, galvanized | B | 138,– | 32,– | 170,– |
| **GD-E 4, galvanized** | C | 1907,– | 256,– | 2163,– |
| Drum Support FA 60-1, hot-dip galvanized | B | 109,– | 15,– | 124,– |
| Drum Support FA 60-2, hot-dip galvanized | B | 118,– | 18,– | 136,– |
| Drum Support FA 60-3, hot-dip galvanized | B | 138,– | 21,– | 159,– |
| Can Shelf Type GR-A, galvanized | B | 138,– | 32,– | 170,– |
| Can Shelf Type GR-B, galvanized | B | 138,– | 32,– | 170,– |
| Can Shelf Type GR-C, galvanized | B | 138,– | 32,– | 170,– |

| Hazardous Materials Depot Type GD-E/IBC | Category | Price | Freight charges | Price including freight charges |
|---|---|---|---|---|
| **GD-E/IBC, galvanized** | C | 2367,– | 668,– | 3035,– |
| **GD-E/IBC-2, galvanized** | C | 3552,– | 426,– | 3978,– |

| Hazardous Materials Depot Type GD-N | Category | Price | Freight charges | Price including freight charges |
|---|---|---|---|---|
| **GD-N 2, galvanized** | C | 1362,– | 201,– | 1563,– |
| Intermediate Storage Level, hot-dip galvanized | C | 106,– | 18,– | 124,– |
| Drum Support FA 60-1, hot-dip galvanized | B | 109,– | 15,– | 124,– |
| Can Shelf Type GR-A, galvanized | B | 138,– | 32,– | 170,– |
| Can Shelf Type GR-B, galvanized | B | 138,– | 32,– | 170,– |
| Can Shelf Type GR-C, galvanized | B | 138,– | 32,– | 170,– |
| **GD-N 4, galvanized** | C | 1697,– | 201,– | 1898,– |
| Intermediate Storage Level, hot-dip galvanized | C | 106,– | 18,– | 124,– |
| Drum Support FA 60-1, hot-dip galvanized | B | 109,– | 15,– | 124,– |
| Drum Support FA 60-2, hot-dip galvanized | B | 118,– | 18,– | 136,– |
| Drum Support FA 200-1, hot-dip galvanized | B | 118,– | 15,– | 133,– |
| Drum Support FA 200-2, hot-dip galvanized | B | 138,– | 22,– | 160,– |
| Can Shelf Type GR-A, galvanized | B | 138,– | 32,– | 170,– |
| Can Shelf Type GR-B, galvanized | B | 138,– | 32,– | 170,– |
| Can Shelf Type GR-C, galvanized | B | 138,– | 32,– | 170,– |

Prices in EUR, valid EXW DE-46354 Südlohn, DE-38820 Halberstadt, unpacked
Freight charges valid CPT Denmark, islands and oversea territories excluded



BAUER GmbH
Eichendorffstr. 62
46354 Südlohn, Germany

Tel. +49 2862 70 90
info@bauer-suedlohn.com
www.bauer-suedlohn.com

Geschäftsführer
Patrick Bauer, Pascal Bauer
Amtsgericht Coesfeld HRB 5259

TÜVNORD
TÜV NORD CERT GmbH
DIN EN ISO 9001
tuev-nord.de

# Price List 0726 en-DK
# Environment / Storage

| Hazardous Materials DepotType GD-N/R | Category | Price | Freight charges | Price including freight charges |
|---|---|---|---|---|
| **GD-N/R 2, galvanized** | C | 1562,– | 201,– | 1763,– |
| Intermediate Storage Level, hot-dip galvanized | C | 106,– | 18,– | 124,– |
| Drum Support FA 60-1, hot-dip galvanized | B | 109,– | 15,– | 124,– |
| Can Shelf Type GR-A, galvanized | B | 138,– | 32,– | 170,– |
| Can Shelf Type GR-B, galvanized | B | 138,– | 32,– | 170,– |
| Can Shelf Type GR-C, galvanized | B | 138,– | 32,– | 170,– |
| **GD-N/R 4, galvanized** | C | 1901,– | 201,– | 2102,– |
| Intermediate Storage Level, hot-dip galvanized | C | 106,– | 18,– | 124,– |
| Drum Support FA 60-1, hot-dip galvanized | B | 109,– | 15,– | 124,– |
| Drum Support FA 60-2, hot-dip galvanized | B | 118,– | 18,– | 136,– |
| Drum Support FA 200-1, hot-dip galvanized | B | 118,– | 15,– | 133,– |
| Drum Support FA 200-2, hot-dip galvanized | B | 138,– | 22,– | 160,– |
| Can Shelf Type GR-A, galvanized | B | 138,– | 32,– | 170,– |
| Can Shelf Type GR-B, galvanized | B | 138,– | 32,– | 170,– |
| Can Shelf Type GR-C, galvanized | B | 138,– | 32,– | 170,– |

| Gas Cylinder Containers Type GFC-B | Category | Price | Freight charges | Price including freight charges |
|---|---|---|---|---|
| **GFC-B M0, painted** | B | 3406,– | 668,– | 4074,– |
| Fixture with Safety Chain to Secure Gas Cylinders, hot-dip galvanized | B | 72,– | 12,– | 84,– |
| Rack for Gas Cylinders GFG-2, galvanized | B | 204,– | 106,– | 310,– |
| **GFC-B M1, painted** | B | 3949,– | 775,– | 4724,– |
| Fixture with Safety Chain to Secure Gas Cylinders, hot-dip galvanized | B | 72,– | 12,– | 84,– |
| Rack for Gas Cylinders GFG-2, galvanized | B | 204,– | 106,– | 310,– |
| **GFC-B M2, painted** | B | 4114,– | 775,– | 4889,– |
| Fixture with Safety Chain to Secure Gas Cylinders, hot-dip galvanized | B | 72,– | 12,– | 84,– |
| Rack for Gas Cylinders GFG-2, galvanized | B | 204,– | 106,– | 310,– |
| **GFC-B M3, painted** | B | 4761,– | 775,– | 5536,– |
| Fixture with Safety Chain to Secure Gas Cylinders, hot-dip galvanized | B | 72,– | 12,– | 84,– |
| Rack for Gas Cylinders GFG-2, galvanized | B | 204,– | 106,– | 310,– |
| **GFC-B M4, painted** | B | 5355,– | 863,– | 6218,– |
| Fixture with Safety Chain to Secure Gas Cylinders, hot-dip galvanized | B | 72,– | 12,– | 84,– |
| Rack for Gas Cylinders GFG-2, galvanized | B | 204,– | 106,– | 310,– |
| **GFC-B M5, painted** | B | 7439,– | 882,– | 8321,– |
| Fixture with Safety Chain to Secure Gas Cylinders, hot-dip galvanized | B | 72,– | 12,– | 84,– |
| Rack for Gas Cylinders GFG-2, galvanized | B | 204,– | 106,– | 310,– |

| Gas Cylinder Containers Type GFC-B/W | Category | Price | Freight charges | Price including freight charges |
|---|---|---|---|---|
| **GFC-B/W M1, painted** | B | 4216,– | 775,– | 4991,– |
| Fixture with Safety Chain to Secure Gas Cylinders, hot-dip galvanized | B | 72,– | 12,– | 84,– |
| **GFC-B/W M2, painted** | B | 4421,– | 775,– | 5196,– |
| Fixture with Safety Chain to Secure Gas Cylinders, hot-dip galvanized | B | 72,– | 12,– | 84,– |
| **GFC-B/W M3, painted** | B | 5076,– | 775,– | 5851,– |
| Fixture with Safety Chain to Secure Gas Cylinders, hot-dip galvanized | B | 72,– | 12,– | 84,– |
| Rack for Gas Cylinders GFG-2, galvanized | B | 204,– | 106,– | 310,– |
| **GFC-B/W M4, painted** | B | 5675,– | 863,– | 6538,– |

Prices in EUR, valid EXW DE-46354 Südlohn, DE-38820 Halberstadt, unpacked
Freight charges valid CPT Denmark, islands and oversea territories excluded



BAUER GmbH
Eichendorffstr. 62
46354 Südlohn, Germany

Tel. +49 2862 70 90
info@bauer-suedlohn.com
www.bauer-suedlohn.com

Geschäftsführer
Patrick Bauer, Pascal Bauer
Amtsgericht Coesfeld HRB 5259

TÜVNORD
TÜV NORD CERT GmbH
DIN EN ISO 9001
tuev-nord.de

# Price List 0726 en-DK
# Environment / Storage

| Gas Cylinder Containers Type GFC-B/W | Category | Price | Freight charges | Price including freight charges |
|---|---|---|---|---|
| Fixture with Safety Chain to Secure Gas Cylinders, hot-dip galvanized | B | 72,– | 12,– | 84,– |
| Rack for Gas Cylinders GFG-2, galvanized | B | 204,– | 106,– | 310,– |
| **GFC-B/W M5, painted** | B | 7844,– | 920,– | 8764,– |
| Fixture with Safety Chain to Secure Gas Cylinders, hot-dip galvanized | B | 72,– | 12,– | 84,– |
| Rack for Gas Cylinders GFG-2, galvanized | B | 204,– | 106,– | 310,– |

| Gas Cylinder Containers Type GFC-E/G | Category | Price | Freight charges | Price including freight charges |
|---|---|---|---|---|
| **GFC-E/G M0, hot-dip galvanized** | B | 1540,– | 201,– | 1741,– |
| Fixture with Safety Chain to Secure Gas Cylinders, hot-dip galvanized | B | 40,– | 12,– | 52,– |
| Rack for Gas Cylinders GFG-2, galvanized | B | 204,– | 106,– | 310,– |
| Access Ramp Type AR, galvanized | B | 163,– | 22,– | 185,– |
| **GFC-E/G M1, hot-dip galvanized** | B | 2191,– | 775,– | 2966,– |
| Fixture with Safety Chain to Secure Gas Cylinders, hot-dip galvanized | B | 40,– | 12,– | 52,– |
| Rack for Gas Cylinders GFG-2, galvanized | B | 204,– | 106,– | 310,– |
| Access Ramp Type AR, galvanized | B | 163,– | 22,– | 185,– |
| Central Dividing Wall, galvanized | B | 87,– | 22,– | 109,– |
| **GFC-E/G M2, hot-dip galvanized** | B | 2401,– | 775,– | 3176,– |
| Fixture with Safety Chain to Secure Gas Cylinders, hot-dip galvanized | B | 40,– | 12,– | 52,– |
| Rack for Gas Cylinders GFG-2, galvanized | B | 204,– | 106,– | 310,– |
| Access Ramp Type AR, galvanized | B | 163,– | 22,– | 185,– |
| Central Dividing Wall, galvanized | B | 129,– | 32,– | 161,– |
| **GFC-E/G M3, hot-dip galvanized** | B | 2671,– | 775,– | 3446,– |
| Fixture with Safety Chain to Secure Gas Cylinders, hot-dip galvanized | B | 40,– | 12,– | 52,– |
| Rack for Gas Cylinders GFG-2, galvanized | B | 204,– | 106,– | 310,– |
| Access Ramp Type AR, galvanized | B | 163,– | 22,– | 185,– |
| Central Dividing Wall, galvanized | B | 129,– | 32,– | 161,– |
| **GFC-E/G M4, hot-dip galvanized** | B | 2895,– | 863,– | 3758,– |
| Fixture with Safety Chain to Secure Gas Cylinders, hot-dip galvanized | B | 40,– | 12,– | 52,– |
| Rack for Gas Cylinders GFG-2, galvanized | B | 204,– | 106,– | 310,– |
| Access Ramp Type AR, galvanized | B | 163,– | 22,– | 185,– |
| Central Dividing Wall, galvanized | B | 129,– | 32,– | 161,– |
| **GFC-E/G M5, hot-dip galvanized** | B | 3587,– | 863,– | 4450,– |
| Fixture with Safety Chain to Secure Gas Cylinders, hot-dip galvanized | B | 40,– | 12,– | 52,– |
| Rack for Gas Cylinders GFG-2, galvanized | B | 204,– | 106,– | 310,– |
| Access Ramp Type AR, galvanized | B | 163,– | 22,– | 185,– |
| Central Dividing Wall, galvanized | B | 191,– | 40,– | 231,– |

| Gas Cylinder Containers Type GFC-E/T | Category | Price | Freight charges | Price including freight charges |
|---|---|---|---|---|
| **GFC-E/T M0, hot-dip galvanized** | B | 1560,– | 201,– | 1761,– |
| Fixture with Safety Chain to Secure Gas Cylinders, hot-dip galvanized | B | 40,– | 12,– | 52,– |
| Rack for Gas Cylinders GFG-2, galvanized | B | 204,– | 106,– | 310,– |
| Access Ramp Type AR, galvanized | B | 163,– | 22,– | 185,– |
| **GFC-E/T M1, hot-dip galvanized** | B | 2229,– | 775,– | 3004,– |
| Fixture with Safety Chain to Secure Gas Cylinders, hot-dip galvanized | B | 40,– | 12,– | 52,– |
| Rack for Gas Cylinders GFG-2, galvanized | B | 204,– | 106,– | 310,– |

Prices in EUR, valid EXW DE-46354 Südlohn, DE-38820 Halberstadt, unpacked
Freight charges valid CPT Denmark, islands and oversea territories excluded



BAUER GmbH
Eichendorffstr. 62
46354 Südlohn, Germany

Tel. +49 2862 70 90
info@bauer-suedlohn.com
www.bauer-suedlohn.com

Geschäftsführer
Patrick Bauer, Pascal Bauer
Amtsgericht Coesfeld HRB 5259

TÜVNORD
TÜV NORD CERT GmbH
DIN EN ISO 9001
tuev-nord.de

# Price List 0726 en-DK
# Environment / Storage

| Gas Cylinder Containers Type GFC-E/T | Category | Price | Freight charges | Price including freight charges |
|---|---|---|---|---|
| Access Ramp Type AR, galvanized | B | 163,– | 22,– | 185,– |
| Central Dividing Wall, galvanized | B | 87,– | 22,– | 109,– |
| **GFC-E/T M2, hot-dip galvanized** | B | 2448,– | 775,– | 3223,– |
| Fixture with Safety Chain to Secure Gas Cylinders, hot-dip galvanized | B | 40,– | 12,– | 52,– |
| Rack for Gas Cylinders GFG-2, galvanized | B | 204,– | 106,– | 310,– |
| Access Ramp Type AR, galvanized | B | 163,– | 22,– | 185,– |
| Central Dividing Wall, galvanized | B | 129,– | 32,– | 161,– |
| **GFC-E/T M3, hot-dip galvanized** | B | 2737,– | 775,– | 3512,– |
| Fixture with Safety Chain to Secure Gas Cylinders, hot-dip galvanized | B | 40,– | 12,– | 52,– |
| Rack for Gas Cylinders GFG-2, galvanized | B | 204,– | 106,– | 310,– |
| Access Ramp Type AR, galvanized | B | 163,– | 22,– | 185,– |
| Central Dividing Wall, galvanized | B | 129,– | 32,– | 161,– |
| **GFC-E/T M4, hot-dip galvanized** | B | 2960,– | 863,– | 3823,– |
| Fixture with Safety Chain to Secure Gas Cylinders, hot-dip galvanized | B | 40,– | 12,– | 52,– |
| Rack for Gas Cylinders GFG-2, galvanized | B | 204,– | 106,– | 310,– |
| Access Ramp Type AR, galvanized | B | 163,– | 22,– | 185,– |
| Central Dividing Wall, galvanized | B | 129,– | 32,– | 161,– |
| **GFC-E/T M5, hot-dip galvanized** | B | 3678,– | 863,– | 4541,– |
| Fixture with Safety Chain to Secure Gas Cylinders, hot-dip galvanized | B | 40,– | 12,– | 52,– |
| Rack for Gas Cylinders GFG-2, galvanized | B | 204,– | 106,– | 310,– |
| Access Ramp Type AR, galvanized | B | 163,– | 22,– | 185,– |
| Central Dividing Wall, galvanized | B | 191,– | 40,– | 231,– |

| Gas Cylinder Containers Type GFC-M/D | Category | Price | Freight charges | Price including freight charges |
|---|---|---|---|---|
| **GFC-M0/D, hot-dip galvanized** | B | 1028,– | 143,– | 1171,– |
| Grid Floor, hot-dip galvanized | B | 152,– | 27,– | 179,– |
| Fixture with Safety Chain to Secure Gas Cylinders, hot-dip galvanized | B | 40,– | 12,– | 52,– |
| Rack for Gas Cylinders GFG-2, galvanized | B | 204,– | 106,– | 310,– |
| **GFC-M1/D, hot-dip galvanized** | B | 1247,– | 201,– | 1448,– |
| Grid Floor, hot-dip galvanized | B | 274,– | 106,– | 380,– |
| Fixture with Safety Chain to Secure Gas Cylinders, hot-dip galvanized | B | 40,– | 12,– | 52,– |
| Rack for Gas Cylinders GFG-2, galvanized | B | 204,– | 106,– | 310,– |
| **GFC-M2/D, hot-dip galvanized** | B | 1327,– | 201,– | 1528,– |
| Grid Floor, hot-dip galvanized | B | 375,– | 106,– | 481,– |
| Fixture with Safety Chain to Secure Gas Cylinders, hot-dip galvanized | B | 40,– | 12,– | 52,– |
| Rack for Gas Cylinders GFG-2, galvanized | B | 204,– | 106,– | 310,– |
| **GFC-M3/D, hot-dip galvanized** | B | 1498,– | 201,– | 1699,– |
| Grid Floor, hot-dip galvanized | B | 510,– | 143,– | 653,– |
| Fixture with Safety Chain to Secure Gas Cylinders, hot-dip galvanized | B | 40,– | 12,– | 52,– |
| Rack for Gas Cylinders GFG-2, galvanized | B | 204,– | 106,– | 310,– |
| **GFC-M4/D, hot-dip galvanized** | B | 1601,– | 201,– | 1802,– |
| Grid Floor, hot-dip galvanized | B | 627,– | 143,– | 770,– |
| Fixture with Safety Chain to Secure Gas Cylinders, hot-dip galvanized | B | 40,– | 12,– | 52,– |
| Rack for Gas Cylinders GFG-2, galvanized | B | 204,– | 106,– | 310,– |
| **GFC-M5/D, hot-dip galvanized** | B | 1903,– | 256,– | 2159,– |
| Grid Floor, hot-dip galvanized | B | 765,– | 143,– | 908,– |

Prices in EUR, valid EXW DE-46354 Südlohn, DE-38820 Halberstadt, unpacked
Freight charges valid CPT Denmark, islands and oversea territories excluded



BAUER GmbH
Eichendorffstr. 62
46354 Südlohn, Germany

Tel. +49 2862 70 90
info@bauer-suedlohn.com
www.bauer-suedlohn.com

Geschäftsführer
Patrick Bauer, Pascal Bauer
Amtsgericht Coesfeld HRB 5259

TÜVNORD
TÜV NORD CERT GmbH
DIN EN ISO 9001
tuev-nord.de

# Price List 0726 en-DK
# Environment / Storage

| Gas Cylinder Containers Type GFC-M/D | Category | Price | Freight charges | Price including freight charges |
|---|---|---|---|---|
| Fixture with Safety Chain to Secure Gas Cylinders, hot-dip galvanized | B | 40,– | 12,– | 52,– |
| Rack for Gas Cylinders GFG-2, galvanized | B | 204,– | 106,– | 310,– |

| Gas Cylinder Containers Type GFC-M | Category | Price | Freight charges | Price including freight charges |
|---|---|---|---|---|
| **GFC-M1, hot-dip galvanized** | B | 1101,– | 143,– | 1244,– |
| Grid Floor, hot-dip galvanized | B | 274,– | 106,– | 380,– |
| Fixture with Safety Chain to Secure Gas Cylinders, hot-dip galvanized | B | 40,– | 12,– | 52,– |
| Rack for Gas Cylinders GFG-2, galvanized | B | 204,– | 106,– | 310,– |
| **GFC-M2, hot-dip galvanized** | B | 1169,– | 201,– | 1370,– |
| Grid Floor, hot-dip galvanized | B | 375,– | 106,– | 481,– |
| Fixture with Safety Chain to Secure Gas Cylinders, hot-dip galvanized | B | 40,– | 12,– | 52,– |
| Rack for Gas Cylinders GFG-2, galvanized | B | 204,– | 106,– | 310,– |
| **GFC-M3, hot-dip galvanized** | B | 1312,– | 201,– | 1513,– |
| Grid Floor, hot-dip galvanized | B | 510,– | 143,– | 653,– |
| Fixture with Safety Chain to Secure Gas Cylinders, hot-dip galvanized | B | 40,– | 12,– | 52,– |
| Rack for Gas Cylinders GFG-2, galvanized | B | 204,– | 106,– | 310,– |
| **GFC-M4, hot-dip galvanized** | B | 1380,– | 201,– | 1581,– |
| Grid Floor, hot-dip galvanized | B | 627,– | 143,– | 770,– |
| Fixture with Safety Chain to Secure Gas Cylinders, hot-dip galvanized | B | 40,– | 12,– | 52,– |
| Rack for Gas Cylinders GFG-2, galvanized | B | 204,– | 106,– | 310,– |
| **GFC-M5, hot-dip galvanized** | B | 1602,– | 201,– | 1803,– |
| Grid Floor, hot-dip galvanized | B | 765,– | 143,– | 908,– |
| Fixture with Safety Chain to Secure Gas Cylinders, hot-dip galvanized | B | 40,– | 12,– | 52,– |
| Rack for Gas Cylinders GFG-2, galvanized | B | 204,– | 106,– | 310,– |

| Gas Cylinder Containers Type GFC-M/D-DF | Category | Price | Freight charges | Price including freight charges |
|---|---|---|---|---|
| **GFC-M1/D-DF, hot-dip galvanized** | B | 1424,– | 201,– | 1625,– |
| Grid Floor, hot-dip galvanized | B | 274,– | 106,– | 380,– |
| Fixture with Safety Chain to Secure Gas Cylinders, hot-dip galvanized | B | 40,– | 12,– | 52,– |
| Rack for Gas Cylinders GFG-2, galvanized | B | 204,– | 106,– | 310,– |
| **GFC-M2/D-DF, hot-dip galvanized** | B | 1503,– | 201,– | 1704,– |
| Grid Floor, hot-dip galvanized | B | 375,– | 106,– | 481,– |
| Fixture with Safety Chain to Secure Gas Cylinders, hot-dip galvanized | B | 40,– | 12,– | 52,– |
| Rack for Gas Cylinders GFG-2, galvanized | B | 204,– | 106,– | 310,– |
| **GFC-M3/D-DF, hot-dip galvanized** | B | 1675,– | 201,– | 1876,– |
| Grid Floor, hot-dip galvanized | B | 510,– | 143,– | 653,– |
| Fixture with Safety Chain to Secure Gas Cylinders, hot-dip galvanized | B | 40,– | 12,– | 52,– |
| Rack for Gas Cylinders GFG-2, galvanized | B | 204,– | 106,– | 310,– |
| **GFC-M4/D-DF, hot-dip galvanized** | B | 1810,– | 256,– | 2066,– |
| Grid Floor, hot-dip galvanized | B | 627,– | 143,– | 770,– |
| Fixture with Safety Chain to Secure Gas Cylinders, hot-dip galvanized | B | 40,– | 12,– | 52,– |
| Rack for Gas Cylinders GFG-2, galvanized | B | 204,– | 106,– | 310,– |
| **GFC-M5/D-DF, hot-dip galvanized** | B | 2112,– | 256,– | 2368,– |
| Grid Floor, hot-dip galvanized | B | 765,– | 143,– | 908,– |
| Fixture with Safety Chain to Secure Gas Cylinders, hot-dip galvanized | B | 40,– | 12,– | 52,– |

Prices in EUR, valid EXW DE-46354 Südlohn, DE-38820 Halberstadt, unpacked
Freight charges valid CPT Denmark, islands and oversea territories excluded



BAUER GmbH
Eichendorffstr. 62
46354 Südlohn, Germany

Tel. +49 2862 70 90
info@bauer-suedlohn.com
www.bauer-suedlohn.com

Geschäftsführer
Patrick Bauer, Pascal Bauer
Amtsgericht Coesfeld HRB 5259

TÜVNORD
TÜV NORD CERT GmbH
DIN EN ISO 9001
tuev-nord.de

# Price List 0726 en-DK
# Environment / Storage

| Gas Cylinder Containers Type GFC-M/D-DF | Category | Price | Freight charges | Price including freight charges |
|---|---|---|---|---|
| Rack for Gas Cylinders GFG-2, galvanized | B | 204,– | 106,– | 310,– |
| **GFC-M6/D-DF, hot-dip galvanized** | B | 2775,– | 335,– | 3110,– |
| Fixture with Safety Chain to Secure Gas Cylinders, hot-dip galvanized | B | 40,– | 12,– | 52,– |
| Rack for Gas Cylinders GFG-2, galvanized | B | 204,– | 106,– | 310,– |

| Gas Cylinder Containers Type GFC-M-DF | Category | Price | Freight charges | Price including freight charges |
|---|---|---|---|---|
| **GFC-M1-DF, hot-dip galvanized** | B | 1276,– | 143,– | 1419,– |
| Grid Floor, hot-dip galvanized | B | 274,– | 106,– | 380,– |
| Fixture with Safety Chain to Secure Gas Cylinders, hot-dip galvanized | B | 40,– | 12,– | 52,– |
| Rack for Gas Cylinders GFG-2, galvanized | B | 204,– | 106,– | 310,– |
| **GFC-M2-DF, hot-dip galvanized** | B | 1346,– | 201,– | 1547,– |
| Grid Floor, hot-dip galvanized | B | 375,– | 106,– | 481,– |
| Fixture with Safety Chain to Secure Gas Cylinders, hot-dip galvanized | B | 40,– | 12,– | 52,– |
| Rack for Gas Cylinders GFG-2, galvanized | B | 204,– | 106,– | 310,– |
| **GFC-M3-DF, hot-dip galvanized** | B | 1490,– | 201,– | 1691,– |
| Grid Floor, hot-dip galvanized | B | 510,– | 143,– | 653,– |
| Fixture with Safety Chain to Secure Gas Cylinders, hot-dip galvanized | B | 40,– | 12,– | 52,– |
| Rack for Gas Cylinders GFG-2, galvanized | B | 204,– | 106,– | 310,– |
| **GFC-M4-DF, hot-dip galvanized** | B | 1591,– | 201,– | 1792,– |
| Grid Floor, hot-dip galvanized | B | 627,– | 143,– | 770,– |
| Fixture with Safety Chain to Secure Gas Cylinders, hot-dip galvanized | B | 40,– | 12,– | 52,– |
| Rack for Gas Cylinders GFG-2, galvanized | B | 204,– | 106,– | 310,– |
| **GFC-M5-DF, hot-dip galvanized** | B | 1812,– | 256,– | 2068,– |
| Grid Floor, hot-dip galvanized | B | 765,– | 143,– | 908,– |
| Fixture with Safety Chain to Secure Gas Cylinders, hot-dip galvanized | B | 40,– | 12,– | 52,– |
| Rack for Gas Cylinders GFG-2, galvanized | B | 204,– | 106,– | 310,– |

| Gas Cylinder Depot Type GFD-G | Category | Price | Freight charges | Price including freight charges |
|---|---|---|---|---|
| **GFD-G 1, galvanized** | B | 429,– | 143,– | 572,– |
| **GFD-G 2, galvanized** | B | 790,– | 143,– | 933,– |

| Gas Cylinder Depot Type GFD-L | Category | Price | Freight charges | Price including freight charges |
|---|---|---|---|---|
| **GFD-L 1, galvanized** | B | 462,– | 106,– | 568,– |
| **GFD-L 2, galvanized** | B | 880,– | 143,– | 1023,– |

| Gas Cylinder Depot Type GFD-R | Category | Price | Freight charges | Price including freight charges |
|---|---|---|---|---|
| **GFD-R 2, painted** | B | 774,– | 106,– | 880,– |
| **GFD-R 2, hot-dip galvanized** | B | 798,– | 106,– | 904,– |
| **GFD-R 4, painted** | B | 879,– | 106,– | 985,– |
| **GFD-R 4, hot-dip galvanized** | B | 909,– | 106,– | 1015,– |

| Hazardous Materials Cabinet Type GS | Category | Price | Freight charges | Price including freight charges |
|---|---|---|---|---|
| **GS-1, painted** | B | 789,– | 143,– | 932,– |
| Intermediate Storage Level, galvanized | B | 90,– | 14,– | 104,– |
| **GS-1, hot-dip galvanized** | B | 849,– | 143,– | 992,– |

Prices in EUR, valid EXW DE-46354 Südlohn, DE-38820 Halberstadt, unpacked
Freight charges valid CPT Denmark, islands and oversea territories excluded



BAUER GmbH
Eichendorffstr. 62
46354 Südlohn, Germany

Tel. +49 2862 70 90
info@bauer-suedlohn.com
www.bauer-suedlohn.com

Geschäftsführer
Patrick Bauer, Pascal Bauer
Amtsgericht Coesfeld HRB 5259

TÜVNORD
TÜV NORD CERT GmbH
DIN EN ISO 9001
tuev-nord.de

# Price List 0726 en-DK
# Environment / Storage

| Hazardous Materials Cabinet Type GS | Category | Price | Freight charges | Price including freight charges |
|---|---|---|---|---|
| Intermediate Storage Level, galvanized | B | 90,– | 14,– | 104,– |
| **GS-2, painted** | B | 1049,– | 201,– | 1250,– |
| Intermediate Storage Level, galvanized | B | 90,– | 14,– | 104,– |
| **GS-2, hot-dip galvanized** | B | 1139,– | 201,– | 1340,– |
| Intermediate Storage Level, galvanized | B | 90,– | 14,– | 104,– |
| **GS-3, painted** | B | 2143,– | 256,– | 2399,– |
| **GS-3, hot-dip galvanized** | B | 2295,– | 256,– | 2551,– |
| **GS-4, painted** | B | 2154,– | 668,– | 2822,– |
| **GS-4, hot-dip galvanized** | B | 2340,– | 668,– | 3008,– |

| Gas Cylinder Wall Bracket Type GWH | Category | Price | Freight charges | Price including freight charges |
|---|---|---|---|---|
| **GWH 140-I, hot-dip galvanized** | F | 26,– | 32,– | 58,– |
| **GWH 140-II, hot-dip galvanized** | F | 40,– | 32,– | 72,– |
| **GWH 140-III, hot-dip galvanized** | F | 59,– | 32,– | 91,– |
| **GWH 230-I, hot-dip galvanized** | F | 28,– | 32,– | 60,– |
| **GWH 230-II, hot-dip galvanized** | F | 43,– | 32,– | 75,– |
| **GWH 230-III, hot-dip galvanized** | F | 65,– | 32,– | 97,– |
| **GWH 320-I, hot-dip galvanized** | F | 29,– | 32,– | 61,– |
| **GWH 320-II, hot-dip galvanized** | F | 48,– | 32,– | 80,– |
| **GWH 320-III, hot-dip galvanized** | F | 72,– | 32,– | 104,– |

| Tilting Canister Stand Type KAH | Category | Price | Freight charges | Price including freight charges |
|---|---|---|---|---|
| **KAH-5, galvanized** | A | 96,– | 32,– | 128,– |
| **KAH-25, galvanized** | A | 109,– | 32,– | 141,– |
| **KAH-60, galvanized** | A | 140,– | 32,– | 172,– |

| Spill Tray for Canisters/Small Cans Type KGW | Category | Price | Freight charges | Price including freight charges |
|---|---|---|---|---|
| **KGW 1, galvanized** | B | 92,– | 32,– | 124,– |
| **KGW 1 V4A, stainless steel 1.4571** | B | 280,– | 32,– | 312,– |
| **KGW 2, galvanized** | B | 96,– | 32,– | 128,– |
| **KGW 2 V4A, stainless steel 1.4571** | B | 322,– | 32,– | 354,– |
| **KGW 3, galvanized** | B | 100,– | 32,– | 132,– |
| **KGW 3 V4A, stainless steel 1.4571** | B | 400,– | 32,– | 432,– |
| **KGW 4, galvanized** | B | 117,– | 106,– | 223,– |
| **KGW 4 V4A, stainless steel 1.4571** | B | 472,– | 106,– | 578,– |
| **KGW 5, galvanized** | B | 161,– | 106,– | 267,– |
| **KGW 5 V4A, stainless steel 1.4571** | B | 614,– | 106,– | 720,– |

| Spill Tray for Canisters/Small Cans Type KGW/M | Category | Price | Freight charges | Price including freight charges |
|---|---|---|---|---|
| **KGW 1/M, galvanized** | B | 129,– | 32,– | 161,– |
| **KGW 1/M V4A, stainless steel 1.4571** | B | 421,– | 32,– | 453,– |
| **KGW 2/M, galvanized** | B | 137,– | 32,– | 169,– |
| **KGW 2/M V4A, stainless steel 1.4571** | B | 485,– | 32,– | 517,– |
| **KGW 3/M, galvanized** | B | 157,– | 32,– | 189,– |
| **KGW 3/M V4A, stainless steel 1.4571** | B | 610,– | 32,– | 642,– |

Prices in EUR, valid EXW DE-46354 Südlohn, DE-38820 Halberstadt, unpacked
Freight charges valid CPT Denmark, islands and oversea territories excluded



BAUER GmbH
Eichendorffstr. 62
46354 Südlohn, Germany

Tel. +49 2862 70 90
info@bauer-suedlohn.com
www.bauer-suedlohn.com

Geschäftsführer
Patrick Bauer, Pascal Bauer
Amtsgericht Coesfeld HRB 5259

TÜVNORD
TÜV NORD CERT GmbH
DIN EN ISO 9001
tuev-nord.de

# Price List 0726 en-DK
# Environment / Storage

| Spill Tray for Canisters/Small Cans Type KGW/M | Category | Price | Freight charges | Price including freight charges |
|---|---|---|---|---|
| KGW 4/M, galvanized | B | 182,– | 106,– | 288,– |
| KGW 4/M V4A, stainless steel 1.4571 | B | 730,– | 106,– | 836,– |
| KGW 5/M, galvanized | B | 235,– | 106,– | 341,– |
| KGW 5/M V4A, stainless steel 1.4571 | B | 962,– | 106,– | 1068,– |

| Spill Tray for Canisters/Small Cans on Pallets Type KGW-P | Category | Price | Freight charges | Price including freight charges |
|---|---|---|---|---|
| KGW-P 1, galvanized | B | 98,– | 32,– | 130,– |
| KGW-P 1 V4A, stainless steel 1.4571 | B | 276,– | 32,– | 308,– |
| KGW-P 2, galvanized | B | 147,– | 32,– | 179,– |
| KGW-P 2 V4A, stainless steel 1.4571 | B | 396,– | 32,– | 428,– |
| KGW-P 3, galvanized | B | 185,– | 106,– | 291,– |
| KGW-P 3 V4A, stainless steel 1.4571 | B | 607,– | 32,– | 639,– |
| KGW-P 4, galvanized | B | 175,– | 32,– | 207,– |
| KGW-P 4 V4A, stainless steel 1.4571 | B | 466,– | 32,– | 498,– |

| Spill Tray for Canisters/Small Cans on Pallets Type KGW-P/M | Category | Price | Freight charges | Price including freight charges |
|---|---|---|---|---|
| KGW-P 1/M, galvanized | B | 142,– | 32,– | 174,– |
| KGW-P 1/M V4A, stainless steel 1.4571 | B | 399,– | 32,– | 431,– |
| KGW-P 2/M, galvanized | B | 218,– | 32,– | 250,– |
| KGW-P 2/M V4A, stainless steel 1.4571 | B | 579,– | 32,– | 611,– |
| KGW-P 3/M, galvanized | B | 265,– | 106,– | 371,– |
| KGW-P 3/M V4A, stainless steel 1.4571 | B | 895,– | 106,– | 1001,– |
| KGW-P 4/M, galvanized | B | 250,– | 106,– | 356,– |
| KGW-P 4/M V4A, stainless steel 1.4571 | B | 719,– | 32,– | 751,– |

| Diesel Filling Point Type KPS | Category | Price | Freight charges | Price including freight charges |
|---|---|---|---|---|
| KPS 1, painted | B | 2966,– | on request | on request |
| KPS 2, painted | B | 3854,– | on request | on request |
| KPS 3, painted | B | 5432,– | on request | on request |

| Polyethylene Sump Tray for Pallets Type KWP-P | Category | Price | Freight charges | Price including freight charges |
|---|---|---|---|---|
| KWP-P 20, made of robust polyethylene | B | 48,– | 32,– | 80,– |
| Deck with Punched Holes LR-PE 20, robust polyethylene, black | B | 64,– | 14,– | 78,– |
| KWP-P 30, made of robust polyethylene | B | 58,– | 32,– | 90,– |
| Deck with Punched Holes LR-PE 30, robust polyethylene, black | B | 66,– | 14,– | 80,– |
| KWP-P 40, made of robust polyethylene | B | 65,– | 32,– | 97,– |
| Deck with Punched Holes LR-PE 40, robust polyethylene, black | B | 70,– | 14,– | 84,– |
| KWP-P 60, made of robust polyethylene | B | 103,– | 32,– | 135,– |
| Deck with punched holes LR-PE 60, robust polyethylene, black | B | 73,– | 14,– | 87,– |
| KWP-P 100, made of robust polyethylene | B | 117,– | 106,– | 223,– |
| Deck with punched holes LR-PE 100, robust polyethylene, black | B | 90,– | 16,– | 106,– |

| Mobile Sump Tray with Perforated Panel Type LPW | Category | Price | Freight charges | Price including freight charges |
|---|---|---|---|---|
| LPW 60-1, painted | B | 627,– | 106,– | 733,– |
| Tool Deposit | B | 32,– | 16,– | 48,– |

Prices in EUR, valid EXW DE-46354 Südlohn, DE-38820 Halberstadt, unpacked
Freight charges valid CPT Denmark, islands and oversea territories excluded



BAUER GmbH
Eichendorffstr. 62
46354 Südlohn, Germany

Tel. +49 2862 70 90
info@bauer-suedlohn.com
www.bauer-suedlohn.com

Geschäftsführer
Patrick Bauer, Pascal Bauer
Amtsgericht Coesfeld HRB 5259

TÜVNORD
TÜV NORD CERT GmbH
DIN EN ISO 9001
tuev-nord.de

# Price List 0726 en-DK
# Environment / Storage

| Mobile Sump Tray with Perforated Panel Type LPW | Category | Price | Freight charges | Price including freight charges |
|---|---|---|---|---|
| Drip Tray | B | 50,– | 16,– | 66,– |
| **LPW 60-1, hot-dip galvanized** | B | 645,– | 106,– | 751,– |
| Tool Deposit | B | 32,– | 16,– | 48,– |
| Drip Tray | B | 50,– | 16,– | 66,– |
| **LPW 60-2, painted** | B | 640,– | 106,– | 746,– |
| Tool Deposit | B | 32,– | 16,– | 48,– |
| Drip Tray | B | 50,– | 16,– | 66,– |
| **LPW 60-2, hot-dip galvanized** | B | 661,– | 106,– | 767,– |
| Tool Deposit | B | 32,– | 16,– | 48,– |
| Drip Tray | B | 50,– | 16,– | 66,– |
| **LPW 60-3, painted** | B | 646,– | 106,– | 752,– |
| Tool Deposit | B | 32,– | 16,– | 48,– |
| Drip Tray | B | 50,– | 16,– | 66,– |
| **LPW 60-3, hot-dip galvanized** | B | 667,– | 106,– | 773,– |
| Tool Deposit | B | 32,– | 16,– | 48,– |
| Drip Tray | B | 50,– | 16,– | 66,– |
| **LPW 200-1, painted** | B | 822,– | 143,– | 965,– |
| Tool Deposit | B | 32,– | 16,– | 48,– |
| Drip Tray | B | 50,– | 16,– | 66,– |
| **LPW 200-1, hot-dip galvanized** | B | 856,– | 143,– | 999,– |
| Tool Deposit | B | 32,– | 16,– | 48,– |
| Drip Tray | B | 50,– | 16,– | 66,– |
| **LPW 200-2, painted** | B | 863,– | 143,– | 1006,– |
| Tool Deposit | B | 32,– | 16,– | 48,– |
| Drip Tray | B | 50,– | 16,– | 66,– |
| **LPW 200-2, hot-dip galvanized** | B | 899,– | 143,– | 1042,– |
| Tool Deposit | B | 32,– | 16,– | 48,– |
| Drip Tray | B | 50,– | 16,– | 66,– |
| **LPW 200-3, painted** | B | 878,– | 143,– | 1021,– |
| Tool Deposit | B | 32,– | 16,– | 48,– |
| Drip Tray | B | 50,– | 16,– | 66,– |
| **LPW 200-3, hot-dip galvanized** | B | 914,– | 143,– | 1057,– |
| Tool Deposit | B | 32,– | 16,– | 48,– |
| Drip Tray | B | 50,– | 16,– | 66,– |
| **LPW 200-4, painted** | B | 1055,– | 143,– | 1198,– |
| **LPW 200-4, hot-dip galvanized** | B | 1086,– | 143,– | 1229,– |

| Modular Sump Tray Type MAW | Category | Price | Freight charges | Price including freight charges |
|---|---|---|---|---|
| **MAW, painted** | B | 336,– | 106,– | 442,– |
| **MAW, hot-dip galvanized** | B | 366,– | 106,– | 472,– |
| **Element No. 1: grid grate incl. supporTS, painted** | B | 78,– | 18,– | 96,– |
| **Element No. 2: galvanized handle + castors** | B | 138,– | 19,– | 157,– |
| **Element No. 3: runners, painted** | B | 103,– | 15,– | 118,– |
| **Element No. 3: runners, hot-dip galvanized** | B | 66,– | 15,– | 81,– |
| **Element No. 6: surround, galvanized** | B | 601,– | 106,– | 707,– |

Prices in EUR, valid EXW DE-46354 Südlohn, DE-38820 Halberstadt, unpacked
Freight charges valid CPT Denmark, islands and oversea territories excluded



BAUER GmbH
Eichendorffstr. 62
46354 Südlohn, Germany

Tel. +49 2862 70 90
info@bauer-suedlohn.com
www.bauer-suedlohn.com

Geschäftsführer
Patrick Bauer, Pascal Bauer
Amtsgericht Coesfeld HRB 5259

TÜVNORD
TÜV NORD CERT GmbH
DIN EN ISO 9001
tuev-nord.de

# Price List 0726 en-DK
# Environment / Storage

| Spline Sump Type PW | Category | Price | Freight charges | Price including freight charges |
|---|---|---|---|---|
| PW 200-2, painted | B | 245,– | 106,– | 351,– |
| PW 200-2, hot-dip galvanized | B | 235,– | 106,– | 341,– |
| PW 200-4, painted | B | 271,– | 106,– | 377,– |
| PW 200-4, hot-dip galvanized | B | 261,– | 106,– | 367,– |
| PW 400-4, painted | B | 349,– | 106,– | 455,– |
| PW 400-4, hot-dip galvanized | B | 332,– | 106,– | 438,– |

| Spline Sump Type PWE | Category | Price | Freight charges | Price including freight charges |
|---|---|---|---|---|
| PWE 200-2, painted | B | 217,– | 106,– | 323,– |
| PWE 200-2, hot-dip galvanized | B | 207,– | 106,– | 313,– |
| PWE 200-4, painted | B | 236,– | 106,– | 342,– |
| PWE 200-4, hot-dip galvanized | B | 228,– | 106,– | 334,– |
| PWE 400-4, painted | B | 288,– | 106,– | 394,– |
| PWE 400-4, hot-dip galvanized | B | 278,– | 106,– | 384,– |

| Hazardous Materials Cabinet with Roller Shutter Door Type RSG | Category | Price | Freight charges | Price including freight charges |
|---|---|---|---|---|
| RSG-1, painted | B | 1906,– | 143,– | 2049,– |
| Set of 4 Feet, height adjustable | B | 80,– | 9,– | 89,– |
| RSG-2, painted | B | 1920,– | 143,– | 2063,– |
| Set of 4 Feet, height adjustable | B | 80,– | 9,– | 89,– |
| RSG-3, painted | B | 1971,– | 143,– | 2114,– |
| Set of 4 Feet, height adjustable | B | 80,– | 9,– | 89,– |
| RSG-4, painted | B | 2109,– | 201,– | 2310,– |
| Set of 4 Feet, height adjustable | B | 80,– | 9,– | 89,– |

| Shelf Sump with Polyethylene Inlay Type RW PE | Category | Price | Freight charges | Price including freight charges |
|---|---|---|---|---|
| RW 1800 PE, painted | B | 1044,– | 143,– | 1187,– |
| RW 1800 PE, hot-dip galvanized | B | 1100,– | 143,– | 1243,– |
| RW 2200-1 PE, painted | B | 1089,– | 143,– | 1232,– |
| RW 2200-1 PE, hot-dip galvanized | B | 1147,– | 143,– | 1290,– |
| RW 2200-2 PE, painted | B | 1276,– | 143,– | 1419,– |
| RW 2200-2 PE, hot-dip galvanized | B | 1341,– | 143,– | 1484,– |
| RW 2700-1 PE, painted | B | 1108,– | 196,– | 1304,– |
| RW 2700-1 PE, hot-dip galvanized | B | 1192,– | 196,– | 1388,– |
| RW 2700-2 PE, painted | B | 1266,– | 196,– | 1462,– |
| RW 2700-2 PE, hot-dip galvanized | B | 1365,– | 196,– | 1561,– |
| RW 2700-3 PE, painted | B | 1466,– | 196,– | 1662,– |
| RW 2700-3 PE, hot-dip galvanized | B | 1592,– | 196,– | 1788,– |
| RW 3300-1 PE, painted | B | 1417,– | 196,– | 1613,– |
| RW 3300-1 PE, hot-dip galvanized | B | 1510,– | 196,– | 1706,– |
| RW 3300-2 PE, painted | B | 1535,– | 196,– | 1731,– |
| RW 3300-2 PE, hot-dip galvanized | B | 1637,– | 196,– | 1833,– |
| RW 3300-3 PE, painted | B | 1738,– | 254,– | 1992,– |
| RW 3300-3 PE, hot-dip galvanized | B | 1850,– | 254,– | 2104,– |

Prices in EUR, valid EXW DE-46354 Südlohn, DE-38820 Halberstadt, unpacked
Freight charges valid CPT Denmark, islands and oversea territories excluded



BAUER GmbH
Eichendorffstr. 62
46354 Südlohn, Germany

Tel. +49 2862 70 90
info@bauer-suedlohn.com
www.bauer-suedlohn.com

Geschäftsführer
Patrick Bauer, Pascal Bauer
Amtsgericht Coesfeld HRB 5259

TÜVNORD
TÜV NORD CERT GmbH
DIN EN ISO 9001
tuev-nord.de

# Price List 0726 en-DK
# Environment / Storage

| Shelf Sump Type RW | Category | Price | Freight charges | Price including freight charges |
|---|---|---|---|---|
| RW 1800, painted | B | 507,– | 106,– | 613,– |
| RW 1800, hot-dip galvanized | B | 561,– | 106,– | 667,– |
| RW 2200-1, painted | B | 519,– | 106,– | 625,– |
| RW 2200-1, hot-dip galvanized | B | 577,– | 106,– | 683,– |
| RW 2200-2, painted | B | 532,– | 143,– | 675,– |
| RW 2200-2, hot-dip galvanized | B | 597,– | 143,– | 740,– |
| RW 2700-1, painted | B | 528,– | 196,– | 724,– |
| RW 2700-1, hot-dip galvanized | B | 611,– | 196,– | 807,– |
| RW 2700-2, painted | B | 607,– | 196,– | 803,– |
| RW 2700-2, hot-dip galvanized | B | 706,– | 196,– | 902,– |
| RW 2700-3, painted | B | 657,– | 196,– | 853,– |
| RW 2700-3, hot-dip galvanized | B | 781,– | 196,– | 977,– |
| RW 3300-1, painted | B | 680,– | 196,– | 876,– |
| RW 3300-1, hot-dip galvanized | B | 774,– | 196,– | 970,– |
| RW 3300-2, painted | B | 748,– | 196,– | 944,– |
| RW 3300-2, hot-dip galvanized | B | 850,– | 196,– | 1046,– |
| RW 3300-3, painted | B | 834,– | 196,– | 1030,– |
| RW 3300-3, hot-dip galvanized | B | 945,– | 196,– | 1141,– |

| Shelf Sump with Polyethylene Inlay Type RW-GR PE | Category | Price | Freight charges | Price including freight charges |
|---|---|---|---|---|
| RW-GR 1800 PE, painted | B | 1178,– | 143,– | 1321,– |
| RW-GR 1800 PE, hot-dip galvanized | B | 1231,– | 143,– | 1374,– |
| RW-GR 2200-1 PE, painted | B | 1255,– | 143,– | 1398,– |
| RW-GR 2200-1 PE, hot-dip galvanized | B | 1313,– | 143,– | 1456,– |
| RW-GR 2200-2 PE, painted | B | 1443,– | 201,– | 1644,– |
| RW-GR 2200-2 PE, hot-dip galvanized | B | 1505,– | 201,– | 1706,– |
| RW-GR 2700-1 PE, painted | B | 1313,– | 254,– | 1567,– |
| RW-GR 2700-1 PE, hot-dip galvanized | B | 1395,– | 254,– | 1649,– |
| RW-GR 2700-2 PE, painted | B | 1469,– | 254,– | 1723,– |
| RW-GR 2700-2 PE, hot-dip galvanized | B | 1570,– | 254,– | 1824,– |
| RW-GR 2700-3 PE, painted | B | 1671,– | 254,– | 1925,– |
| RW-GR 2700-3 PE, hot-dip galvanized | B | 1776,– | 254,– | 2030,– |
| RW-GR 3300-1 PE, painted | B | 1790,– | 254,– | 2044,– |
| RW-GR 3300-1 PE, hot-dip galvanized | B | 1882,– | 254,– | 2136,– |
| RW-GR 3300-2 PE, painted | B | 1906,– | 254,– | 2160,– |
| RW-GR 3300-2 PE, hot-dip galvanized | B | 2018,– | 254,– | 2272,– |
| RW-GR 3300-3 PE, painted | B | 2110,– | 309,– | 2419,– |
| RW-GR 3300-3 PE, hot-dip galvanized | B | 2222,– | 309,– | 2531,– |
| RW-GR 3600-3 PE, painted | B | 2428,– | 320,– | 2748,– |
| RW-GR 3600-3 PE, hot-dip galvanized | B | 2580,– | 320,– | 2900,– |

| Shelf Sump Type RW-GR | Category | Price | Freight charges | Price including freight charges |
|---|---|---|---|---|
| RW-GR 1800, painted | B | 641,– | 143,– | 784,– |
| RW-GR 1800, hot-dip galvanized | B | 696,– | 143,– | 839,– |
| RW-GR 2200-1, painted | B | 686,– | 143,– | 829,– |

Prices in EUR, valid EXW DE-46354 Südlohn, DE-38820 Halberstadt, unpacked
Freight charges valid CPT Denmark, islands and oversea territories excluded



BAUER GmbH
Eichendorffstr. 62
46354 Südlohn, Germany

Tel. +49 2862 70 90
info@bauer-suedlohn.com
www.bauer-suedlohn.com

Geschäftsführer
Patrick Bauer, Pascal Bauer
Amtsgericht Coesfeld HRB 5259

TÜVNORD
TÜV NORD CERT GmbH
DIN EN ISO 9001
tuev-nord.de

# Price List 0726 en-DK
# Environment / Storage

| Shelf Sump Type RW-GR | Category | Price | Freight charges | Price including freight charges |
|---|---|---|---|---|
| RW-GR 2200-1, hot-dip galvanized | B | 745,– | 143,– | 888,– |
| RW-GR 2200-2, painted | B | 700,– | 201,– | 901,– |
| RW-GR 2200-2, hot-dip galvanized | B | 761,– | 201,– | 962,– |
| RW-GR 2700-1, painted | B | 732,– | 196,– | 928,– |
| RW-GR 2700-1, hot-dip galvanized | B | 815,– | 254,– | 1069,– |
| RW-GR 2700-2, painted | B | 811,– | 254,– | 1065,– |
| RW-GR 2700-2, hot-dip galvanized | B | 911,– | 254,– | 1165,– |
| RW-GR 2700-3, painted | B | 861,– | 254,– | 1115,– |
| RW-GR 2700-3, hot-dip galvanized | B | 966,– | 254,– | 1220,– |
| RW-GR 3300-1, painted | B | 1052,– | 254,– | 1306,– |
| RW-GR 3300-1, hot-dip galvanized | B | 1146,– | 254,– | 1400,– |
| RW-GR 3300-2, painted | B | 1119,– | 254,– | 1373,– |
| RW-GR 3300-2, hot-dip galvanized | B | 1230,– | 254,– | 1484,– |
| RW-GR 3300-3, painted | B | 1206,– | 254,– | 1460,– |
| RW-GR 3300-3, hot-dip galvanized | B | 1317,– | 254,– | 1571,– |
| RW-GR 3600-3, painted | B | 1330,– | 254,– | 1584,– |
| RW-GR 3600-3, hot-dip galvanized | B | 1483,– | 254,– | 1737,– |

| Safety Cabinet Type SIW | Category | Price | Freight charges | Price including freight charges |
|---|---|---|---|---|
| SIW 1005 | B | 596,– | 106,– | 702,– |
| SIW 2005 | B | 751,– | 143,– | 894,– |

| Diesel Filling Point Type TAW | Category | Price | Freight charges | Price including freight charges |
|---|---|---|---|---|
| TAW 1, painted | B | 2448,– | on request | on request |
| TAW 2, painted | B | 3195,– | on request | on request |
| TAW 3, painted | B | 4603,– | on request | on request |

| Environmental Shelve Type UR | Category | Price | Freight charges | Price including freight charges |
|---|---|---|---|---|
| UR-G 2200, painted | B | 1827,– | 259,– | 2086,– |
| Grid Set, hot-dip galvanized | B | 198,– | 106,– | 304,– |
| Crash Guard | B | 75,– | 9,– | 84,– |
| UR-G 2700, painted | B | 1968,– | 259,– | 2227,– |
| Grid Set, hot-dip galvanized | B | 245,– | 106,– | 351,– |
| Crash Guard | B | 75,– | 9,– | 84,– |
| UR-G 3300, painted | B | 2749,– | 309,– | 3058,– |
| Grid Set, hot-dip galvanized | B | 297,– | 106,– | 403,– |
| Crash Guard | B | 75,– | 9,– | 84,– |
| UR-A 2200, painted | B | 1395,– | 259,– | 1654,– |
| Grid Set, hot-dip galvanized | B | 198,– | 106,– | 304,– |
| Crash Guard | B | 75,– | 9,– | 84,– |
| UR-A 2700, painted | B | 1535,– | 259,– | 1794,– |
| Grid Set, hot-dip galvanized | B | 245,– | 106,– | 351,– |
| Crash Guard | B | 75,– | 9,– | 84,– |
| UR-A 3300, painted | B | 2317,– | 309,– | 2626,– |
| Grid Set, hot-dip galvanized | B | 297,– | 106,– | 403,– |

Prices in EUR, valid EXW DE-46354 Südlohn, DE-38820 Halberstadt, unpacked
Freight charges valid CPT Denmark, islands and oversea territories excluded



BAUER GmbH
Eichendorffstr. 62
46354 Südlohn, Germany

Tel. +49 2862 70 90
info@bauer-suedlohn.com
www.bauer-suedlohn.com

Geschäftsführer
Patrick Bauer, Pascal Bauer
Amtsgericht Coesfeld HRB 5259

TÜVNORD
TÜV NORD CERT GmbH
DIN EN ISO 9001
tuev-nord.de

# Price List 0726 en-DK
# Environment / Storage

| Environmental Shelve Type UR | Category | Price | Freight charges | Price including freight charges |
|---|---|---|---|---|
| Crash Guard | B | 75,– | 9,– | 84,– |

| Stainless Steel Sump Tray Type VAW | Category | Price | Freight charges | Price including freight charges |
|---|---|---|---|---|
| **VAW-1, stainless steel 1.4571** | B | 990,– | 106,– | 1096,– |
| Grid, stainless steel 1.4571 | B | 494,– | 14,– | 508,– |
| Grid, hot-dip galvanized | B | 71,– | 14,– | 85,– |
| **VAW-2, stainless steel 1.4571** | B | 1079,– | 106,– | 1185,– |
| Grid, stainless steel 1.4571 | B | 731,– | 16,– | 747,– |
| Grid, hot-dip galvanized | B | 95,– | 38,– | 133,– |
| **VAW-4/A, stainless steel 1.4571** | B | 1236,– | 106,– | 1342,– |
| Grid, stainless steel 1.4571 | B | 1061,– | 22,– | 1083,– |
| Grid, hot-dip galvanized | B | 124,– | 22,– | 146,– |
| **VAW-4/B, stainless steel 1.4571** | B | 1511,– | 106,– | 1617,– |
| Grid, stainless steel 1.4571 | B | 1461,– | 27,– | 1488,– |
| Grid, hot-dip galvanized | B | 169,– | 27,– | 196,– |
| **VAW 1000 (Stainless Steel Grid), stainless steel 1.4571** | B | 3909,– | 171,– | 4080,– |
| **VAW 1000 (Hot-dip Galvanized Grid), stainless steel 1.4571** | B | 2868,– | 171,– | 3039,– |
| **VAW 1000-2 (Stainless Steel Grid), stainless steel 1.4571** | B | 5472,– | 302,– | 5774,– |
| **VAW 1000-2 (Hot-dip Galvanized Grid), stainless steel 1.4571** | B | 3561,– | 302,– | 3863,– |

| Heating Chamber Type WK | Category | Price | Freight charges | Price including freight charges |
|---|---|---|---|---|
| **WK 29-2 E65, painted** | C | 30688,– | on request | on request |
| **WK 29-2 E85, painted** | C | 30859,– | on request | on request |
| **WK 57-2 E65, painted** | C | 43080,– | on request | on request |
| **WK 57-2 E85, painted** | C | 45540,– | on request | on request |

| Sump Tray Type WM | Category | Price | Freight charges | Price including freight charges |
|---|---|---|---|---|
| **WM-2/200, hot-dip galvanized** | B | 290,– | 106,– | 396,– |
| Drum Support FA 60-1, hot-dip galvanized | B | 109,– | 15,– | 124,– |
| Drum Support FA 60-2, hot-dip galvanized | B | 118,– | 18,– | 136,– |
| Drum Support FA 60-3, hot-dip galvanized | B | 138,– | 21,– | 159,– |
| Drum Support FA 200-1, hot-dip galvanized | B | 118,– | 15,– | 133,– |
| Can Shelf Type GR-A, galvanized | B | 138,– | 32,– | 170,– |
| Can Shelf Type GR-B, galvanized | B | 138,– | 32,– | 170,– |
| Can Shelf Type GR-C, galvanized | B | 138,– | 32,– | 170,– |
| **WM-4/200, hot-dip galvanized** | B | 330,– | 106,– | 436,– |
| Drum Support FA 60-1, hot-dip galvanized | B | 109,– | 15,– | 124,– |
| Drum Support FA 60-2, hot-dip galvanized | B | 118,– | 18,– | 136,– |
| Drum Support FA 60-3, hot-dip galvanized | B | 138,– | 21,– | 159,– |
| Drum Support FA 200-1, hot-dip galvanized | B | 118,– | 15,– | 133,– |
| Drum Support FA 200-2, hot-dip galvanized | B | 138,– | 22,– | 160,– |
| Can Shelf Type GR-A, galvanized | B | 138,– | 32,– | 170,– |
| Can Shelf Type GR-B, galvanized | B | 138,– | 32,– | 170,– |
| Can Shelf Type GR-C, galvanized | B | 138,– | 32,– | 170,– |
| **WM-4/400, hot-dip galvanized** | B | 396,– | 143,– | 539,– |

Prices in EUR, valid EXW DE-46354 Südlohn, DE-38820 Halberstadt, unpacked
Freight charges valid CPT Denmark, islands and oversea territories excluded



BAUER GmbH
Eichendorffstr. 62
46354 Südlohn, Germany

Tel. +49 2862 70 90
info@bauer-suedlohn.com
www.bauer-suedlohn.com

Geschäftsführer
Patrick Bauer, Pascal Bauer
Amtsgericht Coesfeld HRB 5259

TÜVNORD
TÜV NORD CERT GmbH
DIN EN ISO 9001
tuev-nord.de

# Price List 0726 en-DK
# Environment / Storage

| Sump Tray Type WO | Category | Price | Freight charges | Price including freight charges |
|---|---|---|---|---|
| **WO-2/200, hot-dip galvanized** | B | 221,– | 106,– | 327,– |
| **WO-4/200, hot-dip galvanized** | B | 240,– | 106,– | 346,– |
| **WO-4/400, hot-dip galvanized** | B | 309,– | 106,– | 415,– |

| Polyethylene Sump Pallet Type WP | Category | Price | Freight charges | Price including freight charges |
|---|---|---|---|---|
| **WP 1/11, made of robust polyethylene** | B | 1089,– | 106,– | 1195,– |
| **WP 2/11, made of robust polyethylene** | B | 1377,– | 106,– | 1483,– |
| Dispensing Tray VB 2, robust polyethylene, blue | B | 158,– | 32,– | 190,– |

| Polyethylene Sump Pallet Type WPA-PE | Category | Price | Freight charges | Price including freight charges |
|---|---|---|---|---|
| **WPA-PE 2/2, made of robust polyethylene** | B | 324,– | 106,– | 430,– |
| **WPA-PE 4/2, made of robust polyethylene** | B | 512,– | 106,– | 618,– |

| Polyethylene Sump Pallet Type WP-PE | Category | Price | Freight charges | Price including freight charges |
|---|---|---|---|---|
| **WP-PE 1/11, made of robust polyethylene** | B | 1179,– | 106,– | 1285,– |
| Dispensing Tray VB 1, robust polyethylene, blue | B | 169,– | 32,– | 201,– |
| **WP-PE 2/11, made of robust polyethylene** | B | 1560,– | 196,– | 1756,– |
| Dispensing Tray VB 2, robust polyethylene, blue | B | 158,– | 32,– | 190,– |
| **WP-PE 2/2, made of robust polyethylene** | B | 301,– | 106,– | 407,– |
| **WP-PE 4/2, made of robust polyethylene** | B | 469,– | 106,– | 575,– |
| **WP-PE 4/4, made of robust polyethylene** | B | 487,– | 106,– | 593,– |
| **WP-PE 8/11, made of robust polyethylene** | B | 1560,– | 196,– | 1756,– |

| Mobile Polyethylene Sump Tray Type WPT | Category | Price | Freight charges | Price including freight charges |
|---|---|---|---|---|
| **WPT 230, made of robust polyethylene** | B | 538,– | 106,– | 644,– |

Prices in EUR, valid EXW DE-46354 Südlohn, DE-38820 Halberstadt, unpacked
Freight charges valid CPT Denmark, islands and oversea territories excluded



BAUER GmbH
Eichendorffstr. 62
46354 Südlohn, Germany

Tel. +49 2862 70 90
info@bauer-suedlohn.com
www.bauer-suedlohn.com

Geschäftsführer
Patrick Bauer, Pascal Bauer
Amtsgericht Coesfeld HRB 5259

TÜVNORD
TÜV NORD CERT GmbH
DIN EN ISO 9001
tuev-nord.de

# Price List 0726 en-DK
# Hazardous Materials Containers

| Fluorescent Tube Box Type AL-D | Category | Price | Freight charges | Price including freight charges |
|---|---|---|---|---|
| **AL-D 150, aluminium** | C | 518,– | 106,– | 624,– |
| **AL-D 200, aluminium** | C | 571,– | 106,– | 677,– |

| Collecting Container Type ASB | Category | Price | Freight charges | Price including freight charges |
|---|---|---|---|---|
| **ASB 250, hot-dip galvanized** | C | 2038,– | 201,– | 2239,– |
| **ASB 450-I, hot-dip galvanized** | C | 2155,– | 201,– | 2356,– |

| Special Waste Container Type ASK | Category | Price | Freight charges | Price including freight charges |
|---|---|---|---|---|
| **ASK 540-4, hot-dip galvanized** | C | on request | on request | on request |

| Duo-Container Type DC | Category | Price | Freight charges | Price including freight charges |
|---|---|---|---|---|
| **DC 450, hot-dip galvanized** | C | 2347,– | on request | on request |
| Stainless steel strainer | D | 118,– | 9,– | 127,– |
| Wing nut spanner for M12, hot-dip galvanized | F | 35,– | 15,– | 50,– |
| **DC 1000, hot-dip galvanized** | C | 2493,– | on request | on request |
| Stainless steel strainer | D | 118,– | 9,– | 127,– |
| Wing nut spanner for M12, hot-dip galvanized | F | 35,– | 15,– | 50,– |

| Lithium-Ion Storage Container Type LIL | Category | Price | Freight charges | Price including freight charges |
|---|---|---|---|---|
| **LIL 30, hot-dip galvanized** | B | 1937,– | 106,– | 2043,– |
| **LIL 90, hot-dip galvanized** | B | 2816,– | 143,– | 2959,– |
| Castor Set, polyamide, Load capacity 1050 kg / castor set | A | 156,– | 15,– | 171,– |
| **LIL 220, hot-dip galvanized** | B | 4864,– | 201,– | 5065,– |
| Castor Set, polyamide, Load capacity 1050 kg / castor set | A | 156,– | 15,– | 171,– |
| **LIL 280, hot-dip galvanized** | B | 5884,– | 201,– | 6085,– |
| Castor Set, polyamide, Load capacity 1050 kg / castor set | A | 156,– | 15,– | 171,– |
| **LIL 340, hot-dip galvanized** | B | 6792,– | 201,– | 6993,– |
| Castor Set, polyamide, Load capacity 1050 kg / castor set | A | 156,– | 15,– | 171,– |

| MobiCont Type M 800 | Category | Price | Freight charges | Price including freight charges |
|---|---|---|---|---|
| **M 800, painted** | C | 1389,– | 201,– | 1590,– |
| Level Indicator | C | 220,– | 9,– | 229,– |
| Funnel for filling, PP | D | 68,– | 9,– | 77,– |
| Filling/Extraction lid | C | 68,– | 9,– | 77,– |
| Lid, galvanized, without a lock | C | 195,– | 15,– | 210,– |
| Lid, galvanized, with square lock | C | 242,– | 18,– | 260,– |
| Lid, galvanized, with cylinder lock | C | 242,– | 18,– | 260,– |
| Castor Set, polyamide, Load capacity 1350 kg / castor set | A | 192,– | 15,– | 207,– |
| Hand Pump K 10 C, connects to drum thread, suitable for fuels and heating fuel | C | 95,– | 14,– | 109,– |
| Hose Kit (1.5 m) for Hand Pump Type K 10 C, suitable for diesel and fuel | C | 68,– | 14,– | 82,– |
| Hose Kit (3 m) for Hand Pump Type K 10 C, suitable for diesel and fuel | C | 96,– | 15,– | 111,– |

Prices in EUR, valid EXW DE-46354 Südlohn, DE-38820 Halberstadt, unpacked
Freight charges valid CPT Denmark, islands and oversea territories excluded



BAUER GmbH
Eichendorffstr. 62
46354 Südlohn, Germany

Tel. +49 2862 70 90
info@bauer-suedlohn.com
www.bauer-suedlohn.com

Geschäftsführer
Patrick Bauer, Pascal Bauer
Amtsgericht Coesfeld HRB 5259

TÜVNORD
TÜV NORD CERT GmbH
DIN EN ISO 9001
tuev-nord.de

# Price List 0726 en-DK
# Hazardous Materials Containers

| MobiCont Type M 800 | Category | Price | Freight charges | Price including freight charges |
|---|---|---|---|---|
| Hose Kit (4 m) for Hand Pump Type K 10 C, suitable for diesel and fuel | C | 109,– | 15,– | 124,– |
| Electric Pump TecPump 400 DC 12V | C | 510,– | 15,– | 525,– |
| Electric Pump TecPump 400 DC 24V | C | 510,– | 15,– | 525,– |
| Electric Pump TecPump 600 AC 230V | C | 510,– | 15,– | 525,– |
| **M 800, hot-dip galvanized** | C | 1483,– | 201,– | 1684,– |
| Level Indicator | C | 220,– | 9,– | 229,– |
| Funnel for filling, PP | D | 68,– | 9,– | 77,– |
| Filling/Extraction lid | C | 68,– | 9,– | 77,– |
| Lid, galvanized, without a lock | C | 195,– | 15,– | 210,– |
| Lid, galvanized, with square lock | C | 242,– | 18,– | 260,– |
| Lid, galvanized, with cylinder lock | C | 242,– | 18,– | 260,– |
| Castor Set, polyamide, Load capacity 1350 kg / castor set | A | 192,– | 15,– | 207,– |
| Hand Pump K 10 C, connects to drum thread, suitable for fuels and heating fuel | C | 95,– | 14,– | 109,– |
| Hose Kit (1.5 m) for Hand Pump Type K 10 C, suitable for diesel and fuel | C | 68,– | 14,– | 82,– |
| Hose Kit (3 m) for Hand Pump Type K 10 C, suitable for diesel and fuel | C | 96,– | 15,– | 111,– |
| Hose Kit (4 m) for Hand Pump Type K 10 C, suitable for diesel and fuel | C | 109,– | 15,– | 124,– |
| Electric Pump TecPump 400 DC 12V | C | 510,– | 15,– | 525,– |
| Electric Pump TecPump 400 DC 24V | C | 510,– | 15,– | 525,– |
| Electric Pump TecPump 600 AC 230V | C | 510,– | 15,– | 525,– |

| MobiCont Type MD | Category | Price | Freight charges | Price including freight charges |
|---|---|---|---|---|
| **MD 800, painted** | C | 1934,– | 201,– | 2135,– |
| Level Indicator | C | 220,– | 9,– | 229,– |
| Hand Pump K 10 C, connects to drum thread, suitable for fuels and heating fuel | C | 95,– | 14,– | 109,– |
| Hose Kit (1.5 m) for Hand Pump Type K 10 C, suitable for diesel and fuel | C | 68,– | 14,– | 82,– |
| Hose Kit (3 m) for Hand Pump Type K 10 C, suitable for diesel and fuel | C | 96,– | 15,– | 111,– |
| Hose Kit (4 m) for Hand Pump Type K 10 C, suitable for diesel and fuel | C | 109,– | 15,– | 124,– |
| Electric Pump TecPump 400 DC 12V | C | 510,– | 15,– | 525,– |
| Electric Pump TecPump 400 DC 24V | C | 510,– | 15,– | 525,– |
| Electric Pump TecPump 600 AC 230V | C | 510,– | 15,– | 525,– |
| **MD 800, hot-dip galvanized** | C | 2025,– | 201,– | 2226,– |
| Level Indicator | C | 220,– | 9,– | 229,– |
| Hand Pump K 10 C, connects to drum thread, suitable for fuels and heating fuel | C | 95,– | 14,– | 109,– |
| Hose Kit (1.5 m) for Hand Pump Type K 10 C, suitable for diesel and fuel | C | 68,– | 14,– | 82,– |
| Hose Kit (3 m) for Hand Pump Type K 10 C, suitable for diesel and fuel | C | 96,– | 15,– | 111,– |
| Hose Kit (4 m) for Hand Pump Type K 10 C, suitable for diesel and fuel | C | 109,– | 15,– | 124,– |
| Electric Pump TecPump 400 DC 12V | C | 510,– | 15,– | 525,– |
| Electric Pump TecPump 400 DC 24V | C | 510,– | 15,– | 525,– |
| Electric Pump TecPump 600 AC 230V | C | 510,– | 15,– | 525,– |

| MobiCont Type MO | Category | Price | Freight charges | Price including freight charges |
|---|---|---|---|---|
| **MO 800, painted** | C | on request | on request | on request |
| Level Indicator | C | 220,– | 9,– | 229,– |
| **MO 800, hot-dip galvanized** | C | on request | on request | on request |
| Level Indicator | C | 220,– | 9,– | 229,– |

Prices in EUR, valid EXW DE-46354 Südlohn, DE-38820 Halberstadt, unpacked
Freight charges valid CPT Denmark, islands and oversea territories excluded



BAUER GmbH
Eichendorffstr. 62
46354 Südlohn, Germany

Tel. +49 2862 70 90
info@bauer-suedlohn.com
www.bauer-suedlohn.com

Geschäftsführer
Patrick Bauer, Pascal Bauer
Amtsgericht Coesfeld HRB 5259

TÜVNORD
TÜV NORD CERT GmbH
DIN EN ISO 9001
tuev-nord.de

# Price List 0726 en-DK
# Hazardous Materials Containers

| Fuel Container Type MT | Category | Price | Freight charges | Price including freight charges |
|---|---|---|---|---|
| **MT 450, hot-dip galvanized** | C | 2223,– | 201,– | 2424,– |
| Level Indicator | C | 220,– | 9,– | 229,– |
| Hand Pump K 10 C, connects to drum thread, suitable for fuels and heating fuel | C | 95,– | 14,– | 109,– |
| Digital Flow Counter FMT 3 with screwed joints | C | 320,– | 9,– | 329,– |
| Electric Pump TecPump 400 DC 12V | C | 510,– | 12,– | 522,– |
| Electric Pump TecPump 400 DC 24V | C | 510,– | 12,– | 522,– |
| Electric Pump TecPump 600 AC 230V | C | 510,– | 12,– | 522,– |
| Counter Z 400, Retrofit Kit for Electric Pumps TecPump 400 DC 12V, 400 DC 24V and 600 AC 230V | C | 159,– | 9,– | 168,– |
| **MT 600, hot-dip galvanized** | C | 2644,– | 201,– | 2845,– |
| Level Indicator | C | 220,– | 9,– | 229,– |
| Hand Pump K 10 C, connects to drum thread, suitable for fuels and heating fuel | C | 95,– | 14,– | 109,– |
| Digital Flow Counter FMT 3 with screwed joints | C | 320,– | 9,– | 329,– |
| Electric Pump TecPump 400 DC 12V | C | 510,– | 12,– | 522,– |
| Electric Pump TecPump 400 DC 24V | C | 510,– | 12,– | 522,– |
| Electric Pump TecPump 600 AC 230V | C | 510,– | 12,– | 522,– |
| Counter Z 400, Retrofit Kit for Electric Pumps TecPump 400 DC 12V, 400 DC 24V and 600 AC 230V | C | 159,– | 9,– | 168,– |
| **MT 1000, hot-dip galvanized** | C | 2858,– | 256,– | 3114,– |
| Level Indicator | C | 220,– | 9,– | 229,– |
| Hand Pump K 10 C, connects to drum thread, suitable for fuels and heating fuel | C | 95,– | 14,– | 109,– |
| Digital Flow Counter FMT 3 with screwed joints | C | 320,– | 9,– | 329,– |
| Electric Pump TecPump 400 DC 12V | C | 510,– | 12,– | 522,– |
| Electric Pump TecPump 400 DC 24V | C | 510,– | 12,– | 522,– |
| Electric Pump TecPump 600 AC 230V | C | 510,– | 12,– | 522,– |
| Counter Z 400, Retrofit Kit for Electric Pumps TecPump 400 DC 12V, 400 DC 24V and 600 AC 230V | C | 159,– | 9,– | 168,– |

| MobiCont Type MW | Category | Price | Freight charges | Price including freight charges |
|---|---|---|---|---|
| **MW 800, painted** | C | 1783,– | 201,– | 1984,– |
| Level Indicator | C | 220,– | 9,– | 229,– |
| Filling coupling | C | 53,– | 8,– | 61,– |
| Tank heating, 220 W | C | 384,– | 12,– | 396,– |
| Tank fitting | B | 67,– | 9,– | 76,– |
| Anti-siphon valve | D | 71,– | 8,– | 79,– |
| Aeration/Vent valve | C | 27,– | 8,– | 35,– |
| **MW 800, hot-dip galvanized** | C | 1877,– | 201,– | 2078,– |
| Level Indicator | C | 220,– | 9,– | 229,– |
| Filling coupling | C | 53,– | 8,– | 61,– |
| Tank heating, 220 W | C | 384,– | 12,– | 396,– |
| Tank fitting | B | 67,– | 9,– | 76,– |
| Anti-siphon valve | D | 71,– | 8,– | 79,– |
| Aeration/Vent valve | C | 27,– | 8,– | 35,– |

| Special Waste Container Type SAF | Category | Price | Freight charges | Price including freight charges |
|---|---|---|---|---|
| **SAF 450, hot-dip galvanized** | C | 1136,– | on request | on request |
| **SAF 600, hot-dip galvanized** | C | 1136,– | on request | on request |
| **SAF 1000, hot-dip galvanized** | C | 1136,– | on request | on request |

Prices in EUR, valid EXW DE-46354 Südlohn, DE-38820 Halberstadt, unpacked
Freight charges valid CPT Denmark, islands and oversea territories excluded



BAUER GmbH
Eichendorffstr. 62
46354 Südlohn, Germany

Tel. +49 2862 70 90
info@bauer-suedlohn.com
www.bauer-suedlohn.com

Geschäftsführer
Patrick Bauer, Pascal Bauer
Amtsgericht Coesfeld HRB 5259

TÜVNORD
TÜV NORD CERT GmbH
DIN EN ISO 9001
tuev-nord.de

# Price List 0726 en-DK
# Hazardous Materials Containers

| Large Salvage Packaging Type SAG | Category | Price | Freight charges | Price including freight charges |
|---|---|---|---|---|
| **SAG 800, hot-dip galvanized** | C | 1141,– | 201,– | 1342,– |
| **SAG 1500, hot-dip galvanized** | C | 2151,– | on request | on request |
| Polyethylene sacks, 25 pieces on roll | C | 187,– | 41,– | 228,– |
| **SAG 2100, hot-dip galvanized** | C | 2257,– | on request | on request |
| Polyethylene sacks, 25 pieces on roll | C | 187,– | 41,– | 228,– |
| **SAG 2700, hot-dip galvanized** | C | 2331,– | on request | on request |
| Polyethylene sacks, 25 pieces on roll | C | 187,– | 41,– | 228,– |

| Special Waste Container Type SAP | Category | Price | Freight charges | Price including freight charges |
|---|---|---|---|---|
| **SAP 450, hot-dip galvanized** | C | 953,– | on request | on request |
| Polyethylene sacks, 50 pieces on roll - 0,085 mm | C | 139,– | 62,– | 201,– |
| Polyethylene sacks, 50 pieces on roll - 0,16 mm | C | 246,– | 106,– | 352,– |
| **SAP 600, hot-dip galvanized** | C | 953,– | on request | on request |
| Polyethylene sacks, 50 pieces on roll - 0,085 mm | C | 139,– | 62,– | 201,– |
| Polyethylene sacks, 50 pieces on roll - 0,16 mm | C | 246,– | 106,– | 352,– |
| **SAP 800, hot-dip galvanized** | C | 953,– | on request | on request |
| Polyethylene sacks, 50 pieces on roll - 0,085 mm | C | 139,– | 62,– | 201,– |
| Polyethylene sacks, 50 pieces on roll - 0,16 mm | C | 246,– | 106,– | 352,– |

| Special Waste Container Type SAP-1 | Category | Price | Freight charges | Price including freight charges |
|---|---|---|---|---|
| **SAP 450-1, hot-dip galvanized** | C | 891,– | on request | on request |
| Polyethylene sacks, 50 pieces on roll - 0,085 mm | C | 139,– | 62,– | 201,– |
| Polyethylene sacks, 50 pieces on roll - 0,16 mm | C | 246,– | 106,– | 352,– |
| **SAP 600-1, hot-dip galvanized** | C | 891,– | on request | on request |
| Polyethylene sacks, 50 pieces on roll - 0,085 mm | C | 139,– | 62,– | 201,– |
| Polyethylene sacks, 50 pieces on roll - 0,16 mm | C | 246,– | 106,– | 352,– |
| **SAP 800-1, hot-dip galvanized** | C | 891,– | on request | on request |
| Polyethylene sacks, 50 pieces on roll - 0,085 mm | C | 139,– | 62,– | 201,– |
| Polyethylene sacks, 50 pieces on roll - 0,16 mm | C | 246,– | 106,– | 352,– |
| **SAP 800-3, hot-dip galvanized** | C | 874,– | on request | on request |
| Polyethylene sacks, 50 pieces on roll - 0,085 mm | C | 139,– | 62,– | 201,– |
| Polyethylene sacks, 50 pieces on roll - 0,16 mm | C | 246,– | 106,– | 352,– |

| Used Battery Container Type SAP 600 K | Category | Price | Freight charges | Price including freight charges |
|---|---|---|---|---|
| **SAP 600 K, hot-dip galvanized** | C | 1286,– | on request | on request |

| Used Battery Container Type SAP 601 K | Category | Price | Freight charges | Price including freight charges |
|---|---|---|---|---|
| **SAP 601 K, hot-dip galvanized** | C | 1141,– | on request | on request |

| Special Waste Container Type SAS | Category | Price | Freight charges | Price including freight charges |
|---|---|---|---|---|
| **SAS 800, hot-dip galvanized** | C | 963,– | on request | on request |

| Hazardous Materials Container Type SF | Category | Price | Freight charges | Price including freight charges |
|---|---|---|---|---|
| **SF 240, hot-dip galvanized** | C | on request | on request | on request |

Prices in EUR, valid EXW DE-46354 Südlohn, DE-38820 Halberstadt, unpacked
Freight charges valid CPT Denmark, islands and oversea territories excluded



BAUER GmbH
Eichendorffstr. 62
46354 Südlohn, Germany

Tel. +49 2862 70 90
info@bauer-suedlohn.com
www.bauer-suedlohn.com

Geschäftsführer
Patrick Bauer, Pascal Bauer
Amtsgericht Coesfeld HRB 5259

TÜVNORD
TÜV NORD CERT GmbH
DIN EN ISO 9001
tuev-nord.de

# Price List 0726 en-DK
# Hazardous Materials Containers

| Fluorescent Tube Box Type SL | Category | Price | Freight charges | Price including freight charges |
|---|---|---|---|---|
| **SL 150, painted** | C | 688,– | 143,– | 831,– |
| **SL 150, hot-dip galvanized** | C | 822,– | 143,– | 965,– |
| **SL 200, painted** | C | 766,– | 143,– | 909,– |
| **SL 200, hot-dip galvanized** | C | 902,– | 201,– | 1103,– |

| Fluorescent Tube Box Type SL-D | Category | Price | Freight charges | Price including freight charges |
|---|---|---|---|---|
| **SL-D 150, painted** | C | 757,– | 143,– | 900,– |
| Removable Tray, galvanized | C | 87,– | 10,– | 97,– |
| **SL-D 150, hot-dip galvanized** | C | 880,– | 143,– | 1023,– |
| Removable Tray, galvanized | C | 87,– | 10,– | 97,– |
| **SL-D 200, painted** | C | 837,– | 143,– | 980,– |
| Removable Tray, galvanized | C | 87,– | 10,– | 97,– |
| **SL-D 200, hot-dip galvanized** | C | 973,– | 143,– | 1116,– |
| Removable Tray, galvanized | C | 87,– | 10,– | 97,– |

| Fluorescent Tube Box Type SL-N | Category | Price | Freight charges | Price including freight charges |
|---|---|---|---|---|
| **SL-N 220, painted** | C | 861,– | 143,– | 1004,– |
| **SL-N 220, hot-dip galvanized** | C | 1003,– | 143,– | 1146,– |

| Special Waste Container Type SP | Category | Price | Freight charges | Price including freight charges |
|---|---|---|---|---|
| **SP 100, hot-dip galvanized** | C | on request | on request | on request |
| **SP 240, hot-dip galvanized** | C | on request | on request | on request |

| Transport Box for Aerosol Cans Type STB | Category | Price | Freight charges | Price including freight charges |
|---|---|---|---|---|
| **STB 1000, hot-dip galvanized** | C | 1158,– | on request | on request |
| Polyethylene sacks, 50 pieces on roll | C | 192,– | 62,– | 254,– |
| Absorbent felt, 100 pieces | C | 366,– | 32,– | 398,– |

Prices in EUR, valid EXW DE-46354 Südlohn, DE-38820 Halberstadt, unpacked
Freight charges valid CPT Denmark, islands and oversea territories excluded



BAUER GmbH
Eichendorffstr. 62
46354 Südlohn, Germany

Tel. +49 2862 70 90
info@bauer-suedlohn.com
www.bauer-suedlohn.com

Geschäftsführer
Patrick Bauer, Pascal Bauer
Amtsgericht Coesfeld HRB 5259

TÜVNORD
TÜV NORD CERT GmbH
DIN EN ISO 9001
tuev-nord.de