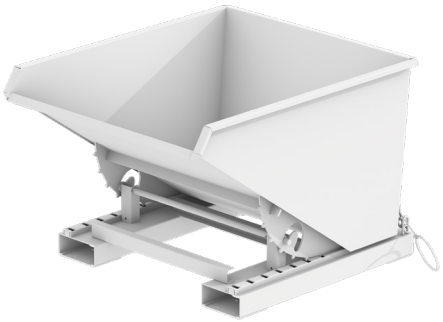

PRICE LIST 0726 EN-ES

FORKLIFT TRUCK ATTACHMENTS

WORKSPACE MATERIAL HANDLING

ENVIRONMENT / STORAGE

HAZARDOUS MATERIALS CONTAINERS

INNOVATION – CONSTRUCTION – PRODUCTION

. . . since 1966

Price List 0726 en-ES
Forklift Truck Attachments

Drum Gripper Type 3P	Category	Price	Freight charges	Price including freight charges
3P, painted	B	942,–	130,–	1072,–
3P, hot-dip galvanized	B	990,–	130,–	1120,–

Tilting Container Type 3S	Category	Price	Freight charges	Price including freight charges
3S 300, painted	A	1244,–	201,–	1445,–
Lid, galvanized	A	174,–	18,–	192,–
Castor Set, polyamide, Load capacity 1050 kg / castor set	A	136,–	15,–	151,–
3S 300, hot-dip galvanized	A	1342,–	291,–	1633,–
Lid, galvanized	A	174,–	18,–	192,–
Castor Set, polyamide, Load capacity 1050 kg / castor set	A	136,–	15,–	151,–
3S 600, painted	A	1300,–	291,–	1591,–
Lid, galvanized	A	196,–	22,–	218,–
Castor Set, polyamide, Load capacity 1050 kg / castor set	A	136,–	15,–	151,–
3S 600, hot-dip galvanized	A	1402,–	291,–	1693,–
Lid, galvanized	A	196,–	22,–	218,–
Castor Set, polyamide, Load capacity 1050 kg / castor set	A	136,–	15,–	151,–

Automatic Tilting Container Type 4A	Category	Price	Freight charges	Price including freight charges
4A 600, painted	A	1103,–	201,–	1304,–
Lid, galvanized	A	196,–	22,–	218,–
Skip Body Welded Oil and Watertight	A	78,–	0,–	78,–
4A 600, hot-dip galvanized	A	1250,–	201,–	1451,–
Lid, galvanized	A	196,–	22,–	218,–
Skip Body Welded Oil and Watertight	A	78,–	0,–	78,–
4A 900, painted	A	1239,–	291,–	1530,–
Lid, galvanized	A	223,–	27,–	250,–
Skip Body Welded Oil and Watertight	A	78,–	0,–	78,–
4A 900, hot-dip galvanized	A	1424,–	291,–	1715,–
Lid, galvanized	A	223,–	27,–	250,–
Skip Body Welded Oil and Watertight	A	78,–	0,–	78,–
4A 1200, painted	A	1327,–	291,–	1618,–
Lid, galvanized	A	223,–	26,–	249,–
Skip Body Welded Oil and Watertight	A	121,–	0,–	121,–
4A 1200, hot-dip galvanized	A	1558,–	291,–	1849,–
Lid, galvanized	A	223,–	26,–	249,–
Skip Body Welded Oil and Watertight	A	121,–	0,–	121,–

Drum Gripper Type 4P	Category	Price	Freight charges	Price including freight charges
4P, painted	B	578,–	60,–	638,–
4P, hot-dip galvanized	B	551,–	60,–	611,–

Prices in EUR, valid EXW DE-46354 Südlohn, DE-38820 Halberstadt, unpacked
Freight charges valid CPT Spain, islands and oversea territories excluded

BAUER GmbH
Eichendorffstr. 62
46354 Südlohn, Germany

Tel. +49 2862 70 90
info@bauer-suedlohn.com
www.bauer-suedlohn.com

Geschäftsführer
Patrick Bauer, Pascal Bauer
Amtsgericht Coesfeld HRB 5259

TÜVNORD
TÜV NORD CERT GmbH
DIN EN ISO 9001
tuev-nord.de

Price List 0726 en-ES
Forklift Truck Attachments

Drum Gripper Type 4P-D	Category	Price	Freight charges	Price including freight charges
4P-D120, painted	B	578,–	60,–	638,–
4P-D120, hot-dip galvanized	B	551,–	60,–	611,–
4P-D220, painted	B	578,–	60,–	638,–
4P-D220, hot-dip galvanized	B	551,–	60,–	611,–

Tilting Container Type AK	Category	Price	Freight charges	Price including freight charges
AK 50, painted	A	802,–	201,–	1003,–
Lid, galvanized	A	140,–	16,–	156,–
Castor Set, polyamide, Load capacity 1050 kg / castor set	A	136,–	15,–	151,–
Skip Body Welded Oil and Watertight	A	78,–	0,–	78,–
AK 50, hot-dip galvanized	A	956,–	201,–	1157,–
Lid, galvanized	A	140,–	16,–	156,–
Castor Set, polyamide, Load capacity 1050 kg / castor set	A	136,–	15,–	151,–
Skip Body Welded Oil and Watertight	A	78,–	0,–	78,–
AK 75, painted	A	897,–	201,–	1098,–
Lid, galvanized	A	192,–	21,–	213,–
Castor Set, polyamide, Load capacity 1050 kg / castor set	A	136,–	15,–	151,–
Skip Body Welded Oil and Watertight	A	78,–	0,–	78,–
AK 75, hot-dip galvanized	A	1048,–	291,–	1339,–
Lid, galvanized	A	192,–	21,–	213,–
Castor Set, polyamide, Load capacity 1050 kg / castor set	A	136,–	15,–	151,–
Skip Body Welded Oil and Watertight	A	78,–	0,–	78,–
AK 100, painted	A	970,–	291,–	1261,–
Lid, galvanized	A	218,–	26,–	244,–
Castor Set, polyamide, Load capacity 1050 kg / castor set	A	136,–	15,–	151,–
Skip Body Welded Oil and Watertight	A	121,–	0,–	121,–
AK 100, hot-dip galvanized	A	1133,–	291,–	1424,–
Lid, galvanized	A	218,–	26,–	244,–
Castor Set, polyamide, Load capacity 1050 kg / castor set	A	136,–	15,–	151,–
Skip Body Welded Oil and Watertight	A	121,–	0,–	121,–
AK 150, painted	A	1238,–	291,–	1529,–
Lid, galvanized	A	305,–	28,–	333,–
Castor Set, polyamide, Load capacity 1050 kg / castor set	A	136,–	15,–	151,–
Skip Body Welded Oil and Watertight	A	121,–	0,–	121,–
AK 150, hot-dip galvanized	A	1448,–	291,–	1739,–
Lid, galvanized	A	305,–	28,–	333,–
Castor Set, polyamide, Load capacity 1050 kg / castor set	A	136,–	15,–	151,–
Skip Body Welded Oil and Watertight	A	121,–	0,–	121,–

Container for Building Materials Type BBG	Category	Price	Freight charges	Price including freight charges
BBG 100, painted	A	405,–	201,–	606,–
Lid, galvanized	A	189,–	130,–	319,–
BBG 100, hot-dip galvanized	A	496,–	201,–	697,–
Lid, galvanized	A	189,–	130,–	319,–

Prices in EUR, valid EXW DE-46354 Südlohn, DE-38820 Halberstadt, unpacked
Freight charges valid CPT Spain, islands and oversea territories excluded

BAUER GmbH
Eichendorffstr. 62
46354 Südlohn, Germany

Tel. +49 2862 70 90
info@bauer-suedlohn.com
www.bauer-suedlohn.com

Geschäftsführer
Patrick Bauer, Pascal Bauer
Amtsgericht Coesfeld HRB 5259

TÜVNORD
TÜV NORD CERT GmbH
DIN EN ISO 9001
tuev-nord.de

Price List 0726 en-ES
Forklift Truck Attachments

Container for Building Materials Type BBK	Category	Price	Freight charges	Price including freight charges
BBK 100, painted	A	496,–	201,–	697,–
Lid, galvanized	A	189,–	130,–	319,–
BBK 100, hot-dip galvanized	A	571,–	201,–	772,–
Lid, galvanized	A	189,–	130,–	319,–

Material Container Type BBM	Category	Price	Freight charges	Price including freight charges
BBM 500, painted	A	325,–	130,–	455,–
BBM 500, hot-dip galvanized	A	359,–	130,–	489,–

Container for Building Materials Type BBP	Category	Price	Freight charges	Price including freight charges
BBP 100, painted	A	433,–	130,–	563,–
Lid, galvanized	A	189,–	130,–	319,–
Pick-up cones (pins) and angle iron traverse lock	A	51,–	10,–	61,–
BBP 100, hot-dip galvanized	A	511,–	130,–	641,–
Lid, galvanized	A	189,–	130,–	319,–
Pick-up cones (pins) and angle iron traverse lock	A	51,–	10,–	61,–

Tilting Traverse for Containers for Building Material Containers Type BBT	Category	Price	Freight charges	Price including freight charges
BBT, painted	A	571,–	201,–	772,–
BBT, hot-dip galvanized	A	649,–	201,–	850,–

Building Materials Container Type BC	Category	Price	Freight charges	Price including freight charges
BC 500, painted	B	957,–	201,–	1158,–
Lid, galvanized	B	143,–	16,–	159,–
Castor Set, polyamide, Load capacity 1350 kg / castor set	A	192,–	15,–	207,–
BC 500, hot-dip galvanized	B	1179,–	291,–	1470,–
Lid, galvanized	B	143,–	16,–	159,–
Castor Set, polyamide, Load capacity 1350 kg / castor set	A	192,–	15,–	207,–
BC 500 (brick clamp operated), painted	B	1026,–	201,–	1227,–
Lid, galvanized	B	143,–	16,–	159,–
Castor Set, polyamide, Load capacity 1350 kg / castor set	A	192,–	15,–	207,–
BC 500 (brick clamp operated), hot-dip galvanized	B	1250,–	291,–	1541,–
Lid, galvanized	B	143,–	16,–	159,–
Castor Set, polyamide, Load capacity 1350 kg / castor set	A	192,–	15,–	207,–
BC 1000, painted	B	1043,–	291,–	1334,–
Lid, galvanized	B	143,–	16,–	159,–
Castor Set, polyamide, Load capacity 1350 kg / castor set	A	192,–	15,–	207,–
BC 1000, hot-dip galvanized	B	1316,–	291,–	1607,–
Lid, galvanized	B	143,–	16,–	159,–
Castor Set, polyamide, Load capacity 1350 kg / castor set	A	192,–	15,–	207,–
BC 1000 (brick clamp operated), painted	B	1111,–	291,–	1402,–
Lid, galvanized	B	143,–	16,–	159,–
Castor Set, polyamide, Load capacity 1350 kg / castor set	A	192,–	15,–	207,–
BC 1000 (brick clamp operated), hot-dip galvanized	B	1386,–	291,–	1677,–
Lid, galvanized	B	143,–	16,–	159,–

Prices in EUR, valid EXW DE-46354 Südlohn, DE-38820 Halberstadt, unpacked
Freight charges valid CPT Spain, islands and oversea territories excluded

BAUER GmbH
Eichendorffstr. 62
46354 Südlohn, Germany

Tel. +49 2862 70 90
info@bauer-suedlohn.com
www.bauer-suedlohn.com

Geschäftsführer
Patrick Bauer, Pascal Bauer
Amtsgericht Coesfeld HRB 5259

TÜVNORD
TÜV NORD CERT GmbH
DIN EN ISO 9001
tuev-nord.de

Price List 0726 en-ES
Forklift Truck Attachments

Building Materials Container Type BC	Category	Price	Freight charges	Price including freight charges
Castor Set, polyamide, Load capacity 1350 kg / castor set	A	192,–	15,–	207,–

Tilting Container Type BK	Category	Price	Freight charges	Price including freight charges
BK 30, painted	A	700,–	201,–	901,–
Lid, galvanized	A	98,–	18,–	116,–
Castor Set, polyamide, Load capacity 1350 kg / castor set	A	192,–	15,–	207,–
Heavy-duty Castor Set, polyamide, Load capacity 2550 kg / castor set	A	379,–	15,–	394,–
Skip Body Welded Oil and Watertight	A	78,–	0,–	78,–
BK 30, hot-dip galvanized	A	984,–	201,–	1185,–
Lid, galvanized	A	98,–	18,–	116,–
Castor Set, polyamide, Load capacity 1350 kg / castor set	A	192,–	15,–	207,–
Heavy-duty Castor Set, polyamide, Load capacity 2550 kg / castor set	A	379,–	15,–	394,–
Skip Body Welded Oil and Watertight	A	78,–	0,–	78,–
BK 50, painted	A	984,–	201,–	1185,–
Lid, galvanized	A	98,–	20,–	118,–
Castor Set, polyamide, Load capacity 1350 kg / castor set	A	192,–	15,–	207,–
Heavy-duty Castor Set, polyamide, Load capacity 2550 kg / castor set	A	379,–	15,–	394,–
Skip Body Welded Oil and Watertight	A	78,–	0,–	78,–
BK 50, hot-dip galvanized	A	1327,–	291,–	1618,–
Lid, galvanized	A	98,–	20,–	118,–
Castor Set, polyamide, Load capacity 1350 kg / castor set	A	192,–	15,–	207,–
Heavy-duty Castor Set, polyamide, Load capacity 2550 kg / castor set	A	379,–	15,–	394,–
Skip Body Welded Oil and Watertight	A	78,–	0,–	78,–
BK 80, painted	A	1297,–	291,–	1588,–
Lid, galvanized	A	144,–	22,–	166,–
Castor Set, polyamide, Load capacity 1350 kg / castor set	A	192,–	15,–	207,–
Heavy-duty Castor Set, polyamide, Load capacity 2550 kg / castor set	A	379,–	15,–	394,–
Skip Body Welded Oil and Watertight	A	78,–	0,–	78,–
BK 80, hot-dip galvanized	A	1814,–	291,–	2105,–
Lid, galvanized	A	144,–	22,–	166,–
Castor Set, polyamide, Load capacity 1350 kg / castor set	A	192,–	15,–	207,–
Heavy-duty Castor Set, polyamide, Load capacity 2550 kg / castor set	A	379,–	15,–	394,–
Skip Body Welded Oil and Watertight	A	78,–	0,–	78,–
BK 100, painted	A	1508,–	291,–	1799,–
Lid, galvanized	A	173,–	27,–	200,–
Castor Set, polyamide, Load capacity 1350 kg / castor set	A	192,–	15,–	207,–
Heavy-duty Castor Set, polyamide, Load capacity 2550 kg / castor set	A	379,–	15,–	394,–
Skip Body Welded Oil and Watertight	A	121,–	0,–	121,–
BK 100, hot-dip galvanized	A	2070,–	291,–	2361,–
Lid, galvanized	A	173,–	27,–	200,–
Castor Set, polyamide, Load capacity 1350 kg / castor set	A	192,–	15,–	207,–
Heavy-duty Castor Set, polyamide, Load capacity 2550 kg / castor set	A	379,–	15,–	394,–
Skip Body Welded Oil and Watertight	A	121,–	0,–	121,–
BK 120, painted	A	1640,–	291,–	1931,–
Lid, galvanized	A	184,–	32,–	216,–
Castor Set, polyamide, Load capacity 1350 kg / castor set	A	192,–	15,–	207,–

Prices in EUR, valid EXW DE-46354 Südlohn, DE-38820 Halberstadt, unpacked
Freight charges valid CPT Spain, islands and oversea territories excluded

BAUER GmbH
Eichendorffstr. 62
46354 Südlohn, Germany

Tel. +49 2862 70 90
info@bauer-suedlohn.com
www.bauer-suedlohn.com

Geschäftsführer
Patrick Bauer, Pascal Bauer
Amtsgericht Coesfeld HRB 5259

TÜVNORD
TÜV NORD CERT GmbH
DIN EN ISO 9001
tuev-nord.de

Price List 0726 en-ES
Forklift Truck Attachments

Tilting Container Type BK	Category	Price	Freight charges	Price including freight charges
Heavy-duty Castor Set, polyamide, Load capacity 2550 kg / castor set	A	379,–	15,–	394,–
Skip Body Welded Oil and Watertight	A	121,–	0,–	121,–
BK 120, hot-dip galvanized	A	2235,–	291,–	2526,–
Lid, galvanized	A	184,–	32,–	216,–
Castor Set, polyamide, Load capacity 1350 kg / castor set	A	192,–	15,–	207,–
Heavy-duty Castor Set, polyamide, Load capacity 2550 kg / castor set	A	379,–	15,–	394,–
Skip Body Welded Oil and Watertight	A	121,–	0,–	121,–
BK 150, painted	A	1801,–	357,–	2158,–
Lid, galvanized	A	211,–	39,–	250,–
Castor Set, polyamide, Load capacity 1350 kg / castor set	A	192,–	15,–	207,–
Heavy-duty Castor Set, polyamide, Load capacity 2550 kg / castor set	A	379,–	15,–	394,–
Skip Body Welded Oil and Watertight	A	121,–	0,–	121,–
BK 150, hot-dip galvanized	A	2444,–	357,–	2801,–
Lid, galvanized	A	211,–	39,–	250,–
Castor Set, polyamide, Load capacity 1350 kg / castor set	A	192,–	15,–	207,–
Heavy-duty Castor Set, polyamide, Load capacity 2550 kg / castor set	A	379,–	15,–	394,–
Skip Body Welded Oil and Watertight	A	121,–	0,–	121,–
BK 200, painted	A	2240,–	357,–	2597,–
Lid, galvanized	A	223,–	130,–	353,–
Castor Set, polyamide, Load capacity 1350 kg / castor set	A	192,–	15,–	207,–
Heavy-duty Castor Set, polyamide, Load capacity 2550 kg / castor set	A	379,–	15,–	394,–
Skip Body Welded Oil and Watertight	A	121,–	0,–	121,–
BK 200, hot-dip galvanized	A	3052,–	500,–	3552,–
Lid, galvanized	A	223,–	130,–	353,–
Castor Set, polyamide, Load capacity 1350 kg / castor set	A	192,–	15,–	207,–
Heavy-duty Castor Set, polyamide, Load capacity 2550 kg / castor set	A	379,–	15,–	394,–
Skip Body Welded Oil and Watertight	A	121,–	0,–	121,–

Container With Drop Away Base Type BKB	Category	Price	Freight charges	Price including freight charges
BKB 500, painted	A	763,–	201,–	964,–
Lid, galvanized	A	196,–	18,–	214,–
Castor Set, polyamide, Load capacity 1350 kg / castor set	A	192,–	15,–	207,–
BKB 500, hot-dip galvanized	A	907,–	201,–	1108,–
Lid, galvanized	A	196,–	18,–	214,–
Castor Set, polyamide, Load capacity 1350 kg / castor set	A	192,–	15,–	207,–
BKB 700, painted	A	816,–	201,–	1017,–
Lid, galvanized	A	196,–	18,–	214,–
Castor Set, polyamide, Load capacity 1350 kg / castor set	A	192,–	15,–	207,–
BKB 700, hot-dip galvanized	A	960,–	201,–	1161,–
Lid, galvanized	A	196,–	18,–	214,–
Castor Set, polyamide, Load capacity 1350 kg / castor set	A	192,–	15,–	207,–
BKB 1000, painted	A	865,–	201,–	1066,–
Lid, galvanized	A	196,–	18,–	214,–
Castor Set, polyamide, Load capacity 1350 kg / castor set	A	192,–	15,–	207,–
BKB 1000, hot-dip galvanized	A	1029,–	201,–	1230,–
Lid, galvanized	A	196,–	18,–	214,–

Prices in EUR, valid EXW DE-46354 Südlohn, DE-38820 Halberstadt, unpacked
Freight charges valid CPT Spain, islands and oversea territories excluded

BAUER GmbH
Eichendorffstr. 62
46354 Südlohn, Germany

Tel. +49 2862 70 90
info@bauer-suedlohn.com
www.bauer-suedlohn.com

Geschäftsführer
Patrick Bauer, Pascal Bauer
Amtsgericht Coesfeld HRB 5259

TÜVNORD
TÜV NORD CERT GmbH
DIN EN ISO 9001
tuev-nord.de

Price List 0726 en-ES
Forklift Truck Attachments

Container With Drop Away Base Type BKB	Category	Price	Freight charges	Price including freight charges
Castor Set, polyamide, Load capacity 1350 kg / castor set	A	192,–	15,–	207,–

Tilting Container Type BKC	Category	Price	Freight charges	Price including freight charges
BKC 200, painted	A	2308,–	500,–	2808,–
Lid, galvanized	A	450,–	130,–	580,–
Skip Body Welded Oil and Watertight	A	121,–	0,–	121,–
BKC 200, hot-dip galvanized	A	3089,–	500,–	3589,–
Lid, galvanized	A	450,–	130,–	580,–
Skip Body Welded Oil and Watertight	A	121,–	0,–	121,–
BKC 300, painted	A	2558,–	500,–	3058,–
Lid, galvanized	A	450,–	130,–	580,–
Skip Body Welded Oil and Watertight	A	121,–	0,–	121,–
BKC 300, hot-dip galvanized	A	3367,–	500,–	3867,–
Lid, galvanized	A	450,–	130,–	580,–
Skip Body Welded Oil and Watertight	A	121,–	0,–	121,–
BKC 400, painted	A	3150,–	500,–	3650,–
Lid, galvanized	A	450,–	201,–	651,–
Skip Body Welded Oil and Watertight	A	121,–	0,–	121,–
BKC 400, hot-dip galvanized	A	4067,–	645,–	4712,–
Lid, galvanized	A	450,–	201,–	651,–
Skip Body Welded Oil and Watertight	A	121,–	0,–	121,–
BKC 500, painted	A	3659,–	645,–	4304,–
Lid, galvanized	A	450,–	201,–	651,–
Skip Body Welded Oil and Watertight	A	121,–	0,–	121,–
BKC 500, hot-dip galvanized	A	4641,–	645,–	5286,–
Lid, galvanized	A	450,–	201,–	651,–
Skip Body Welded Oil and Watertight	A	121,–	0,–	121,–

Tilting Container Type BKC-H	Category	Price	Freight charges	Price including freight charges
BKC-H 200, painted	A	3422,–	500,–	3922,–
Lid, galvanized	A	450,–	130,–	580,–
Skip Body Welded Oil and Watertight	A	121,–	0,–	121,–
BKC-H 200, hot-dip galvanized	A	4204,–	500,–	4704,–
Lid, galvanized	A	450,–	130,–	580,–
Skip Body Welded Oil and Watertight	A	121,–	0,–	121,–
BKC-H 300, painted	A	3673,–	500,–	4173,–
Lid, galvanized	A	450,–	130,–	580,–
Skip Body Welded Oil and Watertight	A	121,–	0,–	121,–
BKC-H 300, hot-dip galvanized	A	4483,–	500,–	4983,–
Lid, galvanized	A	450,–	130,–	580,–
Skip Body Welded Oil and Watertight	A	121,–	0,–	121,–
BKC-H 400, painted	A	4265,–	500,–	4765,–
Lid, galvanized	A	450,–	201,–	651,–
Skip Body Welded Oil and Watertight	A	121,–	0,–	121,–
BKC-H 400, hot-dip galvanized	A	5182,–	645,–	5827,–

Prices in EUR, valid EXW DE-46354 Südlohn, DE-38820 Halberstadt, unpacked
Freight charges valid CPT Spain, islands and oversea territories excluded

BAUER GmbH
Eichendorffstr. 62
46354 Südlohn, Germany

Tel. +49 2862 70 90
info@bauer-suedlohn.com
www.bauer-suedlohn.com

Geschäftsführer
Patrick Bauer, Pascal Bauer
Amtsgericht Coesfeld HRB 5259

TÜVNORD
TÜV NORD CERT GmbH
DIN EN ISO 9001
tuev-nord.de

Price List 0726 en-ES
Forklift Truck Attachments

Tilting Container Type BKC-H	Category	Price	Freight charges	Price including freight charges
Lid, galvanized	A	450,–	201,–	651,–
Skip Body Welded Oil and Watertight	A	121,–	0,–	121,–
BKC-H 500, painted	A	4774,–	645,–	5419,–
Lid, galvanized	A	450,–	201,–	651,–
Skip Body Welded Oil and Watertight	A	121,–	0,–	121,–
BKC-H 500, hot-dip galvanized	A	5756,–	645,–	6401,–
Lid, galvanized	A	450,–	201,–	651,–
Skip Body Welded Oil and Watertight	A	121,–	0,–	121,–

Tilting Container Type BKM	Category	Price	Freight charges	Price including freight charges
BKM 30, painted	A	700,–	201,–	901,–
Lid, galvanized	A	104,–	18,–	122,–
Castor Set, polyamide, Load capacity 1350 kg / castor set	A	192,–	15,–	207,–
Heavy-duty Castor Set, polyamide, Load capacity 2550 kg / castor set	A	379,–	15,–	394,–
Skip Body Welded Oil and Watertight	A	78,–	0,–	78,–
BKM 30, hot-dip galvanized	A	984,–	201,–	1185,–
Lid, galvanized	A	104,–	18,–	122,–
Castor Set, polyamide, Load capacity 1350 kg / castor set	A	192,–	15,–	207,–
Heavy-duty Castor Set, polyamide, Load capacity 2550 kg / castor set	A	379,–	15,–	394,–
Skip Body Welded Oil and Watertight	A	78,–	0,–	78,–
BKM 50, painted	A	984,–	201,–	1185,–
Lid, galvanized	A	130,–	21,–	151,–
Castor Set, polyamide, Load capacity 1350 kg / castor set	A	192,–	15,–	207,–
Heavy-duty Castor Set, polyamide, Load capacity 2550 kg / castor set	A	379,–	15,–	394,–
Skip Body Welded Oil and Watertight	A	78,–	0,–	78,–
BKM 50, hot-dip galvanized	A	1327,–	201,–	1528,–
Lid, galvanized	A	130,–	21,–	151,–
Castor Set, polyamide, Load capacity 1350 kg / castor set	A	192,–	15,–	207,–
Heavy-duty Castor Set, polyamide, Load capacity 2550 kg / castor set	A	379,–	15,–	394,–
Skip Body Welded Oil and Watertight	A	78,–	0,–	78,–
BKM 75, painted	A	1246,–	291,–	1537,–
Lid, galvanized	A	142,–	22,–	164,–
Castor Set, polyamide, Load capacity 1350 kg / castor set	A	192,–	15,–	207,–
Heavy-duty Castor Set, polyamide, Load capacity 2550 kg / castor set	A	379,–	15,–	394,–
Skip Body Welded Oil and Watertight	A	78,–	0,–	78,–
BKM 75, hot-dip galvanized	A	1672,–	291,–	1963,–
Lid, galvanized	A	142,–	22,–	164,–
Castor Set, polyamide, Load capacity 1350 kg / castor set	A	192,–	15,–	207,–
Heavy-duty Castor Set, polyamide, Load capacity 2550 kg / castor set	A	379,–	15,–	394,–
Skip Body Welded Oil and Watertight	A	78,–	0,–	78,–
BKM 100, painted	A	1508,–	291,–	1799,–
Lid, galvanized	A	185,–	27,–	212,–
Castor Set, polyamide, Load capacity 1350 kg / castor set	A	192,–	15,–	207,–
Heavy-duty Castor Set, polyamide, Load capacity 2550 kg / castor set	A	379,–	15,–	394,–
Skip Body Welded Oil and Watertight	A	121,–	0,–	121,–
BKM 100, hot-dip galvanized	A	2070,–	291,–	2361,–

Prices in EUR, valid EXW DE-46354 Südlohn, DE-38820 Halberstadt, unpacked
Freight charges valid CPT Spain, islands and oversea territories excluded

BAUER GmbH
Eichendorffstr. 62
46354 Südlohn, Germany

Tel. +49 2862 70 90
info@bauer-suedlohn.com
www.bauer-suedlohn.com

Geschäftsführer
Patrick Bauer, Pascal Bauer
Amtsgericht Coesfeld HRB 5259

TÜVNORD
TÜV NORD CERT GmbH
DIN EN ISO 9001
tuev-nord.de

Price List 0726 en-ES
Forklift Truck Attachments

Tilting Container Type BKM	Category	Price	Freight charges	Price including freight charges
Lid, galvanized	A	185,–	27,–	212,–
Castor Set, polyamide, Load capacity 1350 kg / castor set	A	192,–	15,–	207,–
Heavy-duty Castor Set, polyamide, Load capacity 2550 kg / castor set	A	379,–	15,–	394,–
Skip Body Welded Oil and Watertight	A	121,–	0,–	121,–
BKM 150, painted	A	1801,–	357,–	2158,–
Lid, galvanized	A	271,–	36,–	307,–
Castor Set, polyamide, Load capacity 1350 kg / castor set	A	192,–	15,–	207,–
Heavy-duty Castor Set, polyamide, Load capacity 2550 kg / castor set	A	379,–	15,–	394,–
Skip Body Welded Oil and Watertight	A	121,–	0,–	121,–
BKM 150, hot-dip galvanized	A	2444,–	357,–	2801,–
Lid, galvanized	A	271,–	36,–	307,–
Castor Set, polyamide, Load capacity 1350 kg / castor set	A	192,–	15,–	207,–
Heavy-duty Castor Set, polyamide, Load capacity 2550 kg / castor set	A	379,–	15,–	394,–
Skip Body Welded Oil and Watertight	A	121,–	0,–	121,–
BKM 200, painted	A	2240,–	357,–	2597,–
Lid, galvanized	A	302,–	130,–	432,–
Castor Set, polyamide, Load capacity 1350 kg / castor set	A	192,–	15,–	207,–
Heavy-duty Castor Set, polyamide, Load capacity 2550 kg / castor set	A	379,–	15,–	394,–
Skip Body Welded Oil and Watertight	A	121,–	0,–	121,–
Lid, galvanized	A	302,–	130,–	432,–
Castor Set, polyamide, Load capacity 1350 kg / castor set	A	192,–	15,–	207,–
Heavy-duty Castor Set, polyamide, Load capacity 2550 kg / castor set	A	379,–	15,–	394,–
Skip Body Welded Oil and Watertight	A	121,–	0,–	121,–

Traverse For Stacking Tippers Type BKT	Category	Price	Freight charges	Price including freight charges
BKT 30, painted	A	368,–	201,–	569,–
Traverse Stand Type TS, hot-dip galvanized	A	78,–	8,–	86,–
BKT 55, painted	A	390,–	201,–	591,–
Traverse Stand Type TS, hot-dip galvanized	A	78,–	9,–	87,–
BKT 70, painted	A	390,–	201,–	591,–
Traverse Stand Type TS, hot-dip galvanized	A	78,–	9,–	87,–
BKT 90, painted	A	392,–	201,–	593,–
Traverse Stand Type TS, hot-dip galvanized	A	78,–	9,–	87,–
BKT 150, painted	A	631,–	201,–	832,–
Traverse Stand Type TS, hot-dip galvanized	A	78,–	9,–	87,–
BKT 200, painted	A	696,–	201,–	897,–
Traverse Stand Type TS, hot-dip galvanized	A	78,–	9,–	87,–

Shovel Type BSE	Category	Price	Freight charges	Price including freight charges
BSE 50, painted	A	1486,–	291,–	1777,–
BSE 75, painted	A	1769,–	291,–	2060,–
BSE 100, painted	A	2219,–	357,–	2576,–
BSE 150, painted	A	2507,–	357,–	2864,–
BSE 200, painted	A	2786,–	500,–	3286,–
BSE 250, painted	A	3433,–	553,–	3986,–

Prices in EUR, valid EXW DE-46354 Südlohn, DE-38820 Halberstadt, unpacked
Freight charges valid CPT Spain, islands and oversea territories excluded

BAUER GmbH
Eichendorffstr. 62
46354 Südlohn, Germany

Tel. +49 2862 70 90
info@bauer-suedlohn.com
www.bauer-suedlohn.com

Geschäftsführer
Patrick Bauer, Pascal Bauer
Amtsgericht Coesfeld HRB 5259

TÜVNORD
TÜV NORD CERT GmbH
DIN EN ISO 9001
tuev-nord.de

Price List 0726 en-ES
Forklift Truck Attachments

Shovel Type BSI	Category	Price	Freight charges	Price including freight charges
BSI 50, painted	A	1257,–	201,–	1458,–
BSI 75, painted	A	1424,–	291,–	1715,–
BSI 100, painted	A	1786,–	291,–	2077,–

Stacking Tipper Type BSK	Category	Price	Freight charges	Price including freight charges
BSK 30, painted	A	265,–	130,–	395,–
Lid, galvanized	A	69,–	12,–	81,–
Castor Set, polyamide, Load capacity 1350 kg / castor set	A	192,–	15,–	207,–
Skip Body Welded Oil and Watertight	A	78,–	0,–	78,–
Set of 5 self-adhesive stickers with symbols for: glass, paper, plastic, metal, residual waste	A	29,–	on request	on request
BSK 30, hot-dip galvanized	A	320,–	130,–	450,–
Lid, galvanized	A	69,–	12,–	81,–
Castor Set, polyamide, Load capacity 1350 kg / castor set	A	192,–	15,–	207,–
Skip Body Welded Oil and Watertight	A	78,–	0,–	78,–
Set of 5 self-adhesive stickers with symbols for: glass, paper, plastic, metal, residual waste	A	29,–	on request	on request
BSK 55, painted	A	332,–	130,–	462,–
Lid, galvanized	A	98,–	15,–	113,–
Castor Set, polyamide, Load capacity 1350 kg / castor set	A	192,–	15,–	207,–
Skip Body Welded Oil and Watertight	A	78,–	0,–	78,–
Set of 5 self-adhesive stickers with symbols for: glass, paper, plastic, metal, residual waste	A	29,–	on request	on request
BSK 55, hot-dip galvanized	A	405,–	130,–	535,–
Lid, galvanized	A	98,–	15,–	113,–
Castor Set, polyamide, Load capacity 1350 kg / castor set	A	192,–	15,–	207,–
Skip Body Welded Oil and Watertight	A	78,–	0,–	78,–
Set of 5 self-adhesive stickers with symbols for: glass, paper, plastic, metal, residual waste	A	29,–	on request	on request
BSK 70, painted	A	352,–	130,–	482,–
Lid, galvanized	A	122,–	15,–	137,–
Castor Set, polyamide, Load capacity 1350 kg / castor set	A	192,–	15,–	207,–
Skip Body Welded Oil and Watertight	A	78,–	0,–	78,–
Set of 5 self-adhesive stickers with symbols for: glass, paper, plastic, metal, residual waste	A	29,–	on request	on request
BSK 70, hot-dip galvanized	A	457,–	130,–	587,–
Lid, galvanized	A	122,–	15,–	137,–
Castor Set, polyamide, Load capacity 1350 kg / castor set	A	192,–	15,–	207,–
Skip Body Welded Oil and Watertight	A	78,–	0,–	78,–
Set of 5 self-adhesive stickers with symbols for: glass, paper, plastic, metal, residual waste	A	29,–	on request	on request
BSK 90, painted	A	379,–	130,–	509,–
Lid, galvanized	A	166,–	18,–	184,–
Castor Set, polyamide, Load capacity 1350 kg / castor set	A	192,–	15,–	207,–
Skip Body Welded Oil and Watertight	A	78,–	0,–	78,–
Set of 5 self-adhesive stickers with symbols for: glass, paper, plastic, metal, residual waste	A	29,–	on request	on request
BSK 90, hot-dip galvanized	A	487,–	201,–	688,–
Lid, galvanized	A	166,–	18,–	184,–
Castor Set, polyamide, Load capacity 1350 kg / castor set	A	192,–	15,–	207,–
Skip Body Welded Oil and Watertight	A	78,–	0,–	78,–
Set of 5 self-adhesive stickers with symbols for: glass, paper, plastic, metal, residual waste	A	29,–	on request	on request
BSK 150, painted	A	871,–	201,–	1072,–

Prices in EUR, valid EXW DE-46354 Südlohn, DE-38820 Halberstadt, unpacked
Freight charges valid CPT Spain, islands and oversea territories excluded

BAUER GmbH
Eichendorffstr. 62
46354 Südlohn, Germany

Tel. +49 2862 70 90
info@bauer-suedlohn.com
www.bauer-suedlohn.com

Geschäftsführer
Patrick Bauer, Pascal Bauer
Amtsgericht Coesfeld HRB 5259

TÜVNORD
TÜV NORD CERT GmbH
DIN EN ISO 9001
tuev-nord.de

Price List 0726 en-ES
Forklift Truck Attachments

Stacking Tipper Type BSK	Category	Price	Freight charges	Price including freight charges
Lid, galvanized	A	223,–	21,–	244,–
Castor Set, polyamide, Load capacity 1350 kg / castor set	A	192,–	15,–	207,–
Skip Body Welded Oil and Watertight	A	121,–	0,–	121,–
Set of 5 self-adhesive stickers with symbols for: glass, paper, plastic, metal, residual waste	A	29,–	on request	on request
BSK 150, hot-dip galvanized	A	1019,–	201,–	1220,–
Lid, galvanized	A	223,–	21,–	244,–
Castor Set, polyamide, Load capacity 1350 kg / castor set	A	192,–	15,–	207,–
Skip Body Welded Oil and Watertight	A	121,–	0,–	121,–
Set of 5 self-adhesive stickers with symbols for: glass, paper, plastic, metal, residual waste	A	29,–	on request	on request
BSK 200, painted	A	934,–	201,–	1135,–
Lid, galvanized	A	284,–	26,–	310,–
Castor Set, polyamide, Load capacity 1350 kg / castor set	A	192,–	15,–	207,–
Skip Body Welded Oil and Watertight	A	121,–	0,–	121,–
Set of 5 self-adhesive stickers with symbols for: glass, paper, plastic, metal, residual waste	A	29,–	on request	on request
BSK 200, hot-dip galvanized	A	1169,–	201,–	1370,–
Lid, galvanized	A	284,–	26,–	310,–
Castor Set, polyamide, Load capacity 1350 kg / castor set	A	192,–	15,–	207,–
Skip Body Welded Oil and Watertight	A	121,–	0,–	121,–
Set of 5 self-adhesive stickers with symbols for: glass, paper, plastic, metal, residual waste	A	29,–	on request	on request

Lattice Tilting Container Type BSK-G	Category	Price	Freight charges	Price including freight charges
BSK-G 90, painted	A	344,–	130,–	474,–
Lid, galvanized	A	166,–	18,–	184,–
Castor Set, polyamide, Load capacity 1350 kg / castor set	A	192,–	15,–	207,–
BSK-G 90, hot-dip galvanized	A	419,–	130,–	549,–
Lid, galvanized	A	166,–	18,–	184,–
Castor Set, polyamide, Load capacity 1350 kg / castor set	A	192,–	15,–	207,–

Swarf Stacking Tipper Type BSL	Category	Price	Freight charges	Price including freight charges
BSL 30, painted	A	590,–	130,–	720,–
Lid, galvanized	A	69,–	12,–	81,–
Castor Set, polyamide, Load capacity 1350 kg / castor set	A	192,–	15,–	207,–
BSL 30, hot-dip galvanized	A	679,–	130,–	809,–
Lid, galvanized	A	69,–	12,–	81,–
Castor Set, polyamide, Load capacity 1350 kg / castor set	A	192,–	15,–	207,–
BSL 55, painted	A	726,–	201,–	927,–
Lid, galvanized	A	98,–	15,–	113,–
Castor Set, polyamide, Load capacity 1350 kg / castor set	A	192,–	15,–	207,–
BSL 55, hot-dip galvanized	A	852,–	201,–	1053,–
Lid, galvanized	A	98,–	15,–	113,–
Castor Set, polyamide, Load capacity 1350 kg / castor set	A	192,–	15,–	207,–
BSL 70, painted	A	763,–	201,–	964,–
Lid, galvanized	A	122,–	15,–	137,–
Castor Set, polyamide, Load capacity 1350 kg / castor set	A	192,–	15,–	207,–
BSL 70, hot-dip galvanized	A	912,–	201,–	1113,–

Prices in EUR, valid EXW DE-46354 Südlohn, DE-38820 Halberstadt, unpacked
Freight charges valid CPT Spain, islands and oversea territories excluded

BAUER GmbH
Eichendorffstr. 62
46354 Südlohn, Germany

Tel. +49 2862 70 90
info@bauer-suedlohn.com
www.bauer-suedlohn.com

Geschäftsführer
Patrick Bauer, Pascal Bauer
Amtsgericht Coesfeld HRB 5259

TÜVNORD
TÜV NORD CERT GmbH
DIN EN ISO 9001
tuev-nord.de

Price List 0726 en-ES
Forklift Truck Attachments

Swarf Stacking Tipper Type BSL	Category	Price	Freight charges	Price including freight charges
Lid, galvanized	A	122,–	15,–	137,–
Castor Set, polyamide, Load capacity 1350 kg / castor set	A	192,–	15,–	207,–
BSL 90, painted	A	830,–	201,–	1031,–
Lid, galvanized	A	166,–	18,–	184,–
Castor Set, polyamide, Load capacity 1350 kg / castor set	A	192,–	15,–	207,–
BSL 90, hot-dip galvanized	A	1004,–	201,–	1205,–
Lid, galvanized	A	166,–	18,–	184,–
Castor Set, polyamide, Load capacity 1350 kg / castor set	A	192,–	15,–	207,–
BSL 150, painted	A	1227,–	201,–	1428,–
Lid, galvanized	A	223,–	21,–	244,–
Castor Set, polyamide, Load capacity 1350 kg / castor set	A	192,–	15,–	207,–
BSL 150, hot-dip galvanized	A	1490,–	291,–	1781,–
Lid, galvanized	A	223,–	21,–	244,–
Castor Set, polyamide, Load capacity 1350 kg / castor set	A	192,–	15,–	207,–
BSL 200, painted	A	1327,–	291,–	1618,–
Lid, galvanized	A	284,–	26,–	310,–
Castor Set, polyamide, Load capacity 1350 kg / castor set	A	192,–	15,–	207,–
BSL 200, hot-dip galvanized	A	1792,–	291,–	2083,–
Lid, galvanized	A	284,–	26,–	310,–
Castor Set, polyamide, Load capacity 1350 kg / castor set	A	192,–	15,–	207,–

Shovel Type BSM	Category	Price	Freight charges	Price including freight charges
BSM 50, painted	A	1486,–	201,–	1687,–
BSM 75, painted	A	1769,–	291,–	2060,–
BSM 100, painted	A	2219,–	357,–	2576,–
BSM 150, painted	A	2507,–	357,–	2864,–
BSM 200, painted	A	2786,–	500,–	3286,–
BSM 250, painted	A	3433,–	553,–	3986,–

Swarf Stacking Tipper Type BSS	Category	Price	Freight charges	Price including freight charges
BSS 30, painted	A	422,–	130,–	552,–
Lid, galvanized	A	69,–	12,–	81,–
Castor Set, polyamide, Load capacity 1350 kg / castor set	A	192,–	15,–	207,–
BSS 30, hot-dip galvanized	A	490,–	130,–	620,–
Lid, galvanized	A	69,–	12,–	81,–
Castor Set, polyamide, Load capacity 1350 kg / castor set	A	192,–	15,–	207,–
BSS 55, painted	A	523,–	130,–	653,–
Lid, galvanized	A	98,–	15,–	113,–
Castor Set, polyamide, Load capacity 1350 kg / castor set	A	192,–	15,–	207,–
BSS 55, hot-dip galvanized	A	648,–	130,–	778,–
Lid, galvanized	A	98,–	15,–	113,–
Castor Set, polyamide, Load capacity 1350 kg / castor set	A	192,–	15,–	207,–
BSS 70, painted	A	561,–	130,–	691,–
Lid, galvanized	A	122,–	15,–	137,–
Castor Set, polyamide, Load capacity 1350 kg / castor set	A	192,–	15,–	207,–

Prices in EUR, valid EXW DE-46354 Südlohn, DE-38820 Halberstadt, unpacked
Freight charges valid CPT Spain, islands and oversea territories excluded

BAUER GmbH
Eichendorffstr. 62
46354 Südlohn, Germany

Tel. +49 2862 70 90
info@bauer-suedlohn.com
www.bauer-suedlohn.com

Geschäftsführer
Patrick Bauer, Pascal Bauer
Amtsgericht Coesfeld HRB 5259

TÜVNORD
TÜV NORD CERT GmbH
DIN EN ISO 9001
tuev-nord.de

Price List 0726 en-ES
Forklift Truck Attachments

Swarf Stacking Tipper Type BSS	Category	Price	Freight charges	Price including freight charges
BSS 70, hot-dip galvanized	A	708,–	201,–	909,–
Lid, galvanized	A	122,–	15,–	137,–
Castor Set, polyamide, Load capacity 1350 kg / castor set	A	192,–	15,–	207,–
BSS 90, painted	A	597,–	201,–	798,–
Lid, galvanized	A	166,–	18,–	184,–
Castor Set, polyamide, Load capacity 1350 kg / castor set	A	192,–	15,–	207,–
BSS 90, hot-dip galvanized	A	765,–	201,–	966,–
Lid, galvanized	A	166,–	18,–	184,–
Castor Set, polyamide, Load capacity 1350 kg / castor set	A	192,–	15,–	207,–
BSS 150, painted	A	907,–	201,–	1108,–
Lid, galvanized	A	223,–	21,–	244,–
Castor Set, polyamide, Load capacity 1350 kg / castor set	A	192,–	15,–	207,–
BSS 150, hot-dip galvanized	A	1166,–	201,–	1367,–
Lid, galvanized	A	223,–	21,–	244,–
Castor Set, polyamide, Load capacity 1350 kg / castor set	A	192,–	15,–	207,–
BSS 200, painted	A	1024,–	201,–	1225,–
Lid, galvanized	A	284,–	26,–	310,–
Castor Set, polyamide, Load capacity 1350 kg / castor set	A	192,–	15,–	207,–
BSS 200, hot-dip galvanized	A	1371,–	291,–	1662,–
Lid, galvanized	A	284,–	26,–	310,–
Castor Set, polyamide, Load capacity 1350 kg / castor set	A	192,–	15,–	207,–

Traverse For Stacking Tippers Type BST	Category	Price	Freight charges	Price including freight charges
BST 30, painted	A	332,–	130,–	462,–
Traverse Stand Type TS, hot-dip galvanized	A	78,–	8,–	86,–
BST 55, painted	A	354,–	130,–	484,–
Traverse Stand Type TS, hot-dip galvanized	A	78,–	9,–	87,–
BST 70, painted	A	354,–	130,–	484,–
Traverse Stand Type TS, hot-dip galvanized	A	78,–	9,–	87,–
BST 90, painted	A	368,–	130,–	498,–
Traverse Stand Type TS, hot-dip galvanized	A	78,–	9,–	87,–
BST 150, painted	A	551,–	201,–	752,–
Traverse Stand Type TS, hot-dip galvanized	A	78,–	9,–	87,–
BST 200, painted	A	612,–	201,–	813,–
Traverse Stand Type TS, hot-dip galvanized	A	78,–	9,–	87,–

Traverse For Stacking Tippers Type BST-H	Category	Price	Freight charges	Price including freight charges
BST-H 30, painted	A	2127,–	201,–	2328,–
Traverse Stand Type TS, hot-dip galvanized	A	78,–	8,–	86,–
BST-H 55, painted	A	2257,–	201,–	2458,–
Traverse Stand Type TS, hot-dip galvanized	A	78,–	8,–	86,–
BST-H 70, painted	A	2257,–	201,–	2458,–
Traverse Stand Type TS, hot-dip galvanized	A	78,–	8,–	86,–
BST-H 90, painted	A	2374,–	201,–	2575,–
Traverse Stand Type TS, hot-dip galvanized	A	78,–	8,–	86,–

Prices in EUR, valid EXW DE-46354 Südlohn, DE-38820 Halberstadt, unpacked
Freight charges valid CPT Spain, islands and oversea territories excluded

BAUER GmbH
Eichendorffstr. 62
46354 Südlohn, Germany

Tel. +49 2862 70 90
info@bauer-suedlohn.com
www.bauer-suedlohn.com

Geschäftsführer
Patrick Bauer, Pascal Bauer
Amtsgericht Coesfeld HRB 5259

TÜVNORD
TÜV NORD CERT GmbH
DIN EN ISO 9001
tuev-nord.de

Price List 0726 en-ES
Forklift Truck Attachments

Traverse For Stacking Tippers Type BST-H	Category	Price	Freight charges	Price including freight charges
BST-H 150, painted	A	2700,–	291,–	2991,–
Traverse Stand Type TS, hot-dip galvanized	A	78,–	9,–	87,–
BST-H 200, painted	A	2972,–	291,–	3263,–
Traverse Stand Type TS, hot-dip galvanized	A	78,–	9,–	87,–

Traverse For Stacking Tippers Type BST-U	Category	Price	Freight charges	Price including freight charges
BST-U 30, painted	A	956,–	201,–	1157,–
BST-U 55, painted	A	1020,–	201,–	1221,–
BST-U 70, painted	A	1020,–	201,–	1221,–
BST-U 90, painted	A	1047,–	201,–	1248,–

Beam Traverse Type BT	Category	Price	Freight charges	Price including freight charges
BT 3001, painted	A	1877,–	282,–	2159,–
Support frames, hot-dip galvanized	A	276,–	130,–	406,–
BT 3002, painted	A	2117,–	282,–	2399,–
Support frames, hot-dip galvanized	A	276,–	130,–	406,–
BT 3003, painted	A	2276,–	282,–	2558,–
Support frames, hot-dip galvanized	A	276,–	130,–	406,–
BT 3005, painted	A	2596,–	372,–	2968,–
Support frames, hot-dip galvanized	A	276,–	130,–	406,–

Filling Hopper Type BTM	Category	Price	Freight charges	Price including freight charges
BTM, painted	A	2461,–	357,–	2818,–

Filling Hopper Type BTS	Category	Price	Freight charges	Price including freight charges
BTS, painted	A	2107,–	357,–	2464,–

Bin Type C	Category	Price	Freight charges	Price including freight charges
C 30, painted	A	422,–	130,–	552,–
C 30, hot-dip galvanized	A	463,–	130,–	593,–
C 80, painted	A	607,–	130,–	737,–
C 80, hot-dip galvanized	A	653,–	130,–	783,–

Swarf Bin Type CS	Category	Price	Freight charges	Price including freight charges
CS 30, painted	A	486,–	130,–	616,–
CS 30, hot-dip galvanized	A	532,–	130,–	662,–
CS 80, painted	A	717,–	130,–	847,–
CS 80, hot-dip galvanized	A	766,–	201,–	967,–

Shovel Type DGS	Category	Price	Freight charges	Price including freight charges
DGS 500, painted	A	2655,–	291,–	2946,–
DGS 700, painted	A	2685,–	291,–	2976,–
DGS 950, painted	A	2723,–	357,–	3080,–
DGS 1200, painted	A	2924,–	357,–	3281,–

Prices in EUR, valid EXW DE-46354 Südlohn, DE-38820 Halberstadt, unpacked
Freight charges valid CPT Spain, islands and oversea territories excluded

BAUER GmbH
Eichendorffstr. 62
46354 Südlohn, Germany

Tel. +49 2862 70 90
info@bauer-suedlohn.com
www.bauer-suedlohn.com

Geschäftsführer
Patrick Bauer, Pascal Bauer
Amtsgericht Coesfeld HRB 5259

TÜVNORD
TÜV NORD CERT GmbH
DIN EN ISO 9001
tuev-nord.de

Price List 0726 en-ES
Forklift Truck Attachments

Tilting Container Type DUO	Category	Price	Freight charges	Price including freight charges
DUO, painted	A	1867,–	291,–	2158,–
Lid, galvanized	A	236,–	27,–	263,–
Castor Set, polyamide, Load capacity 1350 kg / castor set	A	192,–	15,–	207,–
Set of 5 self-adhesive stickers with symbols for: glass, paper, plastic, metal, residual waste	A	29,–	on request	on request

Tilting Container Type EXPO®	Category	Price	Freight charges	Price including freight charges
EXPO 150, painted	A	608,–	130,–	738,–
Lid, galvanized	A	174,–	18,–	192,–
Castor Set, polyamide, Load capacity 1050 kg / castor set	A	156,–	15,–	171,–
Skip Body Welded Oil and Watertight	A	78,–	0,–	78,–
EXPO 150, hot-dip galvanized	A	717,–	130,–	847,–
Lid, galvanized	A	174,–	18,–	192,–
Castor Set, polyamide, Load capacity 1050 kg / castor set	A	156,–	15,–	171,–
Skip Body Welded Oil and Watertight	A	78,–	0,–	78,–
EXPO 225, painted	A	662,–	130,–	792,–
Lid, galvanized	A	174,–	18,–	192,–
Castor Set, polyamide, Load capacity 1050 kg / castor set	A	156,–	15,–	171,–
Skip Body Welded Oil and Watertight	A	78,–	0,–	78,–
EXPO 225, hot-dip galvanized	A	785,–	130,–	915,–
Lid, galvanized	A	174,–	18,–	192,–
Castor Set, polyamide, Load capacity 1050 kg / castor set	A	156,–	15,–	171,–
Skip Body Welded Oil and Watertight	A	78,–	0,–	78,–
EXPO 275, painted	A	691,–	130,–	821,–
Lid, galvanized	A	174,–	18,–	192,–
Castor Set, polyamide, Load capacity 1050 kg / castor set	A	156,–	15,–	171,–
Skip Body Welded Oil and Watertight	A	78,–	0,–	78,–
EXPO 275, hot-dip galvanized	A	826,–	130,–	956,–
Lid, galvanized	A	174,–	18,–	192,–
Castor Set, polyamide, Load capacity 1050 kg / castor set	A	156,–	15,–	171,–
Skip Body Welded Oil and Watertight	A	78,–	0,–	78,–
EXPO 300, painted	A	623,–	201,–	824,–
Lid, galvanized	A	174,–	18,–	192,–
Castor Set, polyamide, Load capacity 1350 kg / castor set	A	192,–	15,–	207,–
Skip Body Welded Oil and Watertight	A	78,–	0,–	78,–
EXPO 300, hot-dip galvanized	A	798,–	201,–	999,–
Lid, galvanized	A	174,–	18,–	192,–
Castor Set, polyamide, Load capacity 1350 kg / castor set	A	192,–	15,–	207,–
Skip Body Welded Oil and Watertight	A	78,–	0,–	78,–
EXPO 600, painted	A	733,–	201,–	934,–
Lid, galvanized	A	196,–	22,–	218,–
Castor Set, polyamide, Load capacity 1350 kg / castor set	A	192,–	15,–	207,–
Skip Body Welded Oil and Watertight	A	78,–	0,–	78,–
EXPO 600, hot-dip galvanized	A	879,–	201,–	1080,–
Lid, galvanized	A	196,–	22,–	218,–
Castor Set, polyamide, Load capacity 1350 kg / castor set	A	192,–	15,–	207,–
Skip Body Welded Oil and Watertight	A	78,–	0,–	78,–

Prices in EUR, valid EXW DE-46354 Südlohn, DE-38820 Halberstadt, unpacked
Freight charges valid CPT Spain, islands and oversea territories excluded

BAUER GmbH
Eichendorffstr. 62
46354 Südlohn, Germany

Tel. +49 2862 70 90
info@bauer-suedlohn.com
www.bauer-suedlohn.com

Geschäftsführer
Patrick Bauer, Pascal Bauer
Amtsgericht Coesfeld HRB 5259

TÜVNORD
TÜV NORD CERT GmbH
DIN EN ISO 9001
tuev-nord.de

Price List 0726 en-ES
Forklift Truck Attachments

Tilting Container Type EXPO®	Category	Price	Freight charges	Price including freight charges
EXPO 900, painted	A	818,–	201,–	1019,–
Lid, galvanized	A	223,–	27,–	250,–
Castor Set, polyamide, Load capacity 1350 kg / castor set	A	192,–	15,–	207,–
Skip Body Welded Oil and Watertight	A	78,–	0,–	78,–
EXPO 900, hot-dip galvanized	A	964,–	201,–	1165,–
Lid, galvanized	A	223,–	27,–	250,–
Castor Set, polyamide, Load capacity 1350 kg / castor set	A	192,–	15,–	207,–
Skip Body Welded Oil and Watertight	A	78,–	0,–	78,–
EXPO 1200, painted	A	885,–	291,–	1176,–
Lid, galvanized	A	223,–	26,–	249,–
Castor Set, polyamide, Load capacity 1350 kg / castor set	A	192,–	15,–	207,–
Skip Body Welded Oil and Watertight	A	121,–	0,–	121,–
EXPO 1200, hot-dip galvanized	A	1042,–	291,–	1333,–
Lid, galvanized	A	223,–	26,–	249,–
Castor Set, polyamide, Load capacity 1350 kg / castor set	A	192,–	15,–	207,–
Skip Body Welded Oil and Watertight	A	121,–	0,–	121,–
EXPO 1700, painted	A	1202,–	291,–	1493,–
Lid, galvanized	A	276,–	33,–	309,–
Castor Set, polyamide, Load capacity 1350 kg / castor set	A	192,–	15,–	207,–
Skip Body Welded Oil and Watertight	A	121,–	0,–	121,–
EXPO 1700, hot-dip galvanized	A	1435,–	291,–	1726,–
Lid, galvanized	A	276,–	33,–	309,–
Castor Set, polyamide, Load capacity 1350 kg / castor set	A	192,–	15,–	207,–
Skip Body Welded Oil and Watertight	A	121,–	0,–	121,–
EXPO 2100, painted	A	1325,–	291,–	1616,–
Lid, galvanized	A	360,–	36,–	396,–
Castor Set, polyamide, Load capacity 1350 kg / castor set	A	192,–	15,–	207,–
Skip Body Welded Oil and Watertight	A	121,–	0,–	121,–
EXPO 2100, hot-dip galvanized	A	1606,–	291,–	1897,–
Lid, galvanized	A	360,–	36,–	396,–
Castor Set, polyamide, Load capacity 1350 kg / castor set	A	192,–	15,–	207,–
Skip Body Welded Oil and Watertight	A	121,–	0,–	121,–

Swarf Tilting Container Type EXPO®-E	Category	Price	Freight charges	Price including freight charges
EXPO-E 150, painted	A	729,–	130,–	859,–
Lid, galvanized	A	174,–	18,–	192,–
Castor Set, polyamide, Load capacity 1050 kg / castor set	A	156,–	15,–	171,–
EXPO-E 150, hot-dip galvanized	A	837,–	130,–	967,–
Lid, galvanized	A	174,–	18,–	192,–
Castor Set, polyamide, Load capacity 1050 kg / castor set	A	156,–	15,–	171,–
EXPO-E 225, painted	A	782,–	130,–	912,–
Lid, galvanized	A	174,–	18,–	192,–
Castor Set, polyamide, Load capacity 1050 kg / castor set	A	156,–	15,–	171,–
EXPO-E 225, hot-dip galvanized	A	907,–	130,–	1037,–
Lid, galvanized	A	174,–	18,–	192,–
Castor Set, polyamide, Load capacity 1050 kg / castor set	A	156,–	15,–	171,–

Prices in EUR, valid EXW DE-46354 Südlohn, DE-38820 Halberstadt, unpacked
Freight charges valid CPT Spain, islands and oversea territories excluded

BAUER GmbH
Eichendorffstr. 62
46354 Südlohn, Germany

Tel. +49 2862 70 90
info@bauer-suedlohn.com
www.bauer-suedlohn.com

Geschäftsführer
Patrick Bauer, Pascal Bauer
Amtsgericht Coesfeld HRB 5259

TÜVNORD
TÜV NORD CERT GmbH
DIN EN ISO 9001
tuev-nord.de

Price List 0726 en-ES
Forklift Truck Attachments

Swarf Tilting Container Type EXPO®-E	Category	Price	Freight charges	Price including freight charges
EXPO-E 275, painted	A	812,–	130,–	942,–
Lid, galvanized	A	174,–	18,–	192,–
Castor Set, polyamide, Load capacity 1050 kg / castor set	A	156,–	15,–	171,–
EXPO-E 275, hot-dip galvanized	A	944,–	130,–	1074,–
Lid, galvanized	A	174,–	18,–	192,–
Castor Set, polyamide, Load capacity 1050 kg / castor set	A	156,–	15,–	171,–
EXPO-E 300, painted	A	744,–	201,–	945,–
Lid, galvanized	A	174,–	18,–	192,–
Castor Set, polyamide, Load capacity 1350 kg / castor set	A	192,–	15,–	207,–
EXPO-E 300, hot-dip galvanized	A	919,–	201,–	1120,–
Lid, galvanized	A	174,–	18,–	192,–
Castor Set, polyamide, Load capacity 1350 kg / castor set	A	192,–	15,–	207,–
EXPO-E 600, painted	A	853,–	201,–	1054,–
Lid, galvanized	A	196,–	22,–	218,–
Castor Set, polyamide, Load capacity 1350 kg / castor set	A	192,–	15,–	207,–
EXPO-E 600, hot-dip galvanized	A	999,–	201,–	1200,–
Lid, galvanized	A	196,–	22,–	218,–
Castor Set, polyamide, Load capacity 1350 kg / castor set	A	192,–	15,–	207,–
EXPO-E 900, painted	A	938,–	201,–	1139,–
Lid, galvanized	A	223,–	27,–	250,–
Castor Set, polyamide, Load capacity 1350 kg / castor set	A	192,–	15,–	207,–
EXPO-E 900, hot-dip galvanized	A	1085,–	201,–	1286,–
Lid, galvanized	A	223,–	27,–	250,–
Castor Set, polyamide, Load capacity 1350 kg / castor set	A	192,–	15,–	207,–
EXPO-E 1200, painted	A	1048,–	291,–	1339,–
Lid, galvanized	A	223,–	26,–	249,–
Castor Set, polyamide, Load capacity 1350 kg / castor set	A	192,–	15,–	207,–
EXPO-E 1200, hot-dip galvanized	A	1204,–	291,–	1495,–
Lid, galvanized	A	223,–	26,–	249,–
Castor Set, polyamide, Load capacity 1350 kg / castor set	A	192,–	15,–	207,–
EXPO-E 1700, painted	A	1365,–	291,–	1656,–
Lid, galvanized	A	276,–	33,–	309,–
Castor Set, polyamide, Load capacity 1350 kg / castor set	A	192,–	15,–	207,–
EXPO-E 1700, hot-dip galvanized	A	1598,–	291,–	1889,–
Lid, galvanized	A	276,–	33,–	309,–
Castor Set, polyamide, Load capacity 1350 kg / castor set	A	192,–	15,–	207,–
EXPO-E 2100, painted	A	1488,–	291,–	1779,–
Lid, galvanized	A	360,–	36,–	396,–
Castor Set, polyamide, Load capacity 1350 kg / castor set	A	192,–	15,–	207,–
EXPO-E 2100, hot-dip galvanized	A	1768,–	291,–	2059,–
Lid, galvanized	A	360,–	36,–	396,–
Castor Set, polyamide, Load capacity 1350 kg / castor set	A	192,–	15,–	207,–

Container With Drop Away Base Type FB	Category	Price	Freight charges	Price including freight charges
FB 500, painted	A	809,–	201,–	1010,–
Lid, galvanized	A	196,–	15,–	211,–

Prices in EUR, valid EXW DE-46354 Südlohn, DE-38820 Halberstadt, unpacked
Freight charges valid CPT Spain, islands and oversea territories excluded

BAUER GmbH
Eichendorffstr. 62
46354 Südlohn, Germany

Tel. +49 2862 70 90
info@bauer-suedlohn.com
www.bauer-suedlohn.com

Geschäftsführer
Patrick Bauer, Pascal Bauer
Amtsgericht Coesfeld HRB 5259

TÜVNORD
TÜV NORD CERT GmbH
DIN EN ISO 9001
tuev-nord.de

Price List 0726 en-ES
Forklift Truck Attachments

Container With Drop Away Base Type FB	Category	Price	Freight charges	Price including freight charges
Castor Set, polyamide, Load capacity 1350 kg / castor set	A	192,–	15,–	207,–
Guiding Plates, galvanized	A	116,–	12,–	128,–
FB 500, hot-dip galvanized	A	994,–	201,–	1195,–
Lid, galvanized	A	196,–	15,–	211,–
Castor Set, polyamide, Load capacity 1350 kg / castor set	A	192,–	15,–	207,–
Guiding Plates, galvanized	A	116,–	12,–	128,–
FB 750, painted	A	880,–	201,–	1081,–
Lid, galvanized	A	196,–	15,–	211,–
Castor Set, polyamide, Load capacity 1350 kg / castor set	A	192,–	15,–	207,–
Guiding Plates, galvanized	A	116,–	12,–	128,–
FB 750, hot-dip galvanized	A	1075,–	201,–	1276,–
Lid, galvanized	A	196,–	15,–	211,–
Castor Set, polyamide, Load capacity 1350 kg / castor set	A	192,–	15,–	207,–
Guiding Plates, galvanized	A	116,–	12,–	128,–
FB 1000, painted	A	942,–	201,–	1143,–
Lid, galvanized	A	238,–	18,–	256,–
Castor Set, polyamide, Load capacity 1350 kg / castor set	A	192,–	15,–	207,–
Guiding Plates, galvanized	A	116,–	12,–	128,–
FB 1000, hot-dip galvanized	A	1157,–	201,–	1358,–
Lid, galvanized	A	238,–	18,–	256,–
Castor Set, polyamide, Load capacity 1350 kg / castor set	A	192,–	15,–	207,–
Guiding Plates, galvanized	A	116,–	12,–	128,–
FB 1500, painted	A	1105,–	291,–	1396,–
Lid, galvanized	A	351,–	21,–	372,–
Castor Set, polyamide, Load capacity 1350 kg / castor set	A	192,–	15,–	207,–
Guiding Plates, galvanized	A	116,–	12,–	128,–
FB 1500, hot-dip galvanized	A	1392,–	291,–	1683,–
Lid, galvanized	A	351,–	21,–	372,–
Castor Set, polyamide, Load capacity 1350 kg / castor set	A	192,–	15,–	207,–
Guiding Plates, galvanized	A	116,–	12,–	128,–
FB 2000, painted	A	1192,–	291,–	1483,–
Lid, galvanized	A	351,–	21,–	372,–
Castor Set, polyamide, Load capacity 1350 kg / castor set	A	192,–	15,–	207,–
Guiding Plates, galvanized	A	116,–	12,–	128,–
FB 2000, hot-dip galvanized	A	1512,–	291,–	1803,–
Lid, galvanized	A	351,–	21,–	372,–
Castor Set, polyamide, Load capacity 1350 kg / castor set	A	192,–	15,–	207,–
Guiding Plates, galvanized	A	116,–	12,–	128,–

Drum Tipper Type FD/L-HK	Category	Price	Freight charges	Price including freight charges
FD/L-HK, painted	B	2324,–	201,–	2525,–
FD/L-HK, hot-dip galvanized	B	2765,–	201,–	2966,–

Drum Tipper Type FD/L-K	Category	Price	Freight charges	Price including freight charges
FD/L-K, painted	B	2515,–	201,–	2716,–

Prices in EUR, valid EXW DE-46354 Südlohn, DE-38820 Halberstadt, unpacked
Freight charges valid CPT Spain, islands and oversea territories excluded

BAUER GmbH
Eichendorffstr. 62
46354 Südlohn, Germany

Tel. +49 2862 70 90
info@bauer-suedlohn.com
www.bauer-suedlohn.com

Geschäftsführer
Patrick Bauer, Pascal Bauer
Amtsgericht Coesfeld HRB 5259

TÜVNORD
TÜV NORD CERT GmbH
DIN EN ISO 9001
tuev-nord.de

Price List 0726 en-ES
Forklift Truck Attachments

Drum Tipper Type FD/L-K	Category	Price	Freight charges	Price including freight charges
FD/L-K, hot-dip galvanized	B	2965,–	201,–	3166,–

Drum Tipper Type FD-H	Category	Price	Freight charges	Price including freight charges
FD-H, painted	B	2593,–	130,–	2723,–
FD-H, hot-dip galvanized	B	2828,–	130,–	2958,–

Drum Tipper Type FD-HK	Category	Price	Freight charges	Price including freight charges
FD-HK, painted	B	1997,–	130,–	2127,–
FD-HK, hot-dip galvanized	B	2237,–	130,–	2367,–

Drum Tipper Type FD-K	Category	Price	Freight charges	Price including freight charges
FD-K, painted	B	2188,–	130,–	2318,–
FD-K, hot-dip galvanized	B	2437,–	130,–	2567,–

Drum Tipper Type FD-SK	Category	Price	Freight charges	Price including freight charges
FD-SK, painted	B	1997,–	130,–	2127,–
FD-SK, hot-dip galvanized	B	2237,–	130,–	2367,–

Drum Jack Type FH	Category	Price	Freight charges	Price including freight charges
FH-I 120, painted	B	1645,–	130,–	1775,–
FH-I 120, hot-dip galvanized	B	1823,–	130,–	1953,–
FH-I 220, painted	B	1645,–	130,–	1775,–
FH-I 220, hot-dip galvanized	B	1852,–	130,–	1982,–
FH-II 120, painted	B	2402,–	130,–	2532,–
FH-II 120, hot-dip galvanized	B	2673,–	130,–	2803,–
FH-II 220, painted	B	2402,–	130,–	2532,–
FH-II 220, hot-dip galvanized	B	2729,–	130,–	2859,–

Drum Gripper Type FK	Category	Price	Freight charges	Price including freight charges
FK-I, painted	B	1251,–	130,–	1381,–
FK-I, hot-dip galvanized	B	1524,–	130,–	1654,–
FK-II, painted	B	1488,–	201,–	1689,–
FK-II, hot-dip galvanized	B	1882,–	201,–	2083,–

Drum Clamp Type FKL	Category	Price	Freight charges	Price including freight charges
FKL, painted	B	480,–	60,–	540,–

Drum Tipper Type FLEX-HK	Category	Price	Freight charges	Price including freight charges
FLEX-HK, painted	B	2164,–	130,–	2294,–
Shelf Drum Pallet RP, galvanized	B	145,–	60,–	205,–
FLEX-HK, hot-dip galvanized	B	2338,–	130,–	2468,–
Shelf Drum Pallet RP, galvanized	B	145,–	60,–	205,–

Prices in EUR, valid EXW DE-46354 Südlohn, DE-38820 Halberstadt, unpacked
Freight charges valid CPT Spain, islands and oversea territories excluded

BAUER GmbH
Eichendorffstr. 62
46354 Südlohn, Germany

Tel. +49 2862 70 90
info@bauer-suedlohn.com
www.bauer-suedlohn.com

Geschäftsführer
Patrick Bauer, Pascal Bauer
Amtsgericht Coesfeld HRB 5259

TÜVNORD
TÜV NORD CERT GmbH
DIN EN ISO 9001
tuev-nord.de

Price List 0726 en-ES
Forklift Truck Attachments

Drum Tipper Type FLEX-K	Category	Price	Freight charges	Price including freight charges
FLEX-K, painted	B	2363,–	130,–	2493,–
Shelf Drum Pallet RP, galvanized	B	145,–	60,–	205,–
FLEX-K, hot-dip galvanized	B	2533,–	130,–	2663,–
Shelf Drum Pallet RP, galvanized	B	145,–	60,–	205,–

Drum Traverse Type FT/M	Category	Price	Freight charges	Price including freight charges
FT/M, galvanized	B	316,–	60,–	376,–

Drum Traverse Type FT/MK	Category	Price	Freight charges	Price including freight charges
FT/MK, galvanized	B	362,–	60,–	422,–

Drum Turner Type FW	Category	Price	Freight charges	Price including freight charges
FW-I, painted	B	1389,–	201,–	1590,–
FW-I, hot-dip galvanized	B	1803,–	201,–	2004,–
FW-II, painted	B	1945,–	201,–	2146,–
FW-II, hot-dip galvanized	B	2533,–	201,–	2734,–

Drum Turning Claw Type FWZ	Category	Price	Freight charges	Price including freight charges
FWZ-60, painted	B	1355,–	130,–	1485,–
FWZ-60, galvanized	B	1335,–	130,–	1465,–
FWZ-200, painted	B	1397,–	130,–	1527,–
FWZ-200, galvanized	B	1376,–	130,–	1506,–

Fork Extensions Type GG	Category	Price	Freight charges	Price including freight charges
GG 80/40 (1600 mm long), painted	A	541,–	130,–	671,–
GG 80/40 (1800 mm long), painted	A	570,–	130,–	700,–
GG 80/40 (2000 mm long), painted	A	601,–	130,–	731,–
GG 100/40 (1600 mm long), painted	A	541,–	130,–	671,–
GG 100/40 (1800 mm long), painted	A	570,–	130,–	700,–
GG 100/40 (2000 mm long), painted	A	601,–	130,–	731,–
GG 100/45 (1600 mm long), painted	A	541,–	130,–	671,–
GG 100/45 (1800 mm long), painted	A	570,–	130,–	700,–
GG 100/45 (2000 mm long), painted	A	601,–	130,–	731,–
GG 100/50 (1600 mm long), painted	A	541,–	130,–	671,–
GG 100/50 (1800 mm long), painted	A	570,–	130,–	700,–
GG 100/50 (2000 mm long), painted	A	601,–	201,–	802,–
GG 120/40 (1600 mm long), painted	A	570,–	130,–	700,–
GG 120/40 (1800 mm long), painted	A	601,–	201,–	802,–
GG 120/40 (2000 mm long), painted	A	645,–	201,–	846,–
GG 120/50 (1600 mm long), painted	A	570,–	130,–	700,–
GG 120/50 (1800 mm long), painted	A	601,–	201,–	802,–
GG 120/50 (2000 mm long), painted	A	645,–	201,–	846,–
GG 125/45 (1600 mm long), painted	A	570,–	130,–	700,–
GG 125/45 (1800 mm long), painted	A	601,–	201,–	802,–
GG 125/45 (2000 mm long), painted	A	645,–	201,–	846,–

Prices in EUR, valid EXW DE-46354 Südlohn, DE-38820 Halberstadt, unpacked
Freight charges valid CPT Spain, islands and oversea territories excluded

BAUER GmbH
Eichendorffstr. 62
46354 Südlohn, Germany

Tel. +49 2862 70 90
info@bauer-suedlohn.com
www.bauer-suedlohn.com

Geschäftsführer
Patrick Bauer, Pascal Bauer
Amtsgericht Coesfeld HRB 5259

TÜVNORD
TÜV NORD CERT GmbH
DIN EN ISO 9001
tuev-nord.de

Price List 0726 en-ES
Forklift Truck Attachments

Fork Extensions Type GG	Category	Price	Freight charges	Price including freight charges
GG 125/50 (1600 mm long), painted	A	570,–	130,–	700,–
GG 125/50 (1800 mm long), painted	A	601,–	201,–	802,–
GG 125/50 (2000 mm long), painted	A	645,–	201,–	846,–
GG 150/50 (1600 mm long), painted	A	634,–	201,–	835,–
GG 150/50 (1800 mm long), painted	A	680,–	201,–	881,–
GG 150/50 (2000 mm long), painted	A	713,–	201,–	914,–
GG 150/70 (1600 mm long), painted	A	634,–	201,–	835,–
GG 150/70 (1800 mm long), painted	A	680,–	201,–	881,–
GG 150/70 (2000 mm long), painted	A	713,–	201,–	914,–

Fork Extensions Type GO	Category	Price	Freight charges	Price including freight charges
GO 80/40 (1600 mm long), painted	A	390,–	130,–	520,–
GO 80/40 (1800 mm long), painted	A	396,–	130,–	526,–
GO 80/40 (2000 mm long), painted	A	411,–	130,–	541,–
GO 100/40 (1600 mm long), painted	A	390,–	130,–	520,–
GO 100/40 (1800 mm long), painted	A	396,–	130,–	526,–
GO 100/40 (2000 mm long), painted	A	411,–	130,–	541,–
GO 100/45 (1600 mm long), painted	A	390,–	130,–	520,–
GO 100/45 (1800 mm long), painted	A	396,–	130,–	526,–
GO 100/45 (2000 mm long), painted	A	411,–	130,–	541,–
GO 100/50 (1600 mm long), painted	A	390,–	130,–	520,–
GO 100/50 (1800 mm long), painted	A	396,–	130,–	526,–
GO 100/50 (2000 mm long), painted	A	411,–	130,–	541,–
GO 120/40 (1600 mm long), painted	A	396,–	130,–	526,–
GO 120/40 (1800 mm long), painted	A	418,–	130,–	548,–
GO 120/40 (2000 mm long), painted	A	435,–	130,–	565,–
GO 120/50 (1600 mm long), painted	A	396,–	130,–	526,–
GO 120/50 (1800 mm long), painted	A	418,–	130,–	548,–
GO 120/50 (2000 mm long), painted	A	435,–	130,–	565,–
GO 125/45 (1600 mm long), painted	A	396,–	130,–	526,–
GO 125/45 (1800 mm long), painted	A	418,–	130,–	548,–
GO 125/45 (2000 mm long), painted	A	435,–	130,–	565,–
GO 125/50 (1600 mm long), painted	A	396,–	130,–	526,–
GO 125/50 (1800 mm long), painted	A	418,–	130,–	548,–
GO 125/50 (2000 mm long), painted	A	435,–	130,–	565,–
GO 150/50 (1600 mm long), painted	A	475,–	130,–	605,–
GO 150/50 (1800 mm long), painted	A	516,–	130,–	646,–
GO 150/50 (2000 mm long), painted	A	555,–	130,–	685,–
GO 150/70 (1600 mm long), painted	A	475,–	130,–	605,–
GO 150/70 (1800 mm long), painted	A	516,–	130,–	646,–
GO 150/70 (2000 mm long), painted	A	555,–	130,–	685,–

Tilting Container Type GU	Category	Price	Freight charges	Price including freight charges
GU 300, painted	A	655,–	201,–	856,–
Lid, galvanized	A	98,–	18,–	116,–

Prices in EUR, valid EXW DE-46354 Südlohn, DE-38820 Halberstadt, unpacked
Freight charges valid CPT Spain, islands and oversea territories excluded

BAUER GmbH
Eichendorffstr. 62
46354 Südlohn, Germany

Tel. +49 2862 70 90
info@bauer-suedlohn.com
www.bauer-suedlohn.com

Geschäftsführer
Patrick Bauer, Pascal Bauer
Amtsgericht Coesfeld HRB 5259

TÜVNORD
TÜV NORD CERT GmbH
DIN EN ISO 9001
tuev-nord.de

Price List 0726 en-ES
Forklift Truck Attachments

Tilting Container Type GU	Category	Price	Freight charges	Price including freight charges
Castor Set, polyamide, Load capacity 1350 kg / castor set	A	192,–	15,–	207,–
Skip Body Welded Oil and Watertight	A	78,–	0,–	78,–
Crane lifting eyes for use with a crane	A	106,–	8,–	114,–
Support legs, 100 mm ground leeway	A	70,–	8,–	78,–
GU 300, hot-dip galvanized	A	866,–	201,–	1067,–
Lid, galvanized	A	98,–	18,–	116,–
Castor Set, polyamide, Load capacity 1350 kg / castor set	A	192,–	15,–	207,–
Skip Body Welded Oil and Watertight	A	78,–	0,–	78,–
Crane lifting eyes for use with a crane	A	106,–	8,–	114,–
Support legs, 100 mm ground leeway	A	70,–	8,–	78,–
GU 500, painted	A	891,–	201,–	1092,–
Lid, galvanized	A	98,–	18,–	116,–
Castor Set, polyamide, Load capacity 1350 kg / castor set	A	192,–	15,–	207,–
Skip Body Welded Oil and Watertight	A	78,–	0,–	78,–
Adjustable dumping brake	A	464,–	10,–	474,–
Crane lifting eyes for use with a crane	A	106,–	8,–	114,–
Support legs, 100 mm ground leeway	A	70,–	8,–	78,–
GU 500, hot-dip galvanized	A	1160,–	201,–	1361,–
Lid, galvanized	A	98,–	18,–	116,–
Castor Set, polyamide, Load capacity 1350 kg / castor set	A	192,–	15,–	207,–
Skip Body Welded Oil and Watertight	A	78,–	0,–	78,–
Adjustable dumping brake	A	464,–	10,–	474,–
Crane lifting eyes for use with a crane	A	106,–	8,–	114,–
Support legs, 100 mm ground leeway	A	70,–	8,–	78,–
GU 750, painted	A	1052,–	201,–	1253,–
Lid, galvanized	A	139,–	26,–	165,–
Castor Set, polyamide, Load capacity 1350 kg / castor set	A	192,–	15,–	207,–
Skip Body Welded Oil and Watertight	A	78,–	0,–	78,–
Adjustable dumping brake	A	464,–	10,–	474,–
Crane lifting eyes for use with a crane	A	106,–	8,–	114,–
Support legs, 100 mm ground leeway	A	70,–	8,–	78,–
GU 750, hot-dip galvanized	A	1371,–	201,–	1572,–
Lid, galvanized	A	139,–	26,–	165,–
Castor Set, polyamide, Load capacity 1350 kg / castor set	A	192,–	15,–	207,–
Skip Body Welded Oil and Watertight	A	78,–	0,–	78,–
Adjustable dumping brake	A	464,–	10,–	474,–
Crane lifting eyes for use with a crane	A	106,–	8,–	114,–
Support legs, 100 mm ground leeway	A	70,–	8,–	78,–
GU 1000, painted	A	1163,–	201,–	1364,–
Lid, galvanized	A	192,–	27,–	219,–
Castor Set, polyamide, Load capacity 1350 kg / castor set	A	192,–	15,–	207,–
Skip Body Welded Oil and Watertight	A	121,–	0,–	121,–
Adjustable dumping brake	A	464,–	10,–	474,–
Crane lifting eyes for use with a crane	A	106,–	8,–	114,–
Support legs, 100 mm ground leeway	A	70,–	8,–	78,–
GU 1000, hot-dip galvanized	A	1647,–	291,–	1938,–

Prices in EUR, valid EXW DE-46354 Südlohn, DE-38820 Halberstadt, unpacked
Freight charges valid CPT Spain, islands and oversea territories excluded

BAUER GmbH
Eichendorffstr. 62
46354 Südlohn, Germany

Tel. +49 2862 70 90
info@bauer-suedlohn.com
www.bauer-suedlohn.com

Geschäftsführer
Patrick Bauer, Pascal Bauer
Amtsgericht Coesfeld HRB 5259

TÜVNORD
TÜV NORD CERT GmbH
DIN EN ISO 9001
tuev-nord.de

Price List 0726 en-ES
Forklift Truck Attachments

Tilting Container Type GU	Category	Price	Freight charges	Price including freight charges
Lid, galvanized	A	192,–	27,–	219,–
Castor Set, polyamide, Load capacity 1350 kg / castor set	A	192,–	15,–	207,–
Skip Body Welded Oil and Watertight	A	121,–	0,–	121,–
Adjustable dumping brake	A	464,–	10,–	474,–
Crane lifting eyes for use with a crane	A	106,–	8,–	114,–
Support legs, 100 mm ground leeway	A	70,–	8,–	78,–
GU 1500, painted	A	1357,–	291,–	1648,–
Lid, galvanized	A	192,–	27,–	219,–
Castor Set, polyamide, Load capacity 1350 kg / castor set	A	192,–	15,–	207,–
Skip Body Welded Oil and Watertight	A	121,–	0,–	121,–
Adjustable dumping brake	A	464,–	10,–	474,–
Crane lifting eyes for use with a crane	A	106,–	8,–	114,–
Support legs, 100 mm ground leeway	A	70,–	8,–	78,–
GU 1500, hot-dip galvanized	A	1769,–	291,–	2060,–
Lid, galvanized	A	192,–	27,–	219,–
Castor Set, polyamide, Load capacity 1350 kg / castor set	A	192,–	15,–	207,–
Skip Body Welded Oil and Watertight	A	121,–	0,–	121,–
Adjustable dumping brake	A	464,–	10,–	474,–
Crane lifting eyes for use with a crane	A	106,–	8,–	114,–
Support legs, 100 mm ground leeway	A	70,–	8,–	78,–
GU 2000, painted	A	1675,–	291,–	1966,–
Lid, galvanized	A	226,–	32,–	258,–
Castor Set, polyamide, Load capacity 1350 kg / castor set	A	192,–	15,–	207,–
Skip Body Welded Oil and Watertight	A	121,–	0,–	121,–
Adjustable dumping brake	A	464,–	10,–	474,–
Crane lifting eyes for use with a crane	A	106,–	8,–	114,–
Support legs, 100 mm ground leeway	A	70,–	8,–	78,–
GU 2000, hot-dip galvanized	A	2200,–	291,–	2491,–
Lid, galvanized	A	226,–	32,–	258,–
Castor Set, polyamide, Load capacity 1350 kg / castor set	A	192,–	15,–	207,–
Skip Body Welded Oil and Watertight	A	121,–	0,–	121,–
Adjustable dumping brake	A	464,–	10,–	474,–
Crane lifting eyes for use with a crane	A	106,–	8,–	114,–
Support legs, 100 mm ground leeway	A	70,–	8,–	78,–

Swarf Tilting Container Type GU-E	Category	Price	Freight charges	Price including freight charges
GU-E 300, painted	A	775,–	201,–	976,–
Lid, galvanized	A	98,–	18,–	116,–
Castor Set, polyamide, Load capacity 1350 kg / castor set	A	192,–	15,–	207,–
Crane lifting eyes for use with a crane	A	106,–	8,–	114,–
Support legs, 100 mm ground leeway	A	70,–	8,–	78,–
GU-E 300, hot-dip galvanized	A	986,–	201,–	1187,–
Lid, galvanized	A	98,–	18,–	116,–
Castor Set, polyamide, Load capacity 1350 kg / castor set	A	192,–	15,–	207,–
Crane lifting eyes for use with a crane	A	106,–	8,–	114,–
Support legs, 100 mm ground leeway	A	70,–	8,–	78,–

Prices in EUR, valid EXW DE-46354 Südlohn, DE-38820 Halberstadt, unpacked
Freight charges valid CPT Spain, islands and oversea territories excluded

BAUER GmbH
Eichendorffstr. 62
46354 Südlohn, Germany

Tel. +49 2862 70 90
info@bauer-suedlohn.com
www.bauer-suedlohn.com

Geschäftsführer
Patrick Bauer, Pascal Bauer
Amtsgericht Coesfeld HRB 5259

TÜVNORD
TÜV NORD CERT GmbH
DIN EN ISO 9001
tuev-nord.de

Price List 0726 en-ES
Forklift Truck Attachments

Swarf Tilting Container Type GU-E	Category	Price	Freight charges	Price including freight charges
GU-E 500, painted	A	1012,–	201,–	1213,–
Lid, galvanized	A	98,–	18,–	116,–
Castor Set, polyamide, Load capacity 1350 kg / castor set	A	192,–	15,–	207,–
Adjustable dumping brake	A	464,–	10,–	474,–
Crane lifting eyes for use with a crane	A	106,–	8,–	114,–
Support legs, 100 mm ground leeway	A	70,–	8,–	78,–
GU-E 500, hot-dip galvanized	A	1280,–	201,–	1481,–
Lid, galvanized	A	98,–	18,–	116,–
Castor Set, polyamide, Load capacity 1350 kg / castor set	A	192,–	15,–	207,–
Adjustable dumping brake	A	464,–	10,–	474,–
Crane lifting eyes for use with a crane	A	106,–	8,–	114,–
Support legs, 100 mm ground leeway	A	70,–	8,–	78,–
GU-E 750, painted	A	1172,–	201,–	1373,–
Lid, galvanized	A	139,–	26,–	165,–
Castor Set, polyamide, Load capacity 1350 kg / castor set	A	192,–	15,–	207,–
Adjustable dumping brake	A	464,–	10,–	474,–
Crane lifting eyes for use with a crane	A	106,–	8,–	114,–
Support legs, 100 mm ground leeway	A	70,–	8,–	78,–
GU-E 750, hot-dip galvanized	A	1491,–	201,–	1692,–
Lid, galvanized	A	139,–	26,–	165,–
Castor Set, polyamide, Load capacity 1350 kg / castor set	A	192,–	15,–	207,–
Adjustable dumping brake	A	464,–	10,–	474,–
Crane lifting eyes for use with a crane	A	106,–	8,–	114,–
Support legs, 100 mm ground leeway	A	70,–	8,–	78,–
GU-E 1000, painted	A	1325,–	201,–	1526,–
Lid, galvanized	A	192,–	27,–	219,–
Castor Set, polyamide, Load capacity 1350 kg / castor set	A	192,–	15,–	207,–
Adjustable dumping brake	A	464,–	10,–	474,–
Crane lifting eyes for use with a crane	A	106,–	8,–	114,–
Support legs, 100 mm ground leeway	A	70,–	8,–	78,–
GU-E 1000, hot-dip galvanized	A	1810,–	291,–	2101,–
Lid, galvanized	A	192,–	27,–	219,–
Castor Set, polyamide, Load capacity 1350 kg / castor set	A	192,–	15,–	207,–
Adjustable dumping brake	A	464,–	10,–	474,–
Crane lifting eyes for use with a crane	A	106,–	8,–	114,–
Support legs, 100 mm ground leeway	A	70,–	8,–	78,–
GU-E 1500, painted	A	1520,–	291,–	1811,–
Lid, galvanized	A	192,–	27,–	219,–
Castor Set, polyamide, Load capacity 1350 kg / castor set	A	192,–	15,–	207,–
Adjustable dumping brake	A	464,–	10,–	474,–
Crane lifting eyes for use with a crane	A	106,–	8,–	114,–
Support legs, 100 mm ground leeway	A	70,–	8,–	78,–
GU-E 1500, hot-dip galvanized	A	1932,–	291,–	2223,–
Lid, galvanized	A	192,–	27,–	219,–
Castor Set, polyamide, Load capacity 1350 kg / castor set	A	192,–	15,–	207,–
Adjustable dumping brake	A	464,–	10,–	474,–

Prices in EUR, valid EXW DE-46354 Südlohn, DE-38820 Halberstadt, unpacked
Freight charges valid CPT Spain, islands and oversea territories excluded

BAUER GmbH
Eichendorffstr. 62
46354 Südlohn, Germany

Tel. +49 2862 70 90
info@bauer-suedlohn.com
www.bauer-suedlohn.com

Geschäftsführer
Patrick Bauer, Pascal Bauer
Amtsgericht Coesfeld HRB 5259

TÜVNORD
TÜV NORD CERT GmbH
DIN EN ISO 9001
tuev-nord.de

Price List 0726 en-ES
Forklift Truck Attachments

Swarf Tilting Container Type GU-E	Category	Price	Freight charges	Price including freight charges
Crane lifting eyes for use with a crane	A	106,–	8,–	114,–
Support legs, 100 mm ground leeway	A	70,–	8,–	78,–
GU-E 2000, painted	A	1838,–	291,–	2129,–
Lid, galvanized	A	226,–	32,–	258,–
Castor Set, polyamide, Load capacity 1350 kg / castor set	A	192,–	15,–	207,–
Adjustable dumping brake	A	464,–	10,–	474,–
Crane lifting eyes for use with a crane	A	106,–	8,–	114,–
Support legs, 100 mm ground leeway	A	70,–	8,–	78,–
GU-E 2000, hot-dip galvanized	A	2362,–	291,–	2653,–
Lid, galvanized	A	226,–	32,–	258,–
Castor Set, polyamide, Load capacity 1350 kg / castor set	A	192,–	15,–	207,–
Adjustable dumping brake	A	464,–	10,–	474,–
Crane lifting eyes for use with a crane	A	106,–	8,–	114,–
Support legs, 100 mm ground leeway	A	70,–	8,–	78,–

Tilting Container Type GU-RZ	Category	Price	Freight charges	Price including freight charges
GU-RZ 30, painted	A	699,–	201,–	900,–
Lid, galvanized	A	95,–	18,–	113,–
GU-RZ 30, hot-dip galvanized	A	779,–	201,–	980,–
Lid, galvanized	A	95,–	18,–	113,–
GU-RZ 55, painted	A	931,–	201,–	1132,–
Lid, galvanized	A	95,–	18,–	113,–
GU-RZ 55, hot-dip galvanized	A	1026,–	201,–	1227,–
Lid, galvanized	A	95,–	18,–	113,–

Fork Protection Type GZS	Category	Price	Freight charges	Price including freight charges
GZS, painted	F	179,–	60,–	239,–

Container With Drop Away Base Type HKB	Category	Price	Freight charges	Price including freight charges
HKB 60, painted	A	1078,–	201,–	1279,–
HKB 70, painted	A	1140,–	201,–	1341,–
HKB 90, painted	A	1417,–	201,–	1618,–

Shovel Type HVR	Category	Price	Freight charges	Price including freight charges
HVR 50, painted	A	3393,–	291,–	3684,–
HVR 75, painted	A	3976,–	357,–	4333,–
HVR 80 L, painted	A	4095,–	357,–	4452,–
HVR 100, painted	A	5033,–	500,–	5533,–
HVR 150, painted	A	6432,–	500,–	6932,–

Kippomat Type KG-A	Category	Price	Freight charges	Price including freight charges
KG-A, hot-dip galvanized	A	3218,–	291,–	3509,–

Kippomat Type KG-B	Category	Price	Freight charges	Price including freight charges
KG-B, hot-dip galvanized	A	3137,–	291,–	3428,–

Prices in EUR, valid EXW DE-46354 Südlohn, DE-38820 Halberstadt, unpacked
Freight charges valid CPT Spain, islands and oversea territories excluded

BAUER GmbH
Eichendorffstr. 62
46354 Südlohn, Germany

Tel. +49 2862 70 90
info@bauer-suedlohn.com
www.bauer-suedlohn.com

Geschäftsführer
Patrick Bauer, Pascal Bauer
Amtsgericht Coesfeld HRB 5259

TÜVNORD
TÜV NORD CERT GmbH
DIN EN ISO 9001
tuev-nord.de

Price List 0726 en-ES
Forklift Truck Attachments

Kippomat Type KG-C	Category	Price	Freight charges	Price including freight charges
KG-C, hot-dip galvanized	A	2081,–	201,–	2282,–

Tipping Skip Type KK	Category	Price	Freight charges	Price including freight charges
KK 250, painted	E	484,–	130,–	614,–
Lid, galvanized	E	136,–	15,–	151,–
Castor Set, polyamide, Load capacity 1050 kg / castor set	A	136,–	15,–	151,–
Castor Set, solid rubber, Load capacity 615 kg / castor set	E	103,–	15,–	118,–
KK 250, hot-dip galvanized	E	534,–	130,–	664,–
Lid, galvanized	E	136,–	15,–	151,–
Castor Set, polyamide, Load capacity 1050 kg / castor set	A	136,–	15,–	151,–
Castor Set, solid rubber, Load capacity 615 kg / castor set	E	103,–	15,–	118,–
KK 400, painted	E	551,–	130,–	681,–
Lid, galvanized	E	156,–	16,–	172,–
Castor Set, polyamide, Load capacity 1050 kg / castor set	A	136,–	15,–	151,–
Castor Set, solid rubber, Load capacity 615 kg / castor set	E	103,–	15,–	118,–
KK 400, hot-dip galvanized	E	600,–	130,–	730,–
Lid, galvanized	E	156,–	16,–	172,–
Castor Set, polyamide, Load capacity 1050 kg / castor set	A	136,–	15,–	151,–
Castor Set, solid rubber, Load capacity 615 kg / castor set	E	103,–	15,–	118,–
KK 600, painted	E	764,–	201,–	965,–
Lid, galvanized	E	173,–	20,–	193,–
Castor Set, polyamide, Load capacity 1050 kg / castor set	A	136,–	15,–	151,–
Castor Set, solid rubber, Load capacity 615 kg / castor set	E	103,–	15,–	118,–
KK 600, hot-dip galvanized	E	865,–	201,–	1066,–
Castor Set, solid rubber, Load capacity 615 kg / castor set	E	103,–	15,–	118,–
Lid, galvanized	E	173,–	20,–	193,–
Castor Set, polyamide, Load capacity 1050 kg / castor set	A	136,–	15,–	151,–
KK 800, painted	E	823,–	201,–	1024,–
Lid, galvanized	E	181,–	21,–	202,–
Castor Set, polyamide, Load capacity 1050 kg / castor set	A	136,–	15,–	151,–
Castor Set, solid rubber, Load capacity 615 kg / castor set	E	103,–	15,–	118,–
KK 800, hot-dip galvanized	E	930,–	201,–	1131,–
Lid, galvanized	E	181,–	21,–	202,–
Castor Set, polyamide, Load capacity 1050 kg / castor set	A	136,–	15,–	151,–
Castor Set, solid rubber, Load capacity 615 kg / castor set	E	103,–	15,–	118,–
KK 1000, painted	E	881,–	201,–	1082,–
Lid, galvanized	E	193,–	22,–	215,–
Castor Set, polyamide, Load capacity 1050 kg / castor set	A	136,–	15,–	151,–
Castor Set, solid rubber, Load capacity 615 kg / castor set	E	103,–	15,–	118,–
KK 1000, hot-dip galvanized	E	1014,–	201,–	1215,–
Lid, galvanized	E	193,–	22,–	215,–
Castor Set, polyamide, Load capacity 1050 kg / castor set	A	136,–	15,–	151,–
Castor Set, solid rubber, Load capacity 615 kg / castor set	E	103,–	15,–	118,–

Prices in EUR, valid EXW DE-46354 Südlohn, DE-38820 Halberstadt, unpacked
Freight charges valid CPT Spain, islands and oversea territories excluded

BAUER GmbH
Eichendorffstr. 62
46354 Südlohn, Germany

Tel. +49 2862 70 90
info@bauer-suedlohn.com
www.bauer-suedlohn.com

Geschäftsführer
Patrick Bauer, Pascal Bauer
Amtsgericht Coesfeld HRB 5259

TÜVNORD
TÜV NORD CERT GmbH
DIN EN ISO 9001
tuev-nord.de

Price List 0726 en-ES
Forklift Truck Attachments

Kippomat Type KM	Category	Price	Freight charges	Price including freight charges
KM, hot-dip galvanized	A	3218,–	201,–	3419,–

Tipping Skip Type KN	Category	Price	Freight charges	Price including freight charges
KN 250, painted	E	484,–	130,–	614,–
Lid, galvanized	E	136,–	15,–	151,–
Castor Set, polyamide, Load capacity 1050 kg / castor set	A	136,–	15,–	151,–
Castor Set, solid rubber, Load capacity 615 kg / castor set	E	103,–	15,–	118,–
KN 250, hot-dip galvanized	E	534,–	130,–	664,–
Lid, galvanized	E	136,–	15,–	151,–
Castor Set, polyamide, Load capacity 1050 kg / castor set	A	136,–	15,–	151,–
Castor Set, solid rubber, Load capacity 615 kg / castor set	E	103,–	15,–	118,–
KN 400, painted	E	551,–	130,–	681,–
Lid, galvanized	E	156,–	16,–	172,–
Castor Set, polyamide, Load capacity 1050 kg / castor set	A	136,–	15,–	151,–
Castor Set, solid rubber, Load capacity 615 kg / castor set	E	103,–	15,–	118,–
KN 400, hot-dip galvanized	E	600,–	130,–	730,–
Lid, galvanized	E	156,–	16,–	172,–
Castor Set, polyamide, Load capacity 1050 kg / castor set	A	136,–	15,–	151,–
Castor Set, solid rubber, Load capacity 615 kg / castor set	E	103,–	15,–	118,–

Tipping Skip Type KS	Category	Price	Freight charges	Price including freight charges
KS 400, painted	E	900,–	201,–	1101,–
KS 550, painted	E	964,–	201,–	1165,–
KS 700, painted	E	1024,–	201,–	1225,–

Extensible Crane Arm Type KT	Category	Price	Freight charges	Price including freight charges
KT 2,5, painted	A	1448,–	201,–	1649,–
KT 2,5, hot-dip galvanized	A	1763,–	291,–	2054,–
KT 5,0, painted	A	1798,–	291,–	2089,–
KT 5,0, hot-dip galvanized	A	2242,–	291,–	2533,–

Extensible Crane Arm Type KTH	Category	Price	Freight charges	Price including freight charges
KTH 2,5, painted	A	1748,–	291,–	2039,–
KTH 2,5, hot-dip galvanized	A	2068,–	291,–	2359,–
KTH 5,0, painted	A	2012,–	291,–	2303,–
KTH 5,0, hot-dip galvanized	A	2373,–	291,–	2664,–

Extensible Crane Arm Type KTH-K	Category	Price	Freight charges	Price including freight charges
KTH-K 2,5, painted	A	1606,–	201,–	1807,–
KTH-K 2,5, hot-dip galvanized	A	1943,–	201,–	2144,–
KTH-K 5,0, painted	A	1852,–	201,–	2053,–
KTH-K 5,0, hot-dip galvanized	A	2232,–	291,–	2523,–

Extensible Crane Arm Type KT-K	Category	Price	Freight charges	Price including freight charges
KT-K 2,5, painted	A	1291,–	201,–	1492,–

Prices in EUR, valid EXW DE-46354 Südlohn, DE-38820 Halberstadt, unpacked
Freight charges valid CPT Spain, islands and oversea territories excluded

BAUER GmbH
Eichendorffstr. 62
46354 Südlohn, Germany

Tel. +49 2862 70 90
info@bauer-suedlohn.com
www.bauer-suedlohn.com

Geschäftsführer
Patrick Bauer, Pascal Bauer
Amtsgericht Coesfeld HRB 5259

TÜVNORD
TÜV NORD CERT GmbH
DIN EN ISO 9001
tuev-nord.de

Price List 0726 en-ES
Forklift Truck Attachments

Extensible Crane Arm Type KT-K	Category	Price	Freight charges	Price including freight charges
KT-K 2,5, hot-dip galvanized	A	1622,–	201,–	1823,–
KT-K 5,0, painted	A	1625,–	201,–	1826,–
KT-K 5,0, hot-dip galvanized	A	2092,–	201,–	2293,–

Barrow Tipper Type KW-ET	Category	Price	Freight charges	Price including freight charges
KW-ET 250, painted	E	588,–	130,–	718,–
Lid, galvanized	E	136,–	15,–	151,–
KW-ET 250, hot-dip galvanized	E	900,–	130,–	1030,–
Lid, galvanized	E	136,–	15,–	151,–
KW-ET 400, painted	E	648,–	130,–	778,–
Lid, galvanized	E	156,–	16,–	172,–
KW-ET 400, hot-dip galvanized	E	998,–	130,–	1128,–
Lid, galvanized	E	156,–	16,–	172,–
KW-ET 600, painted	E	808,–	201,–	1009,–
Lid, galvanized	E	173,–	20,–	193,–
KW-ET 600, hot-dip galvanized	E	1166,–	201,–	1367,–
Lid, galvanized	E	173,–	20,–	193,–
KW-ET 1000, painted	E	997,–	201,–	1198,–
Lid, galvanized	E	193,–	22,–	215,–
KW-ET 1000, hot-dip galvanized	E	1591,–	201,–	1792,–
Lid, galvanized	E	193,–	22,–	215,–

Loading Arm Type LA	Category	Price	Freight charges	Price including freight charges
LA 1600-1,0, painted	A	542,–	130,–	672,–
LA 1600-1,0, hot-dip galvanized	A	581,–	130,–	711,–
LA 1600-2,5, painted	A	786,–	130,–	916,–
LA 1600-2,5, hot-dip galvanized	A	927,–	130,–	1057,–
LA 1600-5,0, painted	A	1133,–	201,–	1334,–
LA 1600-5,0, hot-dip galvanized	A	1325,–	201,–	1526,–
LA 2400-1,0, painted	A	569,–	130,–	699,–
LA 2400-1,0, hot-dip galvanized	A	632,–	130,–	762,–
LA 2400-2,5, painted	A	877,–	201,–	1078,–
LA 2400-2,5, hot-dip galvanized	A	1017,–	201,–	1218,–
LA 2400-5,0, painted	A	1250,–	201,–	1451,–
LA 2400-5,0, hot-dip galvanized	A	1480,–	201,–	1681,–
LA 25-1,0, painted	A	632,–	130,–	762,–
LA 25-1,0, hot-dip galvanized	A	683,–	130,–	813,–

Loading Arm Type LAT	Category	Price	Freight charges	Price including freight charges
LAT 25-1,0, painted	A	766,–	130,–	896,–
LAT 25-1,0, hot-dip galvanized	A	838,–	130,–	968,–

Scissor Gripper Type LG	Category	Price	Freight charges	Price including freight charges
LG 60, painted	B	245,–	60,–	305,–
LG 60, galvanized	B	223,–	60,–	283,–

Prices in EUR, valid EXW DE-46354 Südlohn, DE-38820 Halberstadt, unpacked
Freight charges valid CPT Spain, islands and oversea territories excluded

BAUER GmbH
Eichendorffstr. 62
46354 Südlohn, Germany

Tel. +49 2862 70 90
info@bauer-suedlohn.com
www.bauer-suedlohn.com

Geschäftsführer
Patrick Bauer, Pascal Bauer
Amtsgericht Coesfeld HRB 5259

TÜVNORD
TÜV NORD CERT GmbH
DIN EN ISO 9001
tuev-nord.de

Price List 0726 en-ES
Forklift Truck Attachments

Scissor Gripper Type LG	Category	Price	Freight charges	Price including freight charges
LG 200, painted	B	245,–	60,–	305,–
LG 200, galvanized	B	223,–	60,–	283,–

Container for Long Material Type LGK	Category	Price	Freight charges	Price including freight charges
LGK, painted	A	1376,–	201,–	1577,–
Castor Set, polyamide, Load capacity 1350 kg / castor set	A	192,–	15,–	207,–
LGK, hot-dip galvanized	A	1676,–	201,–	1877,–
Castor Set, polyamide, Load capacity 1350 kg / castor set	A	192,–	15,–	207,–

Long Material Carrier Type LGT	Category	Price	Freight charges	Price including freight charges
LGT 1,5, painted	A	1929,–	291,–	2220,–
LGT 1,5, hot-dip galvanized	A	2263,–	291,–	2554,–
LGT 2,5, painted	A	2164,–	on request	on request
LGT 2,5, hot-dip galvanized	A	2590,–	on request	on request
LGT 3,5, painted	A	2989,–	on request	on request
LGT 3,5, hot-dip galvanized	A	3670,–	on request	on request
LGT 4,5, painted	A	3302,–	on request	on request
LGT 4,5, hot-dip galvanized	A	4071,–	on request	on request

Drum Claw Type LGZ	Category	Price	Freight charges	Price including freight charges
LGZ 60, painted	B	225,–	60,–	285,–
LGZ 60, galvanized	B	211,–	60,–	271,–
LGZ 200, painted	B	225,–	60,–	285,–
LGZ 200, galvanized	B	211,–	60,–	271,–

Crane Hook Type LH	Category	Price	Freight charges	Price including freight charges
LH-I 1,0, painted	A	199,–	60,–	259,–
LH-I 1,0, hot-dip galvanized	A	223,–	60,–	283,–
LH-I 1,5, painted	A	218,–	60,–	278,–
LH-I 1,5, hot-dip galvanized	A	242,–	60,–	302,–
LH-I 2,0, painted	A	229,–	60,–	289,–
LH-I 2,0, hot-dip galvanized	A	254,–	60,–	314,–
LH-I 2,5, painted	A	255,–	60,–	315,–
LH-I 2,5, hot-dip galvanized	A	279,–	60,–	339,–
LH-I 3,0, painted	A	331,–	60,–	391,–
LH-I 3,0, hot-dip galvanized	A	356,–	60,–	416,–
LH-II 1,5, painted	A	329,–	60,–	389,–
LH-II 1,5, hot-dip galvanized	A	378,–	60,–	438,–
LH-II 2,5, painted	A	434,–	60,–	494,–
LH-II 2,5, hot-dip galvanized	A	516,–	60,–	576,–
LH-II 5,0, painted	A	720,–	130,–	850,–
LH-II 5,0, hot-dip galvanized	A	808,–	130,–	938,–
LH-II 7,5, painted	A	856,–	130,–	986,–
LH-II 7,5, hot-dip galvanized	A	949,–	130,–	1079,–

Prices in EUR, valid EXW DE-46354 Südlohn, DE-38820 Halberstadt, unpacked
Freight charges valid CPT Spain, islands and oversea territories excluded

BAUER GmbH
Eichendorffstr. 62
46354 Südlohn, Germany

Tel. +49 2862 70 90
info@bauer-suedlohn.com
www.bauer-suedlohn.com

Geschäftsführer
Patrick Bauer, Pascal Bauer
Amtsgericht Coesfeld HRB 5259

TÜVNORD
TÜV NORD CERT GmbH
DIN EN ISO 9001
tuev-nord.de

Price List 0726 en-ES
Forklift Truck Attachments

Long Load Handler Type LSL	Category	Price	Freight charges	Price including freight charges
LSL, painted	A	1141,–	201,–	1342,–
LSL, hot-dip galvanized	A	1310,–	201,–	1511,–

Long Material Sidecar Type LSW	Category	Price	Freight charges	Price including freight charges
LSW 1,3, painted	A	953,–	130,–	1083,–
LSW 1,3, hot-dip galvanized	A	1017,–	201,–	1218,–
LSW 2,5, painted	A	1132,–	130,–	1262,–
LSW 2,5, hot-dip galvanized	A	1197,–	201,–	1398,–

Access Safety Platform Type MB-B	Category	Price	Freight charges	Price including freight charges
MB-B, painted	A	1085,–	201,–	1286,–
Castor Set, polyamide, Load capacity 1050 kg / castor set	A	136,–	15,–	151,–

Access Safety Platform Type MB-B/L	Category	Price	Freight charges	Price including freight charges
MB-B/L, painted	A	1274,–	201,–	1475,–
Castor Set, polyamide, Load capacity 1050 kg / castor set	A	136,–	15,–	151,–

Access Safety Platform Type MB-D	Category	Price	Freight charges	Price including freight charges
MB-D, painted	A	908,–	201,–	1109,–
Castor Set, polyamide, Load capacity 1050 kg / castor set	A	136,–	15,–	151,–

Access Safety Platform Type MB-D/L	Category	Price	Freight charges	Price including freight charges
MB-D/L, painted	A	1096,–	201,–	1297,–
Castor Set, polyamide, Load capacity 1050 kg / castor set	A	136,–	15,–	151,–

Access Safety Platform Type MB-F	Category	Price	Freight charges	Price including freight charges
MB-F, painted	A	1074,–	201,–	1275,–
Castor Set, polyamide, Load capacity 1050 kg / castor set	A	136,–	15,–	151,–

Access Safety Platform Type MB-II	Category	Price	Freight charges	Price including freight charges
MB-II, painted	A	994,–	201,–	1195,–
Castor Set, polyamide, Load capacity 1050 kg / castor set	A	136,–	15,–	151,–
MB-II, hot-dip galvanized	A	1171,–	201,–	1372,–
Castor Set, polyamide, Load capacity 1050 kg / castor set	A	136,–	15,–	151,–

Access Safety Platform Type MB-K-IV	Category	Price	Freight charges	Price including freight charges
MB-K-IV, painted	A	2012,–	254,–	2266,–

Access Safety Platform Type MB-ST	Category	Price	Freight charges	Price including freight charges
MB-ST, painted	A	2576,–	201,–	2777,–
Castor Set, polyamide, Load capacity 1050 kg / castor set	A	136,–	15,–	151,–

Access Safety Platform Type MB-ST/L	Category	Price	Freight charges	Price including freight charges
MB-ST/L, painted	A	2764,–	201,–	2965,–

Prices in EUR, valid EXW DE-46354 Südlohn, DE-38820 Halberstadt, unpacked
Freight charges valid CPT Spain, islands and oversea territories excluded

BAUER GmbH
Eichendorffstr. 62
46354 Südlohn, Germany

Tel. +49 2862 70 90
info@bauer-suedlohn.com
www.bauer-suedlohn.com

Geschäftsführer
Patrick Bauer, Pascal Bauer
Amtsgericht Coesfeld HRB 5259

TÜVNORD
TÜV NORD CERT GmbH
DIN EN ISO 9001
tuev-nord.de

Price List 0726 en-ES
Forklift Truck Attachments

Access Safety Platform Type MB-ST/L	Category	Price	Freight charges	Price including freight charges
Castor Set, polyamide, Load capacity 1050 kg / castor set	A	136,–	15,–	151,–

Access Safety Platform Type MB-ST/T	Category	Price	Freight charges	Price including freight charges
MB-ST/T, painted	A	2903,–	201,–	3104,–
Castor Set, polyamide, Load capacity 1050 kg / castor set	A	136,–	15,–	151,–

Access Safety Platform Type MB-ST/T/L	Category	Price	Freight charges	Price including freight charges
MB-ST/T/L, painted	A	3092,–	201,–	3293,–
Castor Set, polyamide, Load capacity 1050 kg / castor set	A	136,–	15,–	151,–

Mini Tilting Container Type MGU	Category	Price	Freight charges	Price including freight charges
MGU 230, painted	A	569,–	130,–	699,–
Lid, galvanized	A	131,–	18,–	149,–
Castor Set, polyamide, Load capacity 1050 kg / castor set	A	156,–	15,–	171,–
Skip Body Welded Oil and Watertight	A	78,–	0,–	78,–
MGU 230, hot-dip galvanized	A	655,–	201,–	856,–
Lid, galvanized	A	131,–	18,–	149,–
Castor Set, polyamide, Load capacity 1050 kg / castor set	A	156,–	15,–	171,–
Skip Body Welded Oil and Watertight	A	78,–	0,–	78,–
MGU 270, painted	A	621,–	201,–	822,–
Lid, galvanized	A	131,–	18,–	149,–
Castor Set, polyamide, Load capacity 1050 kg / castor set	A	156,–	15,–	171,–
Skip Body Welded Oil and Watertight	A	78,–	0,–	78,–
MGU 270, hot-dip galvanized	A	729,–	201,–	930,–
Lid, galvanized	A	131,–	18,–	149,–
Castor Set, polyamide, Load capacity 1050 kg / castor set	A	156,–	15,–	171,–
Skip Body Welded Oil and Watertight	A	78,–	0,–	78,–
MGU 460, painted	A	815,–	201,–	1016,–
Lid, galvanized	A	169,–	22,–	191,–
Castor Set, polyamide, Load capacity 1050 kg / castor set	A	156,–	15,–	171,–
Skip Body Welded Oil and Watertight	A	78,–	0,–	78,–
MGU 460, hot-dip galvanized	A	967,–	201,–	1168,–
Lid, galvanized	A	169,–	22,–	191,–
Castor Set, polyamide, Load capacity 1050 kg / castor set	A	156,–	15,–	171,–
Skip Body Welded Oil and Watertight	A	78,–	0,–	78,–
MGU 610, painted	A	919,–	201,–	1120,–
Lid, galvanized	A	181,–	26,–	207,–
Castor Set, polyamide, Load capacity 1050 kg / castor set	A	156,–	15,–	171,–
Skip Body Welded Oil and Watertight	A	78,–	0,–	78,–
MGU 610, hot-dip galvanized	A	1089,–	201,–	1290,–
Lid, galvanized	A	181,–	26,–	207,–
Castor Set, polyamide, Load capacity 1050 kg / castor set	A	156,–	15,–	171,–
Skip Body Welded Oil and Watertight	A	78,–	0,–	78,–

Prices in EUR, valid EXW DE-46354 Südlohn, DE-38820 Halberstadt, unpacked
Freight charges valid CPT Spain, islands and oversea territories excluded

BAUER GmbH
Eichendorffstr. 62
46354 Südlohn, Germany

Tel. +49 2862 70 90
info@bauer-suedlohn.com
www.bauer-suedlohn.com

Geschäftsführer
Patrick Bauer, Pascal Bauer
Amtsgericht Coesfeld HRB 5259

TÜVNORD
TÜV NORD CERT GmbH
DIN EN ISO 9001
tuev-nord.de

Price List 0726 en-ES
Forklift Truck Attachments

Wheelie Bin Jack Type MH	Category	Price	Freight charges	Price including freight charges
MH-I, painted	A	657,–	130,–	787,–
MH-II, painted	A	725,–	130,–	855,–
MH-III, painted	A	784,–	130,–	914,–

Wheelie Bin Tipper Type MK	Category	Price	Freight charges	Price including freight charges
MK 120, painted	A	1273,–	130,–	1403,–
MK 240, painted	A	1273,–	130,–	1403,–

Wheelie Bin Tipper Type MK-H	Category	Price	Freight charges	Price including freight charges
MK-H 120, painted	A	1902,–	130,–	2032,–
MK-H 240, painted	A	1902,–	201,–	2103,–

Mini Container With Drop Away Base Type MSB	Category	Price	Freight charges	Price including freight charges
MSB 150, painted	A	636,–	130,–	766,–
Castor Set, polyamide, Load capacity 1050 kg / castor set	A	156,–	15,–	171,–
Guiding Plates, galvanized	A	73,–	12,–	85,–
MSB 150, hot-dip galvanized	A	746,–	130,–	876,–
Castor Set, polyamide, Load capacity 1050 kg / castor set	A	156,–	15,–	171,–
Guiding Plates, galvanized	A	73,–	12,–	85,–
MSB 250, painted	A	690,–	130,–	820,–
Castor Set, polyamide, Load capacity 1050 kg / castor set	A	156,–	15,–	171,–
Guiding Plates, galvanized	A	73,–	12,–	85,–
MSB 250, hot-dip galvanized	A	826,–	130,–	956,–
Castor Set, polyamide, Load capacity 1050 kg / castor set	A	156,–	15,–	171,–
Guiding Plates, galvanized	A	73,–	12,–	85,–
MSB 400, painted	A	850,–	130,–	980,–
Castor Set, polyamide, Load capacity 1050 kg / castor set	A	156,–	15,–	171,–
Guiding Plates, galvanized	A	73,–	12,–	85,–
MSB 400, hot-dip galvanized	A	1018,–	201,–	1219,–
Castor Set, polyamide, Load capacity 1050 kg / castor set	A	156,–	15,–	171,–
Guiding Plates, galvanized	A	73,–	12,–	85,–

Tilting Container Type NK	Category	Price	Freight charges	Price including freight charges
NK 30, painted	A	700,–	201,–	901,–
Lid, galvanized	A	98,–	15,–	113,–
Castor Set, polyamide, Load capacity 1350 kg / castor set	A	192,–	15,–	207,–
Skip Body Welded Oil and Watertight	A	78,–	0,–	78,–
NK 30, hot-dip galvanized	A	984,–	201,–	1185,–
Lid, galvanized	A	98,–	15,–	113,–
Castor Set, polyamide, Load capacity 1350 kg / castor set	A	192,–	15,–	207,–
Skip Body Welded Oil and Watertight	A	78,–	0,–	78,–
NK 50, painted	A	984,–	201,–	1185,–
Lid, galvanized	A	98,–	18,–	116,–
Castor Set, polyamide, Load capacity 1350 kg / castor set	A	192,–	15,–	207,–
Skip Body Welded Oil and Watertight	A	78,–	0,–	78,–

Prices in EUR, valid EXW DE-46354 Südlohn, DE-38820 Halberstadt, unpacked
Freight charges valid CPT Spain, islands and oversea territories excluded

BAUER GmbH
Eichendorffstr. 62
46354 Südlohn, Germany

Tel. +49 2862 70 90
info@bauer-suedlohn.com
www.bauer-suedlohn.com

Geschäftsführer
Patrick Bauer, Pascal Bauer
Amtsgericht Coesfeld HRB 5259

TÜVNORD
TÜV NORD CERT GmbH
DIN EN ISO 9001
tuev-nord.de

Price List 0726 en-ES
Forklift Truck Attachments

Tilting Container Type NK	Category	Price	Freight charges	Price including freight charges
NK 50, hot-dip galvanized	A	1327,–	201,–	1528,–
Lid, galvanized	A	98,–	18,–	116,–
Castor Set, polyamide, Load capacity 1350 kg / castor set	A	192,–	15,–	207,–
Skip Body Welded Oil and Watertight	A	78,–	0,–	78,–
NK 75, painted	A	1115,–	291,–	1406,–
Lid, galvanized	A	142,–	22,–	164,–
Castor Set, polyamide, Load capacity 1350 kg / castor set	A	192,–	15,–	207,–
Skip Body Welded Oil and Watertight	A	78,–	0,–	78,–
NK 75, hot-dip galvanized	A	1743,–	291,–	2034,–
Lid, galvanized	A	142,–	22,–	164,–
Castor Set, polyamide, Load capacity 1350 kg / castor set	A	192,–	15,–	207,–
Skip Body Welded Oil and Watertight	A	78,–	0,–	78,–
NK 100, painted	A	1508,–	291,–	1799,–
Lid, galvanized	A	173,–	27,–	200,–
Castor Set, polyamide, Load capacity 1350 kg / castor set	A	192,–	15,–	207,–
Skip Body Welded Oil and Watertight	A	121,–	0,–	121,–
NK 100, hot-dip galvanized	A	2070,–	291,–	2361,–
Lid, galvanized	A	173,–	27,–	200,–
Castor Set, polyamide, Load capacity 1350 kg / castor set	A	192,–	15,–	207,–
Skip Body Welded Oil and Watertight	A	121,–	0,–	121,–

Cylindrical Container Type RB	Category	Price	Freight charges	Price including freight charges
RB 300, painted	A	679,–	130,–	809,–
Lid, aluminium	A	160,–	14,–	174,–
Castor Set, polyamide, Load capacity 1050 kg / castor set	A	156,–	15,–	171,–
RB 450, painted	A	793,–	130,–	923,–
Lid, aluminium	A	160,–	14,–	174,–
Castor Set, polyamide, Load capacity 1050 kg / castor set	A	156,–	15,–	171,–

Tilting Container Type RD	Category	Price	Freight charges	Price including freight charges
RD 750, painted	A	1202,–	291,–	1493,–
Castor Set, polyamide, Load capacity 1350 kg / castor set	A	192,–	15,–	207,–
Skip Body Welded Oil and Watertight	A	78,–	0,–	78,–
RD 750, hot-dip galvanized	A	1602,–	291,–	1893,–
Castor Set, polyamide, Load capacity 1350 kg / castor set	A	192,–	15,–	207,–
Skip Body Welded Oil and Watertight	A	78,–	0,–	78,–
RD 1000, painted	A	1449,–	291,–	1740,–
Castor Set, polyamide, Load capacity 1350 kg / castor set	A	192,–	15,–	207,–
Skip Body Welded Oil and Watertight	A	121,–	0,–	121,–
RD 1000, hot-dip galvanized	A	1933,–	291,–	2224,–
Castor Set, polyamide, Load capacity 1350 kg / castor set	A	192,–	15,–	207,–
Skip Body Welded Oil and Watertight	A	121,–	0,–	121,–

Platform for Off-Cuts Type RGP	Category	Price	Freight charges	Price including freight charges
RGP-1, painted	A	2437,–	on request	on request

Prices in EUR, valid EXW DE-46354 Südlohn, DE-38820 Halberstadt, unpacked
Freight charges valid CPT Spain, islands and oversea territories excluded

BAUER GmbH
Eichendorffstr. 62
46354 Südlohn, Germany

Tel. +49 2862 70 90
info@bauer-suedlohn.com
www.bauer-suedlohn.com

Geschäftsführer
Patrick Bauer, Pascal Bauer
Amtsgericht Coesfeld HRB 5259

TÜVNORD
TÜV NORD CERT GmbH
DIN EN ISO 9001
tuev-nord.de

Price List 0726 en-ES
Forklift Truck Attachments

Platform for Off-Cuts Type RGP	Category	Price	Freight charges	Price including freight charges
RGP-1, hot-dip galvanized	A	3118,–	on request	on request
RGP-2, painted	A	2669,–	on request	on request
RGP-2, hot-dip galvanized	A	3558,–	on request	on request
RGP-3, painted	A	2907,–	on request	on request
RGP-3, hot-dip galvanized	A	3916,–	on request	on request

Shunting Aid Type RH	Category	Price	Freight charges	Price including freight charges
RH, painted	A	426,–	60,–	486,–

Shunting Aid Type RH-AC	Category	Price	Freight charges	Price including freight charges
RH-AC, painted	A	2305,–	291,–	2596,–

Shunting Aid Type RH-RA	Category	Price	Freight charges	Price including freight charges
RH-RA, painted	A	1586,–	130,–	1716,–

Shunting Aid Type RH-RAK	Category	Price	Freight charges	Price including freight charges
RH-RAK, painted	A	1691,–	130,–	1821,–

Shunting Aid Type RH-RM	Category	Price	Freight charges	Price including freight charges
RH-RM, painted	A	1178,–	130,–	1308,–

Shunting Aid Type RH-RMK	Category	Price	Freight charges	Price including freight charges
RH-RMK, painted	A	1285,–	130,–	1415,–

Drum Lifter Type RS 60	Category	Price	Freight charges	Price including freight charges
RS 60-I, painted	B	1013,–	130,–	1143,–
RS 60-I, hot-dip galvanized	B	1076,–	130,–	1206,–
RS 60-II, painted	B	1713,–	130,–	1843,–
RS 60-II, hot-dip galvanized	B	1798,–	130,–	1928,–

Drum Lifter Type RS	Category	Price	Freight charges	Price including freight charges
RS-I/91, painted	B	1701,–	201,–	1902,–
RS-I/91, hot-dip galvanized	B	1945,–	201,–	2146,–
RS-II/91, painted	B	2948,–	201,–	3149,–
RS-II/91, hot-dip galvanized	B	3320,–	201,–	3521,–
RS-I/M, painted	B	1556,–	130,–	1686,–
RS-I/M, hot-dip galvanized	B	1798,–	201,–	1999,–
RS-II/M, painted	B	2663,–	201,–	2864,–
RS-II/M, hot-dip galvanized	B	3030,–	201,–	3231,–

Drum Lifter Type RS/D 91	Category	Price	Freight charges	Price including freight charges
RS-I/D 91, painted	B	1488,–	201,–	1689,–
RS-I/D 91, hot-dip galvanized	B	1730,–	201,–	1931,–
RS-II/D 91, painted	B	2521,–	201,–	2722,–

Prices in EUR, valid EXW DE-46354 Südlohn, DE-38820 Halberstadt, unpacked
Freight charges valid CPT Spain, islands and oversea territories excluded

BAUER GmbH
Eichendorffstr. 62
46354 Südlohn, Germany

Tel. +49 2862 70 90
info@bauer-suedlohn.com
www.bauer-suedlohn.com

Geschäftsführer
Patrick Bauer, Pascal Bauer
Amtsgericht Coesfeld HRB 5259

TÜVNORD
TÜV NORD CERT GmbH
DIN EN ISO 9001
tuev-nord.de

Price List 0726 en-ES
Forklift Truck Attachments

Drum Lifter Type RS/D 91	Category	Price	Freight charges	Price including freight charges
RS-II/D 91, hot-dip galvanized	B	2887,–	201,–	3088,–

Swarf Tilting Container Type S3S	Category	Price	Freight charges	Price including freight charges
S3S 300, painted	A	1357,–	201,–	1558,–
Lid, galvanized	A	174,–	18,–	192,–
Castor Set, polyamide, Load capacity 1050 kg / castor set	A	136,–	15,–	151,–
S3S 300, hot-dip galvanized	A	1454,–	291,–	1745,–
Lid, galvanized	A	174,–	18,–	192,–
Castor Set, polyamide, Load capacity 1050 kg / castor set	A	136,–	15,–	151,–
S3S 600, painted	A	1413,–	291,–	1704,–
Lid, galvanized	A	196,–	22,–	218,–
Castor Set, polyamide, Load capacity 1050 kg / castor set	A	136,–	15,–	151,–
S3S 600, hot-dip galvanized	A	1514,–	291,–	1805,–
Lid, galvanized	A	196,–	22,–	218,–
Castor Set, polyamide, Load capacity 1050 kg / castor set	A	136,–	15,–	151,–

Swarf Tilting Container Type S4A	Category	Price	Freight charges	Price including freight charges
S4A 600, painted	A	1271,–	201,–	1472,–
Lid, galvanized	A	196,–	22,–	218,–
S4A 600, hot-dip galvanized	A	1418,–	201,–	1619,–
Lid, galvanized	A	196,–	22,–	218,–
S4A 900, painted	A	1408,–	291,–	1699,–
Lid, galvanized	A	223,–	27,–	250,–
S4A 900, hot-dip galvanized	A	1595,–	291,–	1886,–
Lid, galvanized	A	223,–	27,–	250,–
S4A 1200, painted	A	1497,–	291,–	1788,–
Lid, galvanized	A	223,–	26,–	249,–
S4A 1200, hot-dip galvanized	A	1730,–	291,–	2021,–
Lid, galvanized	A	223,–	26,–	249,–

Container With Drop Away Base Type SB	Category	Price	Freight charges	Price including freight charges
SB 500, painted	B	1000,–	201,–	1201,–
Lid, galvanized	B	143,–	16,–	159,–
Castor Set, polyamide, Load capacity 1350 kg / castor set	A	192,–	15,–	207,–
Heavy-duty Castor Set, polyamide, Load capacity 2550 kg / castor set	A	379,–	15,–	394,–
SB 500, hot-dip galvanized	B	1303,–	201,–	1504,–
Lid, galvanized	B	143,–	16,–	159,–
Castor Set, polyamide, Load capacity 1350 kg / castor set	A	192,–	15,–	207,–
Heavy-duty Castor Set, polyamide, Load capacity 2550 kg / castor set	A	379,–	15,–	394,–
SB 750, painted	B	1094,–	201,–	1295,–
Lid, galvanized	B	143,–	16,–	159,–
Castor Set, polyamide, Load capacity 1350 kg / castor set	A	192,–	15,–	207,–
Heavy-duty Castor Set, polyamide, Load capacity 2550 kg / castor set	A	379,–	15,–	394,–
SB 750, hot-dip galvanized	B	1520,–	291,–	1811,–
Lid, galvanized	B	143,–	16,–	159,–

Prices in EUR, valid EXW DE-46354 Südlohn, DE-38820 Halberstadt, unpacked
Freight charges valid CPT Spain, islands and oversea territories excluded

BAUER GmbH
Eichendorffstr. 62
46354 Südlohn, Germany

Tel. +49 2862 70 90
info@bauer-suedlohn.com
www.bauer-suedlohn.com

Geschäftsführer
Patrick Bauer, Pascal Bauer
Amtsgericht Coesfeld HRB 5259

TÜVNORD
TÜV NORD CERT GmbH
DIN EN ISO 9001
tuev-nord.de

Price List 0726 en-ES
Forklift Truck Attachments

Container With Drop Away Base Type SB	Category	Price	Freight charges	Price including freight charges
Castor Set, polyamide, Load capacity 1350 kg / castor set	A	192,–	15,–	207,–
Heavy-duty Castor Set, polyamide, Load capacity 2550 kg / castor set	A	379,–	15,–	394,–
SB 1000, painted	B	1295,–	291,–	1586,–
Lid, galvanized	B	143,–	16,–	159,–
Castor Set, polyamide, Load capacity 1350 kg / castor set	A	192,–	15,–	207,–
Heavy-duty Castor Set, polyamide, Load capacity 2550 kg / castor set	A	379,–	15,–	394,–
SB 1000, hot-dip galvanized	B	1801,–	291,–	2092,–
Lid, galvanized	B	143,–	16,–	159,–
Castor Set, polyamide, Load capacity 1350 kg / castor set	A	192,–	15,–	207,–
Heavy-duty Castor Set, polyamide, Load capacity 2550 kg / castor set	A	379,–	15,–	394,–
SB 1500, painted	B	1755,–	291,–	2046,–
Lid, galvanized	B	254,–	21,–	275,–
Castor Set, polyamide, Load capacity 1350 kg / castor set	A	192,–	15,–	207,–
Heavy-duty Castor Set, polyamide, Load capacity 2550 kg / castor set	A	379,–	15,–	394,–
SB 1500, hot-dip galvanized	B	2443,–	357,–	2800,–
Lid, galvanized	B	254,–	21,–	275,–
Castor Set, polyamide, Load capacity 1350 kg / castor set	A	192,–	15,–	207,–
Heavy-duty Castor Set, polyamide, Load capacity 2550 kg / castor set	A	379,–	15,–	394,–
SB 2000, painted	B	1803,–	357,–	2160,–
Lid, galvanized	B	254,–	21,–	275,–
Castor Set, polyamide, Load capacity 1350 kg / castor set	A	192,–	15,–	207,–
Heavy-duty Castor Set, polyamide, Load capacity 2550 kg / castor set	A	379,–	15,–	394,–
SB 2000, hot-dip galvanized	B	2581,–	357,–	2938,–
Lid, galvanized	B	254,–	21,–	275,–
Castor Set, polyamide, Load capacity 1350 kg / castor set	A	192,–	15,–	207,–
Heavy-duty Castor Set, polyamide, Load capacity 2550 kg / castor set	A	379,–	15,–	394,–

Collecting System Type SBS	Category	Price	Freight charges	Price including freight charges
SBS 500, painted	C	399,–	201,–	600,–
Trolley TW 500, hot-dip galvanized	C	258,–	130,–	388,–
SBS 500, hot-dip galvanized	C	472,–	201,–	673,–
Trolley TW 500, hot-dip galvanized	C	258,–	130,–	388,–
SBS 1000, painted	C	509,–	201,–	710,–
Trolley TW 1000, hot-dip galvanized	C	297,–	130,–	427,–
SBS 1000, hot-dip galvanized	C	626,–	201,–	827,–
Trolley TW 1000, hot-dip galvanized	C	297,–	130,–	427,–
SBS 2000, painted	C	807,–	344,–	1151,–
Trolley TW 2000, hot-dip galvanized	C	505,–	130,–	635,–
SBS 2000, hot-dip galvanized	C	968,–	344,–	1312,–
Trolley TW 2000, hot-dip galvanized	C	505,–	130,–	635,–

Filling Hopper Type SBT	Category	Price	Freight charges	Price including freight charges
SBT, painted	A	1671,–	291,–	1962,–

Prices in EUR, valid EXW DE-46354 Südlohn, DE-38820 Halberstadt, unpacked
Freight charges valid CPT Spain, islands and oversea territories excluded

BAUER GmbH
Eichendorffstr. 62
46354 Südlohn, Germany

Tel. +49 2862 70 90
info@bauer-suedlohn.com
www.bauer-suedlohn.com

Geschäftsführer
Patrick Bauer, Pascal Bauer
Amtsgericht Coesfeld HRB 5259

TÜVNORD
TÜV NORD CERT GmbH
DIN EN ISO 9001
tuev-nord.de

Price List 0726 en-ES
Forklift Truck Attachments

Snowdozer Type SCH-F	Category	Price	Freight charges	Price including freight charges
SCH-F 150, painted	A	2233,–	291,–	2524,–
SCH-F 180, painted	A	2507,–	291,–	2798,–
SCH-F 210, painted	A	2818,–	291,–	3109,–
SCH-F 240, painted	A	3095,–	410,–	3505,–

Snowdozer Type SCH-G	Category	Price	Freight charges	Price including freight charges
SCH-G 150, painted	A	1584,–	201,–	1785,–
SCH-G 180, painted	A	1730,–	201,–	1931,–
SCH-G 210, painted	A	1998,–	291,–	2289,–
SCH-G 240, painted	A	2160,–	344,–	2504,–

Snowdozer Type SCH-L	Category	Price	Freight charges	Price including freight charges
SCH-L 1500, painted	A	1182,–	201,–	1383,–
SCH-L 1500, hot-dip galvanized	A	1310,–	201,–	1511,–
SCH-L 1800, painted	A	1380,–	201,–	1581,–
SCH-L 1800, hot-dip galvanized	A	1532,–	201,–	1733,–

Snow Plough Type SCH-P-G	Category	Price	Freight charges	Price including freight charges
SCH-P-G 150, painted	A	2493,–	291,–	2784,–
SCH-P-G 180, painted	A	2677,–	291,–	2968,–
SCH-P-G 210, painted	A	2870,–	291,–	3161,–
SCH-P-G 240, painted	A	3408,–	344,–	3752,–

Snow Plough Type SCH-P-S	Category	Price	Freight charges	Price including freight charges
SCH-P-S 150, painted	A	2318,–	291,–	2609,–
SCH-P-S 180, painted	A	2476,–	291,–	2767,–
SCH-P-S 210, painted	A	2629,–	291,–	2920,–
SCH-P-S 240, painted	A	3128,–	344,–	3472,–

Snow Plough Type SCH-P-V	Category	Price	Freight charges	Price including freight charges
SCH-P-V 150, painted	A	2681,–	291,–	2972,–
SCH-P-V 180, painted	A	2949,–	291,–	3240,–
SCH-P-V 210, painted	A	3200,–	291,–	3491,–
SCH-P-V 240, painted	A	3741,–	344,–	4085,–

Snowdozer Type SCH-S	Category	Price	Freight charges	Price including freight charges
SCH-S 150, painted	A	1407,–	201,–	1608,–
SCH-S 180, painted	A	1528,–	201,–	1729,–
SCH-S 210, painted	A	1760,–	291,–	2051,–
SCH-S 240, painted	A	1880,–	344,–	2224,–

Snow Plough Type SCH-U-G	Category	Price	Freight charges	Price including freight charges
SCH-U-G 150, painted	A	2493,–	291,–	2784,–
SCH-U-G 180, painted	A	2677,–	291,–	2968,–

Prices in EUR, valid EXW DE-46354 Südlohn, DE-38820 Halberstadt, unpacked
Freight charges valid CPT Spain, islands and oversea territories excluded

BAUER GmbH
Eichendorffstr. 62
46354 Südlohn, Germany

Tel. +49 2862 70 90
info@bauer-suedlohn.com
www.bauer-suedlohn.com

Geschäftsführer
Patrick Bauer, Pascal Bauer
Amtsgericht Coesfeld HRB 5259

TÜVNORD
TÜV NORD CERT GmbH
DIN EN ISO 9001
tuev-nord.de

Price List 0726 en-ES
Forklift Truck Attachments

Snow Plough Type SCH-U-G	Category	Price	Freight charges	Price including freight charges
SCH-U-G 210, painted	A	2870,–	291,–	3161,–
SCH-U-G 240, painted	A	3408,–	344,–	3752,–

Snow Plough Type SCH-U-S	Category	Price	Freight charges	Price including freight charges
SCH-U-S 150, painted	A	2318,–	291,–	2609,–
SCH-U-S 180, painted	A	2476,–	291,–	2767,–
SCH-U-S 210, painted	A	2629,–	291,–	2920,–
SCH-U-S 240, painted	A	3128,–	344,–	3472,–

Snow Plough Type SCH-U-V	Category	Price	Freight charges	Price including freight charges
SCH-U-V 150, painted	A	2681,–	291,–	2972,–
SCH-U-V 180, painted	A	2949,–	291,–	3240,–
SCH-U-V 210, painted	A	3200,–	291,–	3491,–
SCH-U-V 240, painted	A	3741,–	344,–	4085,–

Snowdozer Type SCH-V	Category	Price	Freight charges	Price including freight charges
SCH-V 150, painted	A	1769,–	201,–	1970,–
SCH-V 180, painted	A	1991,–	201,–	2192,–
SCH-V 210, painted	A	2331,–	291,–	2622,–
SCH-V 240, painted	A	2492,–	344,–	2836,–

Silo Container Type SG	Category	Price	Freight charges	Price including freight charges
SG 375, painted	E	1014,–	201,–	1215,–
Lid, galvanized	E	131,–	28,–	159,–
SG 375, hot-dip galvanized	E	1760,–	201,–	1961,–
Lid, galvanized	E	131,–	28,–	159,–
SG 600, painted	E	1209,–	201,–	1410,–
Lid, galvanized	E	131,–	28,–	159,–
SG 600, hot-dip galvanized	E	1951,–	201,–	2152,–
Lid, galvanized	E	131,–	28,–	159,–

Silo Container Type SG-D	Category	Price	Freight charges	Price including freight charges
SG-D 375, painted	E	1014,–	130,–	1144,–
Lid, galvanized	E	131,–	28,–	159,–
SG-D 375, hot-dip galvanized	E	1760,–	201,–	1961,–
Lid, galvanized	E	131,–	28,–	159,–
SG-D 600, painted	E	1209,–	201,–	1410,–
Lid, galvanized	E	131,–	28,–	159,–
SG-D 600, hot-dip galvanized	E	1951,–	201,–	2152,–
Lid, galvanized	E	131,–	28,–	159,–

Silo Container Type SGK	Category	Price	Freight charges	Price including freight charges
SGK 50, painted	A	1115,–	201,–	1316,–
SGK 50, hot-dip galvanized	A	1142,–	201,–	1343,–
SGK 75, painted	A	1214,–	201,–	1415,–

Prices in EUR, valid EXW DE-46354 Südlohn, DE-38820 Halberstadt, unpacked
Freight charges valid CPT Spain, islands and oversea territories excluded

BAUER GmbH
Eichendorffstr. 62
46354 Südlohn, Germany

Tel. +49 2862 70 90
info@bauer-suedlohn.com
www.bauer-suedlohn.com

Geschäftsführer
Patrick Bauer, Pascal Bauer
Amtsgericht Coesfeld HRB 5259

TÜVNORD
TÜV NORD CERT GmbH
DIN EN ISO 9001
tuev-nord.de

Price List 0726 en-ES
Forklift Truck Attachments

Silo Container Type SGK	Category	Price	Freight charges	Price including freight charges
SGK 75, hot-dip galvanized	A	1251,–	201,–	1452,–
SGK 100, painted	A	1327,–	201,–	1528,–
SGK 100, hot-dip galvanized	A	1367,–	201,–	1568,–

Silo Container Type SGS	Category	Price	Freight charges	Price including freight charges
SGS 50, painted	A	885,–	130,–	1015,–
SGS 50, hot-dip galvanized	A	902,–	201,–	1103,–
SGS 75, painted	A	982,–	201,–	1183,–
SGS 75, hot-dip galvanized	A	1015,–	201,–	1216,–
SGS 100, painted	A	1078,–	201,–	1279,–
SGS 100, hot-dip galvanized	A	1110,–	201,–	1311,–

Swarf Tilting Container Type SGU	Category	Price	Freight charges	Price including freight charges
SGU 30, painted	A	940,–	201,–	1141,–
Lid, galvanized	A	98,–	18,–	116,–
Castor Set, polyamide, Load capacity 1350 kg / castor set	A	192,–	15,–	207,–
Crane lifting eyes for use with a crane	A	106,–	8,–	114,–
Support legs, 100 mm ground leeway	A	70,–	8,–	78,–
SGU 30, hot-dip galvanized	A	1117,–	201,–	1318,–
Lid, galvanized	A	98,–	18,–	116,–
Castor Set, polyamide, Load capacity 1350 kg / castor set	A	192,–	15,–	207,–
Crane lifting eyes for use with a crane	A	106,–	8,–	114,–
Support legs, 100 mm ground leeway	A	70,–	8,–	78,–
SGU 50, painted	A	1163,–	201,–	1364,–
Lid, galvanized	A	98,–	18,–	116,–
Castor Set, polyamide, Load capacity 1350 kg / castor set	A	192,–	15,–	207,–
Adjustable dumping brake	A	464,–	10,–	474,–
Crane lifting eyes for use with a crane	A	106,–	8,–	114,–
Support legs, 100 mm ground leeway	A	70,–	8,–	78,–
SGU 50, hot-dip galvanized	A	1407,–	201,–	1608,–
Lid, galvanized	A	98,–	18,–	116,–
Castor Set, polyamide, Load capacity 1350 kg / castor set	A	192,–	15,–	207,–
Adjustable dumping brake	A	464,–	10,–	474,–
Crane lifting eyes for use with a crane	A	106,–	8,–	114,–
Support legs, 100 mm ground leeway	A	70,–	8,–	78,–
SGU 75, painted	A	1312,–	201,–	1513,–
Lid, galvanized	A	139,–	26,–	165,–
Castor Set, polyamide, Load capacity 1350 kg / castor set	A	192,–	15,–	207,–
Adjustable dumping brake	A	464,–	10,–	474,–
Crane lifting eyes for use with a crane	A	106,–	8,–	114,–
Support legs, 100 mm ground leeway	A	70,–	8,–	78,–
SGU 75, hot-dip galvanized	A	1623,–	201,–	1824,–
Lid, galvanized	A	139,–	26,–	165,–
Castor Set, polyamide, Load capacity 1350 kg / castor set	A	192,–	15,–	207,–
Adjustable dumping brake	A	464,–	10,–	474,–

Prices in EUR, valid EXW DE-46354 Südlohn, DE-38820 Halberstadt, unpacked
Freight charges valid CPT Spain, islands and oversea territories excluded

BAUER GmbH
Eichendorffstr. 62
46354 Südlohn, Germany

Tel. +49 2862 70 90
info@bauer-suedlohn.com
www.bauer-suedlohn.com

Geschäftsführer
Patrick Bauer, Pascal Bauer
Amtsgericht Coesfeld HRB 5259

TÜVNORD
TÜV NORD CERT GmbH
DIN EN ISO 9001
tuev-nord.de

Price List 0726 en-ES
Forklift Truck Attachments

Swarf Tilting Container Type SGU	Category	Price	Freight charges	Price including freight charges
Crane lifting eyes for use with a crane	A	106,–	8,–	114,–
Support legs, 100 mm ground leeway	A	70,–	8,–	78,–
SGU 100, painted	A	1571,–	291,–	1862,–
Lid, galvanized	A	192,–	27,–	219,–
Castor Set, polyamide, Load capacity 1350 kg / castor set	A	192,–	15,–	207,–
Adjustable dumping brake	A	464,–	10,–	474,–
Crane lifting eyes for use with a crane	A	106,–	8,–	114,–
Support legs, 100 mm ground leeway	A	70,–	8,–	78,–
SGU 100, hot-dip galvanized	A	2120,–	291,–	2411,–
Lid, galvanized	A	192,–	27,–	219,–
Castor Set, polyamide, Load capacity 1350 kg / castor set	A	192,–	15,–	207,–
Adjustable dumping brake	A	464,–	10,–	474,–
Crane lifting eyes for use with a crane	A	106,–	8,–	114,–
Support legs, 100 mm ground leeway	A	70,–	8,–	78,–
SGU 150, painted	A	1764,–	291,–	2055,–
Lid, galvanized	A	192,–	27,–	219,–
Castor Set, polyamide, Load capacity 1350 kg / castor set	A	192,–	15,–	207,–
Adjustable dumping brake	A	464,–	10,–	474,–
Crane lifting eyes for use with a crane	A	106,–	8,–	114,–
Support legs, 100 mm ground leeway	A	70,–	8,–	78,–
SGU 150, hot-dip galvanized	A	2242,–	291,–	2533,–
Lid, galvanized	A	192,–	27,–	219,–
Castor Set, polyamide, Load capacity 1350 kg / castor set	A	192,–	15,–	207,–
Adjustable dumping brake	A	464,–	10,–	474,–
Crane lifting eyes for use with a crane	A	106,–	8,–	114,–
Support legs, 100 mm ground leeway	A	70,–	8,–	78,–
SGU 200, painted	A	2215,–	357,–	2572,–
Lid, galvanized	A	226,–	32,–	258,–
Castor Set, polyamide, Load capacity 1350 kg / castor set	A	192,–	15,–	207,–
Adjustable dumping brake	A	464,–	10,–	474,–
Crane lifting eyes for use with a crane	A	106,–	8,–	114,–
Support legs, 100 mm ground leeway	A	70,–	8,–	78,–
SGU 200, hot-dip galvanized	A	2779,–	357,–	3136,–
Castor Set, polyamide, Load capacity 1350 kg / castor set	A	192,–	15,–	207,–
Lid, galvanized	A	226,–	32,–	258,–
Adjustable dumping brake	A	464,–	10,–	474,–
Crane lifting eyes for use with a crane	A	106,–	8,–	114,–
Support legs, 100 mm ground leeway	A	70,–	8,–	78,–

Swarf Tilting Container Type SGU-RZ	Category	Price	Freight charges	Price including freight charges
SGU-RZ 30, painted	A	972,–	201,–	1173,–
Lid, galvanized	A	95,–	18,–	113,–
SGU-RZ 30, hot-dip galvanized	A	1097,–	201,–	1298,–
Lid, galvanized	A	95,–	18,–	113,–
SGU-RZ 55, painted	A	1202,–	201,–	1403,–
Lid, galvanized	A	95,–	18,–	113,–

Prices in EUR, valid EXW DE-46354 Südlohn, DE-38820 Halberstadt, unpacked
Freight charges valid CPT Spain, islands and oversea territories excluded

BAUER GmbH
Eichendorffstr. 62
46354 Südlohn, Germany

Tel. +49 2862 70 90
info@bauer-suedlohn.com
www.bauer-suedlohn.com

Geschäftsführer
Patrick Bauer, Pascal Bauer
Amtsgericht Coesfeld HRB 5259

TÜVNORD
TÜV NORD CERT GmbH
DIN EN ISO 9001
tuev-nord.de

Price List 0726 en-ES
Forklift Truck Attachments

Swarf Tilting Container Type SGU-RZ	Category	Price	Freight charges	Price including freight charges
SGU-RZ 55, hot-dip galvanized	A	1314,–	201,–	1515,–
Lid, galvanized	A	95,–	18,–	113,–

Gritter Type SH	Category	Price	Freight charges	Price including freight charges
SH, painted	A	3569,–	201,–	3770,–
Tarpaulin	A	122,–	10,–	132,–

Forklift Safety Cage Type SIKO	Category	Price	Freight charges	Price including freight charges
SIKO, painted	A	726,–	201,–	927,–
Castor Set, polyamide, Load capacity 1050 kg / castor set	A	136,–	15,–	151,–

Forklift Safety Cage Type SIKO/L	Category	Price	Freight charges	Price including freight charges
SIKO/L, painted	A	878,–	201,–	1079,–
Castor Set, polyamide, Load capacity 1050 kg / castor set	A	136,–	15,–	151,–

Forklift Safety Cage Type SIKO-G	Category	Price	Freight charges	Price including freight charges
SIKO-G, painted	A	657,–	130,–	787,–

Forklift Safety Cage Type SIKO-M	Category	Price	Freight charges	Price including freight charges
SIKO-M, painted	A	529,–	130,–	659,–

Heavy Duty Tilting Container Type SK	Category	Price	Freight charges	Price including freight charges
SK 300, painted	A	1281,–	291,–	1572,–
Lid, galvanized	A	174,–	18,–	192,–
Heavy-duty Castor Set, polyamide, Load capacity 2550 kg / castor set	A	379,–	15,–	394,–
Skip Body Welded Oil and Watertight	A	78,–	0,–	78,–
SK 300, hot-dip galvanized	A	1555,–	291,–	1846,–
Lid, galvanized	A	174,–	18,–	192,–
Heavy-duty Castor Set, polyamide, Load capacity 2550 kg / castor set	A	379,–	15,–	394,–
Skip Body Welded Oil and Watertight	A	78,–	0,–	78,–
SK 600, painted	A	1386,–	291,–	1677,–
Lid, galvanized	A	196,–	22,–	218,–
Heavy-duty Castor Set, polyamide, Load capacity 2550 kg / castor set	A	379,–	15,–	394,–
Skip Body Welded Oil and Watertight	A	78,–	0,–	78,–
SK 600, hot-dip galvanized	A	1724,–	357,–	2081,–
Lid, galvanized	A	196,–	22,–	218,–
Heavy-duty Castor Set, polyamide, Load capacity 2550 kg / castor set	A	379,–	15,–	394,–
Skip Body Welded Oil and Watertight	A	78,–	0,–	78,–
SK 900, painted	A	1510,–	357,–	1867,–
Lid, galvanized	A	223,–	27,–	250,–
Heavy-duty Castor Set, polyamide, Load capacity 2550 kg / castor set	A	379,–	15,–	394,–
Skip Body Welded Oil and Watertight	A	78,–	0,–	78,–
SK 900, hot-dip galvanized	A	1941,–	357,–	2298,–
Lid, galvanized	A	223,–	27,–	250,–
Heavy-duty Castor Set, polyamide, Load capacity 2550 kg / castor set	A	379,–	15,–	394,–

Prices in EUR, valid EXW DE-46354 Südlohn, DE-38820 Halberstadt, unpacked
Freight charges valid CPT Spain, islands and oversea territories excluded

BAUER GmbH
Eichendorffstr. 62
46354 Südlohn, Germany

Tel. +49 2862 70 90
info@bauer-suedlohn.com
www.bauer-suedlohn.com

Geschäftsführer
Patrick Bauer, Pascal Bauer
Amtsgericht Coesfeld HRB 5259

TÜVNORD
TÜV NORD CERT GmbH
DIN EN ISO 9001
tuev-nord.de

Price List 0726 en-ES
Forklift Truck Attachments

Heavy Duty Tilting Container Type SK	Category	Price	Freight charges	Price including freight charges
Skip Body Welded Oil and Watertight	A	78,–	0,–	78,–
SK 1200, painted	A	1770,–	357,–	2127,–
Lid, galvanized	A	223,–	26,–	249,–
Heavy-duty Castor Set, polyamide, Load capacity 2550 kg / castor set	A	379,–	15,–	394,–
Skip Body Welded Oil and Watertight	A	121,–	0,–	121,–
SK 1200, hot-dip galvanized	A	2277,–	500,–	2777,–
Lid, galvanized	A	223,–	26,–	249,–
Heavy-duty Castor Set, polyamide, Load capacity 2550 kg / castor set	A	379,–	15,–	394,–
Skip Body Welded Oil and Watertight	A	121,–	0,–	121,–
SK 1700, painted	A	1862,–	500,–	2362,–
Lid, galvanized	A	276,–	33,–	309,–
Heavy-duty Castor Set, polyamide, Load capacity 2550 kg / castor set	A	379,–	15,–	394,–
Skip Body Welded Oil and Watertight	A	121,–	0,–	121,–
SK 1700, hot-dip galvanized	A	2492,–	500,–	2992,–
Lid, galvanized	A	276,–	33,–	309,–
Heavy-duty Castor Set, polyamide, Load capacity 2550 kg / castor set	A	379,–	15,–	394,–
Skip Body Welded Oil and Watertight	A	121,–	0,–	121,–
SK 2100, painted	A	2032,–	500,–	2532,–
Lid, galvanized	A	360,–	36,–	396,–
Heavy-duty Castor Set, polyamide, Load capacity 2550 kg / castor set	A	379,–	15,–	394,–
Skip Body Welded Oil and Watertight	A	121,–	0,–	121,–
SK 2100, hot-dip galvanized	A	2739,–	500,–	3239,–
Lid, galvanized	A	360,–	36,–	396,–
Heavy-duty Castor Set, polyamide, Load capacity 2550 kg / castor set	A	379,–	15,–	394,–
Skip Body Welded Oil and Watertight	A	121,–	0,–	121,–

Broom Type SKB	Category	Price	Freight charges	Price including freight charges
SKB 100, painted	A	958,–	130,–	1088,–
SKB 150, painted	A	1197,–	130,–	1327,–
SKB 200, painted	A	1475,–	130,–	1605,–

Broom Type SKB-O	Category	Price	Freight charges	Price including freight charges
SKB-O 100, painted	A	658,–	130,–	788,–
SKB-O 150, painted	A	898,–	130,–	1028,–
SKB-O 200, painted	A	1176,–	130,–	1306,–

Swarf Tipping Skip Type SKK	Category	Price	Freight charges	Price including freight charges
SKK 250, painted	E	534,–	130,–	664,–
Lid, galvanized	E	136,–	15,–	151,–
Castor Set, polyamide, Load capacity 1050 kg / castor set	A	136,–	15,–	151,–
Castor Set, solid rubber, Load capacity 615 kg / castor set	E	103,–	15,–	118,–
SKK 250, hot-dip galvanized	E	583,–	130,–	713,–
Lid, galvanized	E	136,–	15,–	151,–
Castor Set, polyamide, Load capacity 1050 kg / castor set	A	136,–	15,–	151,–
Castor Set, solid rubber, Load capacity 615 kg / castor set	E	103,–	15,–	118,–

Prices in EUR, valid EXW DE-46354 Südlohn, DE-38820 Halberstadt, unpacked
Freight charges valid CPT Spain, islands and oversea territories excluded

BAUER GmbH
Eichendorffstr. 62
46354 Südlohn, Germany

Tel. +49 2862 70 90
info@bauer-suedlohn.com
www.bauer-suedlohn.com

Geschäftsführer
Patrick Bauer, Pascal Bauer
Amtsgericht Coesfeld HRB 5259

TÜVNORD
TÜV NORD CERT GmbH
DIN EN ISO 9001
tuev-nord.de

Price List 0726 en-ES
Forklift Truck Attachments

Swarf Tipping Skip Type SKK	Category	Price	Freight charges	Price including freight charges
SKK 400, painted	E	600,–	130,–	730,–
Lid, galvanized	E	156,–	16,–	172,–
Castor Set, polyamide, Load capacity 1050 kg / castor set	A	136,–	15,–	151,–
Castor Set, solid rubber, Load capacity 615 kg / castor set	E	103,–	15,–	118,–
SKK 400, hot-dip galvanized	E	649,–	130,–	779,–
Lid, galvanized	E	156,–	16,–	172,–
Castor Set, polyamide, Load capacity 1050 kg / castor set	A	136,–	15,–	151,–
Castor Set, solid rubber, Load capacity 615 kg / castor set	E	103,–	15,–	118,–
SKK 600, painted	E	815,–	201,–	1016,–
Lid, galvanized	E	173,–	20,–	193,–
Castor Set, polyamide, Load capacity 1050 kg / castor set	A	136,–	15,–	151,–
Castor Set, solid rubber, Load capacity 615 kg / castor set	E	103,–	15,–	118,–
SKK 600, hot-dip galvanized	E	914,–	201,–	1115,–
Lid, galvanized	E	173,–	20,–	193,–
Castor Set, polyamide, Load capacity 1050 kg / castor set	A	136,–	15,–	151,–
Castor Set, solid rubber, Load capacity 615 kg / castor set	E	103,–	15,–	118,–
SKK 800, painted	E	872,–	201,–	1073,–
Lid, galvanized	E	181,–	21,–	202,–
Castor Set, polyamide, Load capacity 1050 kg / castor set	A	136,–	15,–	151,–
Castor Set, solid rubber, Load capacity 615 kg / castor set	E	103,–	15,–	118,–
SKK 800, hot-dip galvanized	E	980,–	201,–	1181,–
Lid, galvanized	E	181,–	21,–	202,–
Castor Set, polyamide, Load capacity 1050 kg / castor set	A	136,–	15,–	151,–
Castor Set, solid rubber, Load capacity 615 kg / castor set	E	103,–	15,–	118,–
SKK 1000, painted	E	930,–	201,–	1131,–
Lid, galvanized	E	193,–	22,–	215,–
Castor Set, polyamide, Load capacity 1050 kg / castor set	A	136,–	15,–	151,–
Castor Set, solid rubber, Load capacity 615 kg / castor set	E	103,–	15,–	118,–
SKK 1000, hot-dip galvanized	E	1063,–	201,–	1264,–
Lid, galvanized	E	193,–	22,–	215,–
Castor Set, polyamide, Load capacity 1050 kg / castor set	A	136,–	15,–	151,–
Castor Set, solid rubber, Load capacity 615 kg / castor set	E	103,–	15,–	118,–

Swarf Tilting Container Type SKM	Category	Price	Freight charges	Price including freight charges
SKM 30, painted	A	950,–	201,–	1151,–
Lid, galvanized	A	104,–	18,–	122,–
SKM 30, hot-dip galvanized	A	1148,–	201,–	1349,–
Lid, galvanized	A	104,–	18,–	122,–
SKM 50, painted	A	1220,–	201,–	1421,–
Lid, galvanized	A	158,–	28,–	186,–
SKM 50, hot-dip galvanized	A	1478,–	201,–	1679,–
Lid, galvanized	A	158,–	28,–	186,–
SKM 75, painted	A	1469,–	201,–	1670,–
Lid, galvanized	A	175,–	33,–	208,–
SKM 75, hot-dip galvanized	A	1790,–	291,–	2081,–
Lid, galvanized	A	175,–	33,–	208,–

Prices in EUR, valid EXW DE-46354 Südlohn, DE-38820 Halberstadt, unpacked
Freight charges valid CPT Spain, islands and oversea territories excluded

BAUER GmbH
Eichendorffstr. 62
46354 Südlohn, Germany

Tel. +49 2862 70 90
info@bauer-suedlohn.com
www.bauer-suedlohn.com

Geschäftsführer
Patrick Bauer, Pascal Bauer
Amtsgericht Coesfeld HRB 5259

TÜVNORD
TÜV NORD CERT GmbH
DIN EN ISO 9001
tuev-nord.de

Price List 0726 en-ES
Forklift Truck Attachments

Swarf Tipping Skip Type SKN	Category	Price	Freight charges	Price including freight charges
SKN 250, painted	E	534,–	130,–	664,–
Lid, galvanized	E	136,–	15,–	151,–
Castor Set, polyamide, Load capacity 1050 kg / castor set	A	136,–	15,–	151,–
Castor Set, solid rubber, Load capacity 615 kg / castor set	E	103,–	15,–	118,–
SKN 250, hot-dip galvanized	E	583,–	130,–	713,–
Lid, galvanized	E	136,–	15,–	151,–
Castor Set, polyamide, Load capacity 1050 kg / castor set	A	136,–	15,–	151,–
Castor Set, solid rubber, Load capacity 615 kg / castor set	E	103,–	15,–	118,–
SKN 400, painted	E	600,–	130,–	730,–
Lid, galvanized	E	156,–	16,–	172,–
Castor Set, polyamide, Load capacity 1050 kg / castor set	A	136,–	15,–	151,–
Castor Set, solid rubber, Load capacity 615 kg / castor set	E	103,–	15,–	118,–
SKN 400, hot-dip galvanized	E	649,–	130,–	779,–
Lid, galvanized	E	156,–	16,–	172,–
Castor Set, polyamide, Load capacity 1050 kg / castor set	A	136,–	15,–	151,–
Castor Set, solid rubber, Load capacity 615 kg / castor set	E	103,–	15,–	118,–

Swarf Tipping Skip Type SKS	Category	Price	Freight charges	Price including freight charges
SKS 400, painted	E	946,–	201,–	1147,–
SKS 550, painted	E	1013,–	201,–	1214,–
SKS 700, painted	E	1072,–	201,–	1273,–

Swarf Barrow Tipper Type SKW-ET	Category	Price	Freight charges	Price including freight charges
SKW-ET 250, painted	E	638,–	130,–	768,–
Lid, galvanized	E	136,–	15,–	151,–
SKW-ET 250, hot-dip galvanized	E	975,–	130,–	1105,–
Lid, galvanized	E	136,–	15,–	151,–
SKW-ET 400, painted	E	697,–	130,–	827,–
Lid, galvanized	E	156,–	16,–	172,–
SKW-ET 400, hot-dip galvanized	E	1071,–	130,–	1201,–
Lid, galvanized	E	156,–	16,–	172,–
SKW-ET 600, painted	E	851,–	201,–	1052,–
Lid, galvanized	E	173,–	20,–	193,–
SKW-ET 600, hot-dip galvanized	E	1233,–	201,–	1434,–
Lid, galvanized	E	173,–	20,–	193,–
SKW-ET 1000, painted	E	1032,–	201,–	1233,–
Lid, galvanized	E	193,–	22,–	215,–
SKW-ET 1000, hot-dip galvanized	E	1643,–	201,–	1844,–
Lid, galvanized	E	193,–	22,–	215,–

Mini Swarf Tilting Container Type SMGU	Category	Price	Freight charges	Price including freight charges
SMGU 230, painted	A	689,–	130,–	819,–
Lid, galvanized	A	131,–	18,–	149,–
Castor Set, polyamide, Load capacity 1050 kg / castor set	A	156,–	15,–	171,–
SMGU 230, hot-dip galvanized	A	775,–	201,–	976,–

Prices in EUR, valid EXW DE-46354 Südlohn, DE-38820 Halberstadt, unpacked
Freight charges valid CPT Spain, islands and oversea territories excluded

BAUER GmbH
Eichendorffstr. 62
46354 Südlohn, Germany

Tel. +49 2862 70 90
info@bauer-suedlohn.com
www.bauer-suedlohn.com

Geschäftsführer
Patrick Bauer, Pascal Bauer
Amtsgericht Coesfeld HRB 5259

TÜVNORD
TÜV NORD CERT GmbH
DIN EN ISO 9001
tuev-nord.de

Price List 0726 en-ES
Forklift Truck Attachments

Mini Swarf Tilting Container Type SMGU	Category	Price	Freight charges	Price including freight charges
Lid, galvanized	A	131,–	18,–	149,–
Castor Set, polyamide, Load capacity 1050 kg / castor set	A	156,–	15,–	171,–
SMGU 270, painted	A	744,–	201,–	945,–
Lid, galvanized	A	131,–	18,–	149,–
Castor Set, polyamide, Load capacity 1050 kg / castor set	A	156,–	15,–	171,–
SMGU 270, hot-dip galvanized	A	850,–	201,–	1051,–
Lid, galvanized	A	131,–	18,–	149,–
Castor Set, polyamide, Load capacity 1050 kg / castor set	A	156,–	15,–	171,–
SMGU 460, painted	A	935,–	201,–	1136,–
Lid, galvanized	A	169,–	22,–	191,–
Castor Set, polyamide, Load capacity 1050 kg / castor set	A	156,–	15,–	171,–
SMGU 460, hot-dip galvanized	A	1088,–	201,–	1289,–
Lid, galvanized	A	169,–	22,–	191,–
Castor Set, polyamide, Load capacity 1050 kg / castor set	A	156,–	15,–	171,–
SMGU 610, painted	A	1041,–	201,–	1242,–
Lid, galvanized	A	181,–	26,–	207,–
Castor Set, polyamide, Load capacity 1050 kg / castor set	A	156,–	15,–	171,–
SMGU 610, hot-dip galvanized	A	1209,–	201,–	1410,–
Lid, galvanized	A	181,–	26,–	207,–
Castor Set, polyamide, Load capacity 1050 kg / castor set	A	156,–	15,–	171,–

Silo Container Type SR	Category	Price	Freight charges	Price including freight charges
SR 375, painted	E	844,–	130,–	974,–
Lid, galvanized	E	131,–	33,–	164,–
SR 375, hot-dip galvanized	E	1584,–	130,–	1714,–
Lid, galvanized	E	131,–	33,–	164,–
SR 600, painted	E	1048,–	201,–	1249,–
Lid, galvanized	E	131,–	33,–	164,–
SR 600, hot-dip galvanized	E	1801,–	201,–	2002,–
Lid, galvanized	E	131,–	33,–	164,–

Silo Container Type SR-D	Category	Price	Freight charges	Price including freight charges
SR-D 375, painted	E	844,–	130,–	974,–
Lid, galvanized	E	131,–	33,–	164,–
SR-D 375, hot-dip galvanized	E	1584,–	130,–	1714,–
Lid, galvanized	E	131,–	33,–	164,–
SR-D 600, painted	E	1048,–	201,–	1249,–
Lid, galvanized	E	131,–	33,–	164,–
SR-D 600, hot-dip galvanized	E	1801,–	201,–	2002,–
Lid, galvanized	E	131,–	33,–	164,–

Silo Container Type SRE	Category	Price	Freight charges	Price including freight charges
SRE 375, painted	E	962,–	201,–	1163,–
Lid, galvanized	E	131,–	33,–	164,–
SRE 375, hot-dip galvanized	E	1723,–	201,–	1924,–

Prices in EUR, valid EXW DE-46354 Südlohn, DE-38820 Halberstadt, unpacked
Freight charges valid CPT Spain, islands and oversea territories excluded

BAUER GmbH
Eichendorffstr. 62
46354 Südlohn, Germany

Tel. +49 2862 70 90
info@bauer-suedlohn.com
www.bauer-suedlohn.com

Geschäftsführer
Patrick Bauer, Pascal Bauer
Amtsgericht Coesfeld HRB 5259

TÜVNORD
TÜV NORD CERT GmbH
DIN EN ISO 9001
tuev-nord.de

Price List 0726 en-ES
Forklift Truck Attachments

Silo Container Type SRE	Category	Price	Freight charges	Price including freight charges
Lid, galvanized	E	131,–	33,–	164,–
SRE 600, painted	E	1171,–	201,–	1372,–
Lid, galvanized	E	131,–	33,–	164,–
SRE 600, hot-dip galvanized	E	1857,–	201,–	2058,–
Lid, galvanized	E	131,–	33,–	164,–

Silo Container Type SRE-D	Category	Price	Freight charges	Price including freight charges
SRE-D 375, painted	E	962,–	130,–	1092,–
Lid, galvanized	E	131,–	33,–	164,–
SRE-D 375, hot-dip galvanized	E	1723,–	201,–	1924,–
Lid, galvanized	E	131,–	33,–	164,–
SRE-D 600, painted	E	1171,–	201,–	1372,–
Lid, galvanized	E	131,–	33,–	164,–
SRE-D 600, hot-dip galvanized	E	1857,–	201,–	2058,–
Lid, galvanized	E	131,–	33,–	164,–

Forklift Tender System Type STS	Category	Price	Freight charges	Price including freight charges
STS 2,5, painted	C	3857,–	on request	on request
STS 5,0, painted	C	4546,–	on request	on request

Spreader Type STW	Category	Price	Freight charges	Price including freight charges
STW 100, painted	A	1216,–	130,–	1346,–
Tarpaulin	A	116,–	10,–	126,–
STW 260, painted	A	2147,–	130,–	2277,–
Tarpaulin	A	122,–	10,–	132,–

Traverse for Big Bags Type TBB	Category	Price	Freight charges	Price including freight charges
TBB, painted	A	901,–	130,–	1031,–

Traverse For Big Bags Type TBB-E	Category	Price	Freight charges	Price including freight charges
TBB-E, painted	A	852,–	130,–	982,–

Traverse For Big Bags Type TBB-W	Category	Price	Freight charges	Price including freight charges
TBB-W, painted	A	1093,–	130,–	1223,–

Mini Lifting Beam Type TM	Category	Price	Freight charges	Price including freight charges
TM 200-500, hot-dip galvanized	F	399,–	60,–	459,–
TM 400-800, hot-dip galvanized	F	429,–	60,–	489,–
TM 800-1200, hot-dip galvanized	F	566,–	60,–	626,–

Tilting Container Type TRIO	Category	Price	Freight charges	Price including freight charges
TRIO, painted	A	2333,–	357,–	2690,–
Lid, galvanized	A	215,–	26,–	241,–
Castor Set, polyamide, Load capacity 1350 kg / castor set	A	192,–	15,–	207,–

Prices in EUR, valid EXW DE-46354 Südlohn, DE-38820 Halberstadt, unpacked
Freight charges valid CPT Spain, islands and oversea territories excluded

BAUER GmbH
Eichendorffstr. 62
46354 Südlohn, Germany

Tel. +49 2862 70 90
info@bauer-suedlohn.com
www.bauer-suedlohn.com

Geschäftsführer
Patrick Bauer, Pascal Bauer
Amtsgericht Coesfeld HRB 5259

TÜVNORD
TÜV NORD CERT GmbH
DIN EN ISO 9001
tuev-nord.de

Price List 0726 en-ES
Forklift Truck Attachments

Tilting Container Type TRIO	Category	Price	Freight charges	Price including freight charges
Set of 5 self-adhesive stickers with symbols for: glass, paper, plastic, metal, residual waste	A	29,–	on request	on request

Universal Container Type UC	Category	Price	Freight charges	Price including freight charges
UC 500, painted	A	675,–	130,–	805,–
Lid, galvanized	A	168,–	16,–	184,–
Castor Set, polyamide, Load capacity 1350 kg / castor set	A	192,–	15,–	207,–
Pick-up Profile on Type UC for Traverse Type UCT	A	106,–	0,–	106,–
UC 500, hot-dip galvanized	A	771,–	201,–	972,–
Lid, galvanized	A	168,–	16,–	184,–
Castor Set, polyamide, Load capacity 1350 kg / castor set	A	192,–	15,–	207,–
Pick-up Profile on Type UC for Traverse Type UCT	A	106,–	0,–	106,–
UC 750, painted	A	734,–	201,–	935,–
Lid, galvanized	A	168,–	16,–	184,–
Castor Set, polyamide, Load capacity 1350 kg / castor set	A	192,–	15,–	207,–
Pick-up Profile on Type UC for Traverse Type UCT	A	106,–	0,–	106,–
UC 750, hot-dip galvanized	A	853,–	201,–	1054,–
Lid, galvanized	A	168,–	16,–	184,–
Castor Set, polyamide, Load capacity 1350 kg / castor set	A	192,–	15,–	207,–
Pick-up Profile on Type UC for Traverse Type UCT	A	106,–	0,–	106,–
UC 1000, painted	A	771,–	201,–	972,–
Lid, galvanized	A	168,–	16,–	184,–
Castor Set, polyamide, Load capacity 1350 kg / castor set	A	192,–	15,–	207,–
Pick-up Profile on Type UC for Traverse Type UCT	A	106,–	0,–	106,–
UC 1000, hot-dip galvanized	A	894,–	201,–	1095,–
Lid, galvanized	A	168,–	16,–	184,–
Castor Set, polyamide, Load capacity 1350 kg / castor set	A	192,–	15,–	207,–
Pick-up Profile on Type UC for Traverse Type UCT	A	106,–	0,–	106,–

Hydraulic Traverse Type UCT	Category	Price	Freight charges	Price including freight charges
UCT, painted	A	2737,–	291,–	3028,–

Tilting Container Type VD	Category	Price	Freight charges	Price including freight charges
VD 500, painted	A	794,–	201,–	995,–
Lid, galvanized	A	144,–	18,–	162,–
Castor Set, polyamide, Load capacity 1350 kg / castor set	A	192,–	15,–	207,–
Skip Body Welded Oil and Watertight	A	78,–	0,–	78,–
VD 500, hot-dip galvanized	A	1033,–	201,–	1234,–
Lid, galvanized	A	144,–	18,–	162,–
Castor Set, polyamide, Load capacity 1350 kg / castor set	A	192,–	15,–	207,–
Skip Body Welded Oil and Watertight	A	78,–	0,–	78,–
VD 650, painted	A	868,–	201,–	1069,–
Lid, galvanized	A	144,–	18,–	162,–
Castor Set, polyamide, Load capacity 1350 kg / castor set	A	192,–	15,–	207,–
Skip Body Welded Oil and Watertight	A	78,–	0,–	78,–
VD 650, hot-dip galvanized	A	1130,–	201,–	1331,–

Prices in EUR, valid EXW DE-46354 Südlohn, DE-38820 Halberstadt, unpacked
Freight charges valid CPT Spain, islands and oversea territories excluded

BAUER GmbH
Eichendorffstr. 62
46354 Südlohn, Germany

Tel. +49 2862 70 90
info@bauer-suedlohn.com
www.bauer-suedlohn.com

Geschäftsführer
Patrick Bauer, Pascal Bauer
Amtsgericht Coesfeld HRB 5259

TÜVNORD
TÜV NORD CERT GmbH
DIN EN ISO 9001
tuev-nord.de

Price List 0726 en-ES
Forklift Truck Attachments

Tilting Container Type VD	Category	Price	Freight charges	Price including freight charges
Lid, galvanized	A	144,–	18,–	162,–
Castor Set, polyamide, Load capacity 1350 kg / castor set	A	192,–	15,–	207,–
Skip Body Welded Oil and Watertight	A	78,–	0,–	78,–
VD 800, painted	A	991,–	201,–	1192,–
Lid, galvanized	A	174,–	22,–	196,–
Castor Set, polyamide, Load capacity 1350 kg / castor set	A	192,–	15,–	207,–
Skip Body Welded Oil and Watertight	A	78,–	0,–	78,–
VD 800, hot-dip galvanized	A	1346,–	201,–	1547,–
Lid, galvanized	A	174,–	22,–	196,–
Castor Set, polyamide, Load capacity 1350 kg / castor set	A	192,–	15,–	207,–
Skip Body Welded Oil and Watertight	A	78,–	0,–	78,–
VD 1000, painted	A	1041,–	201,–	1242,–
Lid, galvanized	A	174,–	22,–	196,–
Castor Set, polyamide, Load capacity 1350 kg / castor set	A	192,–	15,–	207,–
Skip Body Welded Oil and Watertight	A	121,–	0,–	121,–
VD 1000, hot-dip galvanized	A	1469,–	201,–	1670,–
Lid, galvanized	A	174,–	22,–	196,–
Castor Set, polyamide, Load capacity 1350 kg / castor set	A	192,–	15,–	207,–
Skip Body Welded Oil and Watertight	A	121,–	0,–	121,–

Tilting Container Type VG	Category	Price	Freight charges	Price including freight charges
VG 550, painted	A	812,–	201,–	1013,–
Lid, galvanized	A	144,–	18,–	162,–
Castor Set, polyamide, Load capacity 1350 kg / castor set	A	192,–	15,–	207,–
Skip Body Welded Oil and Watertight	A	78,–	0,–	78,–
VG 550, hot-dip galvanized	A	1058,–	201,–	1259,–
Lid, galvanized	A	144,–	18,–	162,–
Castor Set, polyamide, Load capacity 1350 kg / castor set	A	192,–	15,–	207,–
Skip Body Welded Oil and Watertight	A	78,–	0,–	78,–
VG 700, painted	A	962,–	201,–	1163,–
Lid, galvanized	A	144,–	18,–	162,–
Castor Set, polyamide, Load capacity 1350 kg / castor set	A	192,–	15,–	207,–
Skip Body Welded Oil and Watertight	A	78,–	0,–	78,–
VG 700, hot-dip galvanized	A	1252,–	201,–	1453,–
Lid, galvanized	A	144,–	18,–	162,–
Castor Set, polyamide, Load capacity 1350 kg / castor set	A	192,–	15,–	207,–
Skip Body Welded Oil and Watertight	A	78,–	0,–	78,–
VG 900, painted	A	1060,–	201,–	1261,–
Lid, galvanized	A	174,–	22,–	196,–
Castor Set, polyamide, Load capacity 1350 kg / castor set	A	192,–	15,–	207,–
Skip Body Welded Oil and Watertight	A	78,–	0,–	78,–
VG 900, hot-dip galvanized	A	1502,–	201,–	1703,–
Lid, galvanized	A	174,–	22,–	196,–
Castor Set, polyamide, Load capacity 1350 kg / castor set	A	192,–	15,–	207,–
Skip Body Welded Oil and Watertight	A	78,–	0,–	78,–
VG 1100, painted	A	1150,–	201,–	1351,–

Prices in EUR, valid EXW DE-46354 Südlohn, DE-38820 Halberstadt, unpacked
Freight charges valid CPT Spain, islands and oversea territories excluded

BAUER GmbH
Eichendorffstr. 62
46354 Südlohn, Germany

Tel. +49 2862 70 90
info@bauer-suedlohn.com
www.bauer-suedlohn.com

Geschäftsführer
Patrick Bauer, Pascal Bauer
Amtsgericht Coesfeld HRB 5259

TÜVNORD
TÜV NORD CERT GmbH
DIN EN ISO 9001
tuev-nord.de

Price List 0726 en-ES
Forklift Truck Attachments

Tilting Container Type VG	Category	Price	Freight charges	Price including freight charges
Lid, galvanized	A	174,–	22,–	196,–
Castor Set, polyamide, Load capacity 1350 kg / castor set	A	192,–	15,–	207,–
Skip Body Welded Oil and Watertight	A	121,–	0,–	121,–
VG 1100, hot-dip galvanized	A	1561,–	201,–	1762,–
Lid, galvanized	A	174,–	22,–	196,–
Castor Set, polyamide, Load capacity 1350 kg / castor set	A	192,–	15,–	207,–
Skip Body Welded Oil and Watertight	A	121,–	0,–	121,–

Prices in EUR, valid EXW DE-46354 Südlohn, DE-38820 Halberstadt, unpacked
Freight charges valid CPT Spain, islands and oversea territories excluded

BAUER GmbH
Eichendorffstr. 62
46354 Südlohn, Germany

Tel. +49 2862 70 90
info@bauer-suedlohn.com
www.bauer-suedlohn.com

Geschäftsführer
Patrick Bauer, Pascal Bauer
Amtsgericht Coesfeld HRB 5259

TÜVNORD
TÜV NORD CERT GmbH
DIN EN ISO 9001
tuev-nord.de

Price List 0726 en-ES
Workspace Material Handling

Battery Charging Station Type BL	Category	Price	Freight charges	Price including freight charges
BL 1, painted	A	1422,–	130,–	1552,–
Fire Extinguisher	A	204,–	14,–	218,–
Storage tray for water receptacle, painted	A	64,–	13,–	77,–
BL 2, painted	A	1798,–	130,–	1928,–
Fire Extinguisher	A	204,–	14,–	218,–
Storage tray for water receptacle, painted	A	64,–	13,–	77,–
BL 3, painted	A	1798,–	130,–	1928,–
Fire Extinguisher	A	204,–	14,–	218,–
Storage tray for water receptacle, painted	A	64,–	13,–	77,–

Drum Jack Roller Type FHR	Category	Price	Freight charges	Price including freight charges
FHR 600 F, painted	B	3286,–	291,–	3577,–
FHR 600 F, hot-dip galvanized	B	3641,–	291,–	3932,–
FHR 600 G, painted	B	2617,–	201,–	2818,–
FHR 600 G, hot-dip galvanized	B	2888,–	201,–	3089,–
FHR 600 K, painted	B	2617,–	201,–	2818,–
FHR 600 K, hot-dip galvanized	B	2888,–	201,–	3089,–

Drum Trolley Type FP-L	Category	Price	Freight charges	Price including freight charges
FP-L, galvanized	C	624,–	130,–	754,–

Drum Trolley Type FP-V	Category	Price	Freight charges	Price including freight charges
FP-V, galvanized	C	605,–	130,–	735,–

Drum Dolly Type FRW	Category	Price	Freight charges	Price including freight charges
FRW-I, hot-dip galvanized	A	116,–	60,–	176,–
FRW-II, hot-dip galvanized	A	154,–	60,–	214,–
FRW-III, hot-dip galvanized	A	207,–	130,–	337,–

Dolly Type GRW	Category	Price	Freight charges	Price including freight charges
GRW-I, hot-dip galvanized	F	126,–	60,–	186,–
Handle, hot-dip galvanized	F	55,–	10,–	65,–
GRW-II, hot-dip galvanized	F	143,–	60,–	203,–
Handle, hot-dip galvanized	F	55,–	10,–	65,–
GRW-III, hot-dip galvanized	F	179,–	130,–	309,–
Handle, hot-dip galvanized	F	55,–	10,–	65,–

Gas Cylinder Wall Bracket Type GWH	Category	Price	Freight charges	Price including freight charges
GWH 140-I, hot-dip galvanized	F	26,–	60,–	86,–
GWH 140-II, hot-dip galvanized	F	40,–	60,–	100,–

Prices in EUR, valid EXW DE-46354 Südlohn, DE-38820 Halberstadt, unpacked
Freight charges valid CPT Spain, islands and oversea territories excluded

BAUER GmbH
Eichendorffstr. 62
46354 Südlohn, Germany

Tel. +49 2862 70 90
info@bauer-suedlohn.com
www.bauer-suedlohn.com

Geschäftsführer
Patrick Bauer, Pascal Bauer
Amtsgericht Coesfeld HRB 5259

TÜVNORD
TÜV NORD CERT GmbH
DIN EN ISO 9001
tuev-nord.de

Price List 0726 en-ES
Workspace Material Handling

Gas Cylinder Wall Bracket Type GWH	Category	Price	Freight charges	Price including freight charges
GWH 140-III, hot-dip galvanized	F	59,–	60,–	119,–
GWH 230-I, hot-dip galvanized	F	28,–	60,–	88,–
GWH 230-II, hot-dip galvanized	F	43,–	60,–	103,–
GWH 230-III, hot-dip galvanized	F	65,–	60,–	125,–
GWH 320-I, hot-dip galvanized	F	29,–	60,–	89,–
GWH 320-II, hot-dip galvanized	F	48,–	60,–	108,–
GWH 320-III, hot-dip galvanized	F	72,–	60,–	132,–

Fork Lifter Type GZH-A	Category	Price	Freight charges	Price including freight charges
GZH-A, painted	F	114,–	60,–	174,–

Fork Lifter Type GZH-B	Category	Price	Freight charges	Price including freight charges
GZH-B, painted	F	114,–	60,–	174,–

Fork Pallet Type GZP	Category	Price	Freight charges	Price including freight charges
GZP 4, hot-dip galvanized	A	161,–	130,–	291,–
GZP 8, hot-dip galvanized	A	201,–	130,–	331,–

IBC Residue Drainer Type IR	Category	Price	Freight charges	Price including freight charges
IR-1, hot-dip galvanized	A	596,–	130,–	726,–
IR-2, hot-dip galvanized	A	711,–	130,–	841,–
IR-3, hot-dip galvanized	A	596,–	130,–	726,–

Tilting Canister Stand Type KAH	Category	Price	Freight charges	Price including freight charges
KAH-5, galvanized	A	96,–	60,–	156,–
KAH-25, galvanized	A	109,–	60,–	169,–
KAH-60, galvanized	A	140,–	60,–	200,–

Sheet Metal Storage Units With Trays Type KBR	Category	Price	Freight charges	Price including freight charges
KBR 1, painted	A	5985,–	801,–	6786,–
KBR 2, painted	A	6207,–	on request	on request
KBR 3, painted	A	6667,–	on request	on request

Liftomat Type L/E	Category	Price	Freight charges	Price including freight charges
L/E 1300, painted	B	4908,–	291,–	5199,–
L/E 1300, hot-dip galvanized	B	5578,–	291,–	5869,–

Liftomat Type L/M	Category	Price	Freight charges	Price including freight charges
L/M 600, painted	B	3553,–	201,–	3754,–
L/M 600, hot-dip galvanized	B	4025,–	201,–	4226,–
L/M 1300, painted	B	3986,–	291,–	4277,–
L/M 1300, hot-dip galvanized	B	4569,–	291,–	4860,–

Prices in EUR, valid EXW DE-46354 Südlohn, DE-38820 Halberstadt, unpacked
Freight charges valid CPT Spain, islands and oversea territories excluded

BAUER GmbH
Eichendorffstr. 62
46354 Südlohn, Germany

Tel. +49 2862 70 90
info@bauer-suedlohn.com
www.bauer-suedlohn.com

Geschäftsführer
Patrick Bauer, Pascal Bauer
Amtsgericht Coesfeld HRB 5259

TÜVNORD
TÜV NORD CERT GmbH
DIN EN ISO 9001
tuev-nord.de

Price List 0726 en-ES
Workspace Material Handling

Security Cage for Storage Type LBM	Category	Price	Freight charges	Price including freight charges
LBM 1500, hot-dip galvanized	A	2002,–	291,–	2293,–
LBM 3000, hot-dip galvanized	A	2747,–	500,–	3247,–
LBM 4500, hot-dip galvanized	A	3492,–	500,–	3992,–
LBM 6000, hot-dip galvanized	A	4232,–	645,–	4877,–

Wheelie Bin Tipping Station Type MKS	Category	Price	Freight charges	Price including freight charges
MKS-12V, painted	A	3745,–	201,–	3946,–
External Charger for 12 V electro-hydraulic constructions	A	201,–	15,–	216,–
MKS-230V, painted	A	3745,–	201,–	3946,–

Wheelie Bin Tipping Station Type MKS-F	Category	Price	Freight charges	Price including freight charges
MKS-F, painted	A	2459,–	201,–	2660,–

Wheelie Bin Tipping Station Type MKS-H	Category	Price	Freight charges	Price including freight charges
MKS-H, painted	A	2459,–	201,–	2660,–

Stillage Transport Cage Type MTP	Category	Price	Freight charges	Price including freight charges
MTP 2000, hot-dip galvanized	A	2196,–	291,–	2487,–
Tension belt	A	48,–	8,–	56,–
MTP 3000, hot-dip galvanized	A	2774,–	357,–	3131,–
Tension belt	A	48,–	8,–	56,–

Two-Wheeled Pallet Picker Type PZ	Category	Price	Freight charges	Price including freight charges
PZ, hot-dip galvanized	F	456,–	60,–	516,–

Tyre Fitting Equipment Type RM	Category	Price	Freight charges	Price including freight charges
RM, painted	F	458,–	60,–	518,–

Surround for Waste Bins Type SECOMAT	Category	Price	Freight charges	Price including freight charges
S 120-D, powder coated	B	682,–	130,–	812,–
S 120-K, powder coated	B	764,–	130,–	894,–
S 240-D, powder coated	B	782,–	130,–	912,–
S 240-K, powder coated	B	856,–	130,–	986,–
S1100, powder-coated	B	791,–	130,–	921,–
S1100-W, powder-coated	B	1040,–	201,–	1241,–
S1100-WT, powder-coated	B	1305,–	201,–	1506,–
S1100-WTB, powder-coated	B	1408,–	201,–	1609,–
S4USE, powder coated	C	2656,–	291,–	2947,–

Gas Cylinder Pallet Type SFP	Category	Price	Freight charges	Price including freight charges
SFP 4, hot-dip galvanized	C	346,–	130,–	476,–
SFP 8, hot-dip galvanized	C	460,–	201,–	661,–

Prices in EUR, valid EXW DE-46354 Südlohn, DE-38820 Halberstadt, unpacked
Freight charges valid CPT Spain, islands and oversea territories excluded

BAUER GmbH
Eichendorffstr. 62
46354 Südlohn, Germany

Tel. +49 2862 70 90
info@bauer-suedlohn.com
www.bauer-suedlohn.com

Geschäftsführer
Patrick Bauer, Pascal Bauer
Amtsgericht Coesfeld HRB 5259

TÜVNORD
TÜV NORD CERT GmbH
DIN EN ISO 9001
tuev-nord.de

Price List 0726 en-ES
Workspace Material Handling

Loading Support Type VS	Category	Price	Freight charges	Price including freight charges
VS, painted	C	765,–	201,–	966,–

Prices in EUR, valid EXW DE-46354 Südlohn, DE-38820 Halberstadt, unpacked
Freight charges valid CPT Spain, islands and oversea territories excluded

BAUER GmbH
Eichendorffstr. 62
46354 Südlohn, Germany

Tel. +49 2862 70 90
info@bauer-suedlohn.com
www.bauer-suedlohn.com

Geschäftsführer
Patrick Bauer, Pascal Bauer
Amtsgericht Coesfeld HRB 5259

TÜVNORD
TÜV NORD CERT GmbH
DIN EN ISO 9001
tuev-nord.de

Price List 0726 en-ES
Environment / Storage

Sump Trays Type SERIES 2000	Category	Price	Freight charges	Price including freight charges
2000, painted	B	250,–	130,–	380,–
2000, hot-dip galvanized	B	288,–	130,–	418,–
2002, painted	B	285,–	130,–	415,–
2002, hot-dip galvanized	B	322,–	130,–	452,–
2008, painted	B	250,–	130,–	380,–
2008, hot-dip galvanized	B	300,–	130,–	430,–
2010, painted	B	301,–	130,–	431,–
Drum Support FA 60-1, hot-dip galvanized	B	109,–	15,–	124,–
Drum Support FA 60-2, hot-dip galvanized	B	118,–	18,–	136,–
Drum Support FA 60-3, hot-dip galvanized	B	138,–	21,–	159,–
Drum Support FA 200-1, hot-dip galvanized	B	118,–	15,–	133,–
Can Shelf Type GR-A, galvanized	B	138,–	60,–	198,–
Can Shelf Type GR-B, galvanized	B	138,–	60,–	198,–
Can Shelf Type GR-C, galvanized	B	138,–	60,–	198,–
2010, hot-dip galvanized	B	351,–	130,–	481,–
Drum Support FA 60-1, hot-dip galvanized	B	109,–	15,–	124,–
Drum Support FA 60-2, hot-dip galvanized	B	118,–	18,–	136,–
Drum Support FA 60-3, hot-dip galvanized	B	138,–	21,–	159,–
Drum Support FA 200-1, hot-dip galvanized	B	118,–	15,–	133,–
Can Shelf Type GR-A, galvanized	B	138,–	60,–	198,–
Can Shelf Type GR-B, galvanized	B	138,–	60,–	198,–
Can Shelf Type GR-C, galvanized	B	138,–	60,–	198,–
2016, painted	B	262,–	130,–	392,–
2016, hot-dip galvanized	B	314,–	130,–	444,–
2018, painted	B	315,–	130,–	445,–
Drum Support FA 60-1, hot-dip galvanized	B	109,–	15,–	124,–
Drum Support FA 60-2, hot-dip galvanized	B	118,–	18,–	136,–
Drum Support FA 60-3, hot-dip galvanized	B	138,–	21,–	159,–
Drum Support FA 200-1, hot-dip galvanized	B	118,–	15,–	133,–
Can Shelf Type GR-A, galvanized	B	138,–	60,–	198,–
Can Shelf Type GR-B, galvanized	B	138,–	60,–	198,–
Can Shelf Type GR-C, galvanized	B	138,–	60,–	198,–
2018, hot-dip galvanized	B	365,–	130,–	495,–
Drum Support FA 60-1, hot-dip galvanized	B	109,–	15,–	124,–
Drum Support FA 60-2, hot-dip galvanized	B	118,–	18,–	136,–
Drum Support FA 60-3, hot-dip galvanized	B	138,–	21,–	159,–
Drum Support FA 200-1, hot-dip galvanized	B	118,–	15,–	133,–
Can Shelf Type GR-A, galvanized	B	138,–	60,–	198,–
Can Shelf Type GR-B, galvanized	B	138,–	60,–	198,–
Can Shelf Type GR-C, galvanized	B	138,–	60,–	198,–
2026, painted	B	262,–	130,–	392,–
2026, hot-dip galvanized	B	310,–	130,–	440,–

Prices in EUR, valid EXW DE-46354 Südlohn, DE-38820 Halberstadt, unpacked
Freight charges valid CPT Spain, islands and oversea territories excluded

BAUER GmbH
Eichendorffstr. 62
46354 Südlohn, Germany

Tel. +49 2862 70 90
info@bauer-suedlohn.com
www.bauer-suedlohn.com

Geschäftsführer
Patrick Bauer, Pascal Bauer
Amtsgericht Coesfeld HRB 5259

TÜVNORD
TÜV NORD CERT GmbH
DIN EN ISO 9001
tuev-nord.de

Price List 0726 en-ES
Environment / Storage

Sump Trays Type SERIES 2000	Category	Price	Freight charges	Price including freight charges
2028, painted	B	366,–	130,–	496,–
Drum Support FA 60-1, hot-dip galvanized	B	109,–	15,–	124,–
Drum Support FA 60-2, hot-dip galvanized	B	118,–	18,–	136,–
Drum Support FA 60-3, hot-dip galvanized	B	138,–	21,–	159,–
Drum Support FA 200-1, hot-dip galvanized	B	118,–	15,–	133,–
Drum Support FA 200-2, hot-dip galvanized	B	138,–	22,–	160,–
Can Shelf Type GR-A, galvanized	B	138,–	60,–	198,–
Can Shelf Type GR-B, galvanized	B	138,–	60,–	198,–
Can Shelf Type GR-C, galvanized	B	138,–	60,–	198,–
2028, hot-dip galvanized	B	412,–	130,–	542,–
Drum Support FA 60-1, hot-dip galvanized	B	109,–	15,–	124,–
Drum Support FA 60-2, hot-dip galvanized	B	118,–	18,–	136,–
Drum Support FA 60-3, hot-dip galvanized	B	138,–	21,–	159,–
Drum Support FA 200-1, hot-dip galvanized	B	118,–	15,–	133,–
Drum Support FA 200-2, hot-dip galvanized	B	138,–	22,–	160,–
Can Shelf Type GR-A, galvanized	B	138,–	60,–	198,–
Can Shelf Type GR-B, galvanized	B	138,–	60,–	198,–
Can Shelf Type GR-C, galvanized	B	138,–	60,–	198,–
2030, painted	B	275,–	130,–	405,–
2030, hot-dip galvanized	B	321,–	130,–	451,–
2032, painted	B	378,–	130,–	508,–
Drum Support FA 60-1, hot-dip galvanized	B	109,–	15,–	124,–
Drum Support FA 60-2, hot-dip galvanized	B	118,–	18,–	136,–
Drum Support FA 60-3, hot-dip galvanized	B	138,–	21,–	159,–
Drum Support FA 200-1, hot-dip galvanized	B	118,–	15,–	133,–
Drum Support FA 200-2, hot-dip galvanized	B	138,–	22,–	160,–
Can Shelf Type GR-A, galvanized	B	138,–	60,–	198,–
Can Shelf Type GR-B, galvanized	B	138,–	60,–	198,–
Can Shelf Type GR-C, galvanized	B	138,–	60,–	198,–
2032, hot-dip galvanized	B	426,–	130,–	556,–
Drum Support FA 60-1, hot-dip galvanized	B	109,–	15,–	124,–
Drum Support FA 60-2, hot-dip galvanized	B	118,–	18,–	136,–
Drum Support FA 60-3, hot-dip galvanized	B	138,–	21,–	159,–
Drum Support FA 200-1, hot-dip galvanized	B	118,–	15,–	133,–
Drum Support FA 200-2, hot-dip galvanized	B	138,–	22,–	160,–
Can Shelf Type GR-A, galvanized	B	138,–	60,–	198,–
Can Shelf Type GR-B, galvanized	B	138,–	60,–	198,–
Can Shelf Type GR-C, galvanized	B	138,–	60,–	198,–
2040, painted	B	351,–	130,–	481,–
2040, hot-dip galvanized	B	426,–	130,–	556,–
2042, painted	B	455,–	201,–	656,–
Drum Support FA 60-1, hot-dip galvanized	B	109,–	15,–	124,–
Drum Support FA 60-2, hot-dip galvanized	B	118,–	18,–	136,–
Drum Support FA 60-3, hot-dip galvanized	B	138,–	21,–	159,–
Can Shelf Type GR-A, galvanized	B	138,–	60,–	198,–
Can Shelf Type GR-B, galvanized	B	138,–	60,–	198,–

Prices in EUR, valid EXW DE-46354 Südlohn, DE-38820 Halberstadt, unpacked
Freight charges valid CPT Spain, islands and oversea territories excluded

BAUER GmbH
Eichendorffstr. 62
46354 Südlohn, Germany

Tel. +49 2862 70 90
info@bauer-suedlohn.com
www.bauer-suedlohn.com

Geschäftsführer
Patrick Bauer, Pascal Bauer
Amtsgericht Coesfeld HRB 5259

TÜVNORD
TÜV NORD CERT GmbH
DIN EN ISO 9001
tuev-nord.de

Price List 0726 en-ES
Environment / Storage

Sump Trays Type SERIES 2000	Category	Price	Freight charges	Price including freight charges
Can Shelf Type GR-C, galvanized	B	138,–	60,–	198,–
2042, hot-dip galvanized	B	529,–	201,–	730,–
Drum Support FA 60-1, hot-dip galvanized	B	109,–	15,–	124,–
Drum Support FA 60-2, hot-dip galvanized	B	118,–	18,–	136,–
Drum Support FA 60-3, hot-dip galvanized	B	138,–	21,–	159,–
Can Shelf Type GR-A, galvanized	B	138,–	60,–	198,–
Can Shelf Type GR-B, galvanized	B	138,–	60,–	198,–
Can Shelf Type GR-C, galvanized	B	138,–	60,–	198,–
2048, painted	B	271,–	130,–	401,–
2048, hot-dip galvanized	B	316,–	130,–	446,–
2050, painted	B	369,–	130,–	499,–
Drum Support FA 60-1, hot-dip galvanized	B	109,–	15,–	124,–
Drum Support FA 60-2, hot-dip galvanized	B	118,–	18,–	136,–
Drum Support FA 60-3, hot-dip galvanized	B	138,–	21,–	159,–
Can Shelf Type GR-A, galvanized	B	138,–	60,–	198,–
Can Shelf Type GR-B, galvanized	B	138,–	60,–	198,–
Can Shelf Type GR-C, galvanized	B	138,–	60,–	198,–
2050, hot-dip galvanized	B	414,–	130,–	544,–
Drum Support FA 60-1, hot-dip galvanized	B	109,–	15,–	124,–
Drum Support FA 60-2, hot-dip galvanized	B	118,–	18,–	136,–
Drum Support FA 60-3, hot-dip galvanized	B	138,–	21,–	159,–
Can Shelf Type GR-A, galvanized	B	138,–	60,–	198,–
Can Shelf Type GR-B, galvanized	B	138,–	60,–	198,–
Can Shelf Type GR-C, galvanized	B	138,–	60,–	198,–

Sump Trays Type SERIES 2000/SW	Category	Price	Freight charges	Price including freight charges
2002/SW, painted	B	427,–	130,–	557,–
2002/SW, hot-dip galvanized	B	464,–	130,–	594,–
2018/SW, painted	B	468,–	201,–	669,–
Drum Support FA 60-1, hot-dip galvanized	B	109,–	15,–	124,–
Drum Support FA 60-2, hot-dip galvanized	B	118,–	18,–	136,–
Drum Support FA 60-3, hot-dip galvanized	B	138,–	21,–	159,–
Drum Support FA 200-1, hot-dip galvanized	B	118,–	15,–	133,–
Can Shelf Type GR-A, galvanized	B	138,–	60,–	198,–
Can Shelf Type GR-B, galvanized	B	138,–	60,–	198,–
Can Shelf Type GR-C, galvanized	B	138,–	60,–	198,–
2018/SW, hot-dip galvanized	B	517,–	201,–	718,–
Drum Support FA 60-1, hot-dip galvanized	B	109,–	15,–	124,–
Drum Support FA 60-2, hot-dip galvanized	B	118,–	18,–	136,–
Drum Support FA 60-3, hot-dip galvanized	B	138,–	21,–	159,–
Drum Support FA 200-1, hot-dip galvanized	B	118,–	15,–	133,–
Can Shelf Type GR-A, galvanized	B	138,–	60,–	198,–
Can Shelf Type GR-B, galvanized	B	138,–	60,–	198,–
Can Shelf Type GR-C, galvanized	B	138,–	60,–	198,–
2032/SW, painted	B	552,–	201,–	753,–
Drum Support FA 60-1, hot-dip galvanized	B	109,–	15,–	124,–

Prices in EUR, valid EXW DE-46354 Südlohn, DE-38820 Halberstadt, unpacked
Freight charges valid CPT Spain, islands and oversea territories excluded

BAUER GmbH
Eichendorffstr. 62
46354 Südlohn, Germany

Tel. +49 2862 70 90
info@bauer-suedlohn.com
www.bauer-suedlohn.com

Geschäftsführer
Patrick Bauer, Pascal Bauer
Amtsgericht Coesfeld HRB 5259

TÜVNORD
TÜV NORD CERT GmbH
DIN EN ISO 9001
tuev-nord.de

Price List 0726 en-ES
Environment / Storage

Sump Trays Type SERIES 2000/SW	Category	Price	Freight charges	Price including freight charges
Drum Support FA 60-2, hot-dip galvanized	B	118,–	18,–	136,–
Drum Support FA 60-3, hot-dip galvanized	B	138,–	21,–	159,–
Drum Support FA 200-1, hot-dip galvanized	B	118,–	15,–	133,–
Drum Support FA 200-2, hot-dip galvanized	B	138,–	22,–	160,–
Can Shelf Type GR-A, galvanized	B	138,–	60,–	198,–
Can Shelf Type GR-B, galvanized	B	138,–	60,–	198,–
Can Shelf Type GR-C, galvanized	B	138,–	60,–	198,–
2032/SW, hot-dip galvanized	B	600,–	201,–	801,–
Drum Support FA 60-1, hot-dip galvanized	B	109,–	15,–	124,–
Drum Support FA 60-2, hot-dip galvanized	B	118,–	18,–	136,–
Drum Support FA 60-3, hot-dip galvanized	B	138,–	21,–	159,–
Drum Support FA 200-1, hot-dip galvanized	B	118,–	15,–	133,–
Drum Support FA 200-2, hot-dip galvanized	B	138,–	22,–	160,–
Can Shelf Type GR-A, galvanized	B	138,–	60,–	198,–
Can Shelf Type GR-B, galvanized	B	138,–	60,–	198,–
Can Shelf Type GR-C, galvanized	B	138,–	60,–	198,–
2042/SW, painted	B	685,–	254,–	939,–
Drum Support FA 60-1, hot-dip galvanized	B	109,–	15,–	124,–
Drum Support FA 60-2, hot-dip galvanized	B	118,–	18,–	136,–
Drum Support FA 60-3, hot-dip galvanized	B	138,–	21,–	159,–
Can Shelf Type GR-A, galvanized	B	138,–	60,–	198,–
Can Shelf Type GR-B, galvanized	B	138,–	60,–	198,–
Can Shelf Type GR-C, galvanized	B	138,–	60,–	198,–
2042/SW, hot-dip galvanized	B	760,–	254,–	1014,–
Drum Support FA 60-1, hot-dip galvanized	B	109,–	15,–	124,–
Drum Support FA 60-2, hot-dip galvanized	B	118,–	18,–	136,–
Drum Support FA 60-3, hot-dip galvanized	B	138,–	21,–	159,–
Can Shelf Type GR-A, galvanized	B	138,–	60,–	198,–
Can Shelf Type GR-B, galvanized	B	138,–	60,–	198,–
Can Shelf Type GR-C, galvanized	B	138,–	60,–	198,–

Mobile Sump Trays Type SERIES 2000	Category	Price	Freight charges	Price including freight charges
2004, painted	B	590,–	130,–	720,–
Fixture and Tension Belt for 1 x 200 Litre Drum	B	48,–	9,–	57,–
2004, hot-dip galvanized	B	657,–	130,–	787,–
Fixture and Tension Belt for 1 x 200 Litre Drum	B	48,–	9,–	57,–
2020, painted	B	656,–	130,–	786,–
Fixture and Tension Belt for 2 x 200 Litre Drums	B	48,–	9,–	57,–
2020, hot-dip galvanized	B	717,–	130,–	847,–
Fixture and Tension Belt for 2 x 200 Litre Drums	B	48,–	9,–	57,–
2050 SR, painted	B	709,–	130,–	839,–
Fixture and Tension Belt for 3 x 200 Litre Drums	B	48,–	9,–	57,–
2050 SR, hot-dip galvanized	B	766,–	201,–	967,–
Fixture and Tension Belt for 3 x 200 Litre Drums	B	48,–	9,–	57,–

Prices in EUR, valid EXW DE-46354 Südlohn, DE-38820 Halberstadt, unpacked
Freight charges valid CPT Spain, islands and oversea territories excluded

BAUER GmbH
Eichendorffstr. 62
46354 Südlohn, Germany

Tel. +49 2862 70 90
info@bauer-suedlohn.com
www.bauer-suedlohn.com

Geschäftsführer
Patrick Bauer, Pascal Bauer
Amtsgericht Coesfeld HRB 5259

TÜVNORD
TÜV NORD CERT GmbH
DIN EN ISO 9001
tuev-nord.de

Price List 0726 en-ES
Environment / Storage

Drum Shelves with Sump Trays Type SERIES 3000	Category	Price	Freight charges	Price including freight charges
3000, hot-dip galvanized	B	1091,–	201,–	1292,–
Retainer Bar	B	48,–	12,–	60,–
Rotating Support RA 200, hot-dip galvanized	B	97,–	10,–	107,–
Can Stand Type GS, hot-dip galvanized	B	65,–	18,–	83,–
Crash Guard	B	75,–	9,–	84,–
3001, hot-dip galvanized	B	919,–	201,–	1120,–
Retainer Bar	B	48,–	12,–	60,–
Rotating Support RA 200, hot-dip galvanized	B	97,–	10,–	107,–
Can Stand Type GS, hot-dip galvanized	B	65,–	18,–	83,–
Crash Guard	B	75,–	9,–	84,–
3002, hot-dip galvanized	B	1299,–	254,–	1553,–
Retainer Bar	B	48,–	12,–	60,–
Rotating Support RA 200, hot-dip galvanized	B	97,–	10,–	107,–
Can Stand Type GS, hot-dip galvanized	B	65,–	18,–	83,–
Crash Guard	B	75,–	9,–	84,–
3003, hot-dip galvanized	B	1101,–	254,–	1355,–
Retainer Bar	B	48,–	12,–	60,–
Rotating Support RA 200, hot-dip galvanized	B	97,–	10,–	107,–
Can Stand Type GS, hot-dip galvanized	B	65,–	18,–	83,–
Crash Guard	B	75,–	9,–	84,–
3004, hot-dip galvanized	B	1344,–	201,–	1545,–
Retainer Bar	B	48,–	12,–	60,–
Rotating Support RA 60, hot-dip galvanized	B	97,–	9,–	106,–
Can Stand Type GS, hot-dip galvanized	B	65,–	18,–	83,–
Crash Guard	B	75,–	9,–	84,–
3005, hot-dip galvanized	B	1216,–	201,–	1417,–
Retainer Bar	B	48,–	12,–	60,–
Rotating Support RA 60, hot-dip galvanized	B	97,–	9,–	106,–
Can Stand Type GS, hot-dip galvanized	B	65,–	18,–	83,–
Crash Guard	B	75,–	9,–	84,–
3006, hot-dip galvanized	B	1697,–	344,–	2041,–
Retainer Bar	B	48,–	12,–	60,–
Rotating Support RA 60, hot-dip galvanized	B	97,–	9,–	106,–
Can Stand Type GS, hot-dip galvanized	B	65,–	18,–	83,–
Crash Guard	B	75,–	9,–	84,–
3007, hot-dip galvanized	B	1449,–	254,–	1703,–
Retainer Bar	B	48,–	12,–	60,–
Rotating Support RA 60, hot-dip galvanized	B	97,–	9,–	106,–
Can Stand Type GS, hot-dip galvanized	B	65,–	18,–	83,–
Crash Guard	B	75,–	9,–	84,–
3010, hot-dip galvanized	B	1288,–	254,–	1542,–
Retainer Bar	B	48,–	12,–	60,–
Rotating Support RA 200, hot-dip galvanized	B	97,–	10,–	107,–
Can Stand Type GS, hot-dip galvanized	B	65,–	18,–	83,–
Crash Guard	B	75,–	9,–	84,–
3011, hot-dip galvanized	B	1071,–	254,–	1325,–

Prices in EUR, valid EXW DE-46354 Südlohn, DE-38820 Halberstadt, unpacked
Freight charges valid CPT Spain, islands and oversea territories excluded

BAUER GmbH
Eichendorffstr. 62
46354 Südlohn, Germany

Tel. +49 2862 70 90
info@bauer-suedlohn.com
www.bauer-suedlohn.com

Geschäftsführer
Patrick Bauer, Pascal Bauer
Amtsgericht Coesfeld HRB 5259

TÜVNORD
TÜV NORD CERT GmbH
DIN EN ISO 9001
tuev-nord.de

Price List 0726 en-ES
Environment / Storage

Drum Shelves with Sump Trays Type SERIES 3000	Category	Price	Freight charges	Price including freight charges
Retainer Bar	B	48,–	12,–	60,–
Rotating Support RA 200, hot-dip galvanized	B	97,–	10,–	107,–
Can Stand Type GS, hot-dip galvanized	B	65,–	18,–	83,–
Crash Guard	B	75,–	9,–	84,–

Small Can Shelves with Sumps Type SERIES 3000	Category	Price	Freight charges	Price including freight charges
3017-4E, galvanized	B	478,–	130,–	608,–
3018-4E, galvanized	B	397,–	130,–	527,–
3019-4E, galvanized	B	576,–	201,–	777,–
3020-4E, galvanized	B	493,–	201,–	694,–
3021-4E, galvanized	B	719,–	201,–	920,–
3022-4E, galvanized	B	626,–	130,–	756,–
3023-4E, galvanized	B	1162,–	254,–	1416,–
3024-4E, galvanized	B	968,–	254,–	1222,–

Shelves Type AG	Category	Price	Freight charges	Price including freight charges
AG 60-1, hot-dip galvanized	B	112,–	12,–	124,–
AG 60-2, hot-dip galvanized	B	117,–	14,–	131,–
AG 60-3, hot-dip galvanized	B	126,–	15,–	141,–

Sump Tray Type AM	Category	Price	Freight charges	Price including freight charges
AM-1, painted	B	335,–	130,–	465,–
AM-1, hot-dip galvanized	B	379,–	130,–	509,–
AM-2, painted	B	370,–	130,–	500,–
Drum Support FA 60-1, hot-dip galvanized	B	109,–	15,–	124,–
Drum Support FA 60-2, hot-dip galvanized	B	118,–	18,–	136,–
Drum Support FA 60-3, hot-dip galvanized	B	138,–	21,–	159,–
Drum Support FA 200-1, hot-dip galvanized	B	118,–	15,–	133,–
Can Shelf Type GR-A, galvanized	B	138,–	60,–	198,–
Can Shelf Type GR-B, galvanized	B	138,–	60,–	198,–
Can Shelf Type GR-C, galvanized	B	138,–	60,–	198,–
AM-2, hot-dip galvanized	B	427,–	130,–	557,–
Drum Support FA 60-1, hot-dip galvanized	B	109,–	15,–	124,–
Drum Support FA 60-2, hot-dip galvanized	B	118,–	18,–	136,–
Drum Support FA 60-3, hot-dip galvanized	B	138,–	21,–	159,–
Drum Support FA 200-1, hot-dip galvanized	B	118,–	15,–	133,–
Can Shelf Type GR-A, galvanized	B	138,–	60,–	198,–
Can Shelf Type GR-B, galvanized	B	138,–	60,–	198,–
Can Shelf Type GR-C, galvanized	B	138,–	60,–	198,–
AM-4/A, painted	B	443,–	130,–	573,–
Drum Support FA 60-1, hot-dip galvanized	B	109,–	15,–	124,–
Drum Support FA 60-2, hot-dip galvanized	B	118,–	18,–	136,–
Drum Support FA 60-3, hot-dip galvanized	B	138,–	21,–	159,–
Drum Support FA 200-1, hot-dip galvanized	B	118,–	15,–	133,–
Drum Support FA 200-2, hot-dip galvanized	B	138,–	22,–	160,–

Prices in EUR, valid EXW DE-46354 Südlohn, DE-38820 Halberstadt, unpacked
Freight charges valid CPT Spain, islands and oversea territories excluded

BAUER GmbH
Eichendorffstr. 62
46354 Südlohn, Germany

Tel. +49 2862 70 90
info@bauer-suedlohn.com
www.bauer-suedlohn.com

Geschäftsführer
Patrick Bauer, Pascal Bauer
Amtsgericht Coesfeld HRB 5259

TÜVNORD
TÜV NORD CERT GmbH
DIN EN ISO 9001
tuev-nord.de

Price List 0726 en-ES
Environment / Storage

Sump Tray Type AM	Category	Price	Freight charges	Price including freight charges
Can Shelf Type GR-A, galvanized	B	138,–	60,–	198,–
Can Shelf Type GR-B, galvanized	B	138,–	60,–	198,–
Can Shelf Type GR-C, galvanized	B	138,–	60,–	198,–
AM-4/A, hot-dip galvanized	B	499,–	201,–	700,–
Drum Support FA 60-1, hot-dip galvanized	B	109,–	15,–	124,–
Drum Support FA 60-2, hot-dip galvanized	B	118,–	18,–	136,–
Drum Support FA 60-3, hot-dip galvanized	B	138,–	21,–	159,–
Drum Support FA 200-1, hot-dip galvanized	B	118,–	15,–	133,–
Drum Support FA 200-2, hot-dip galvanized	B	138,–	22,–	160,–
Can Shelf Type GR-A, galvanized	B	138,–	60,–	198,–
Can Shelf Type GR-B, galvanized	B	138,–	60,–	198,–
Can Shelf Type GR-C, galvanized	B	138,–	60,–	198,–
AM-4/B, painted	B	532,–	201,–	733,–
Drum Support FA 60-1, hot-dip galvanized	B	109,–	15,–	124,–
Drum Support FA 60-2, hot-dip galvanized	B	118,–	18,–	136,–
Drum Support FA 60-3, hot-dip galvanized	B	138,–	21,–	159,–
Can Shelf Type GR-A, galvanized	B	138,–	60,–	198,–
Can Shelf Type GR-B, galvanized	B	138,–	60,–	198,–
Can Shelf Type GR-C, galvanized	B	138,–	60,–	198,–
AM-4/B, hot-dip galvanized	B	624,–	201,–	825,–
Drum Support FA 60-1, hot-dip galvanized	B	109,–	15,–	124,–
Drum Support FA 60-2, hot-dip galvanized	B	118,–	18,–	136,–
Drum Support FA 60-3, hot-dip galvanized	B	138,–	21,–	159,–
Can Shelf Type GR-A, galvanized	B	138,–	60,–	198,–
Can Shelf Type GR-B, galvanized	B	138,–	60,–	198,–
Can Shelf Type GR-C, galvanized	B	138,–	60,–	198,–

Sump Tray Type AO	Category	Price	Freight charges	Price including freight charges
AO-1, painted	B	292,–	130,–	422,–
AO-1, hot-dip galvanized	B	337,–	130,–	467,–
AO-2, painted	B	310,–	130,–	440,–
AO-2, hot-dip galvanized	B	367,–	130,–	497,–
AO-4/A, painted	B	322,–	130,–	452,–
AO-4/A, hot-dip galvanized	B	378,–	130,–	508,–
AO-4/B, painted	B	412,–	130,–	542,–
AO-4/B, hot-dip galvanized	B	500,–	130,–	630,–

Sump Tray Type AW	Category	Price	Freight charges	Price including freight charges
AW 450, painted	B	641,–	201,–	842,–
AW 450, hot-dip galvanized	B	795,–	201,–	996,–
AW 800, painted	B	667,–	201,–	868,–
AW 800, hot-dip galvanized	B	831,–	201,–	1032,–
AW 1000, painted	B	672,–	201,–	873,–
AW 1000, hot-dip galvanized	B	838,–	201,–	1039,–
AW 1000-2, painted	B	861,–	344,–	1205,–

Prices in EUR, valid EXW DE-46354 Südlohn, DE-38820 Halberstadt, unpacked
Freight charges valid CPT Spain, islands and oversea territories excluded

BAUER GmbH
Eichendorffstr. 62
46354 Südlohn, Germany

Tel. +49 2862 70 90
info@bauer-suedlohn.com
www.bauer-suedlohn.com

Geschäftsführer
Patrick Bauer, Pascal Bauer
Amtsgericht Coesfeld HRB 5259

TÜVNORD
TÜV NORD CERT GmbH
DIN EN ISO 9001
tuev-nord.de

Price List 0726 en-ES
Environment / Storage

Sump Tray Type AW	Category	Price	Freight charges	Price including freight charges
AW 1000-2, hot-dip galvanized	B	966,–	344,–	1310,–
AW 1000-3, painted	B	1524,–	344,–	1868,–
AW 1000-3, hot-dip galvanized	B	1641,–	410,–	2051,–
AW 1000-10F, painted	B	1032,–	344,–	1376,–
AW 1000-10F, hot-dip galvanized	B	1195,–	344,–	1539,–

Sump Tray Type AW/SW	Category	Price	Freight charges	Price including freight charges
AW 450/SW, painted	B	844,–	201,–	1045,–
AW 450/SW, hot-dip galvanized	B	998,–	291,–	1289,–
AW 800/SW, painted	B	869,–	291,–	1160,–
AW 800/SW, hot-dip galvanized	B	1032,–	291,–	1323,–
AW 1000/SW, painted	B	874,–	291,–	1165,–
AW 1000/SW, hot-dip galvanized	B	1042,–	291,–	1333,–
AW 1000-2/SW, painted	B	1091,–	344,–	1435,–
AW 1000-2/SW, hot-dip galvanized	B	1196,–	410,–	1606,–
AW 1000-3/SW, painted	B	1787,–	on request	on request
AW 1000-3/SW, hot-dip galvanized	B	2121,–	on request	on request
AW 1000-10F/SW, painted	B	1387,–	410,–	1797,–
AW 1000-10F/SW, hot-dip galvanized	B	1548,–	410,–	1958,–

Mobile Sump Tray AW 60-1 SR	Category	Price	Freight charges	Price including freight charges
AW 60-1 SR, painted	B	325,–	130,–	455,–
Fixture and Tension belt for 2 x 60 Litre Drums	B	45,–	8,–	53,–
AW 60-1 SR, hot-dip galvanized	B	345,–	130,–	475,–
Fixture and Tension belt for 2 x 60 Litre Drums	B	45,–	8,–	53,–

Mobile Sump Tray AW 60-1 SRF	Category	Price	Freight charges	Price including freight charges
AW 60-1 SRF, painted	B	429,–	130,–	559,–
AW 60-1 SRF, hot-dip galvanized	B	451,–	130,–	581,–

Sump Tray Type AW 60	Category	Price	Freight charges	Price including freight charges
AW 60-1, painted	B	176,–	60,–	236,–
Grid GR 60-1, hot-dip galvanized	B	23,–	8,–	31,–
Drum Suppport FA 60-A, galvanized	B	25,–	8,–	33,–
Rotating Support RA 60-A, hot-dip galvanized	B	97,–	9,–	106,–
AG 60-1, hot-dip galvanized	B	112,–	12,–	124,–
Canister Stand AB, galvanized	B	19,–	8,–	27,–
Castor Set, polyamide, Load capacity 375 kg / castor set	B	86,–	15,–	101,–
AW 60-1, hot-dip galvanized	B	189,–	60,–	249,–
Grid GR 60-1, hot-dip galvanized	B	23,–	8,–	31,–
Drum Suppport FA 60-A, galvanized	B	25,–	8,–	33,–
Rotating Support RA 60-A, hot-dip galvanized	B	97,–	9,–	106,–
AG 60-1, hot-dip galvanized	B	112,–	12,–	124,–
Canister Stand AB, galvanized	B	19,–	8,–	27,–
Castor Set, polyamide, Load capacity 375 kg / castor set	B	86,–	15,–	101,–

Prices in EUR, valid EXW DE-46354 Südlohn, DE-38820 Halberstadt, unpacked
Freight charges valid CPT Spain, islands and oversea territories excluded

BAUER GmbH
Eichendorffstr. 62
46354 Südlohn, Germany

Tel. +49 2862 70 90
info@bauer-suedlohn.com
www.bauer-suedlohn.com

Geschäftsführer
Patrick Bauer, Pascal Bauer
Amtsgericht Coesfeld HRB 5259

TÜVNORD
TÜV NORD CERT GmbH
DIN EN ISO 9001
tuev-nord.de

Price List 0726 en-ES
Environment / Storage

Sump Tray Type AW 60	Category	Price	Freight charges	Price including freight charges
AW 60-2, painted	B	177,–	130,–	307,–
Grid GR 60-2, hot-dip galvanized	B	27,–	12,–	39,–
Drum Suppport FA 60-A, galvanized	B	25,–	8,–	33,–
Rotating Support RA 60-A, hot-dip galvanized	B	97,–	9,–	106,–
AG 60-2, hot-dip galvanized	B	117,–	14,–	131,–
Canister Stand AB, galvanized	B	19,–	8,–	27,–
Castor Set, polyamide, Load capacity 375 kg / castor set	B	86,–	15,–	101,–
AW 60-2, hot-dip galvanized	B	195,–	130,–	325,–
Grid GR 60-2, hot-dip galvanized	B	27,–	12,–	39,–
Drum Suppport FA 60-A, galvanized	B	25,–	8,–	33,–
Rotating Support RA 60-A, hot-dip galvanized	B	97,–	9,–	106,–
AG 60-2, hot-dip galvanized	B	117,–	14,–	131,–
Canister Stand AB, galvanized	B	19,–	8,–	27,–
Castor Set, polyamide, Load capacity 375 kg / castor set	B	86,–	15,–	101,–
AW 60-3, painted	B	193,–	130,–	323,–
Grid GR 60-3, hot-dip galvanized	B	40,–	14,–	54,–
Drum Suppport FA 60-A, galvanized	B	25,–	8,–	33,–
Rotating Support RA 60-A, hot-dip galvanized	B	97,–	9,–	106,–
AG 60-3, hot-dip galvanized	B	126,–	15,–	141,–
Canister Stand AB, galvanized	B	19,–	8,–	27,–
Castor Set, polyamide, Load capacity 375 kg / castor set	B	86,–	15,–	101,–
AW 60-3, hot-dip galvanized	B	217,–	130,–	347,–
Grid GR 60-3, hot-dip galvanized	B	40,–	14,–	54,–
Drum Suppport FA 60-A, galvanized	B	25,–	8,–	33,–
Rotating Support RA 60-A, hot-dip galvanized	B	97,–	9,–	106,–
AG 60-3, hot-dip galvanized	B	126,–	15,–	141,–
Canister Stand AB, galvanized	B	19,–	8,–	27,–
Castor Set, polyamide, Load capacity 375 kg / castor set	B	86,–	15,–	101,–

Sump Tray Type AW 60/M	Category	Price	Freight charges	Price including freight charges
AW 60-1/M, painted	B	196,–	130,–	326,–
Drum Suppport FA 60-A, galvanized	B	25,–	8,–	33,–
Rotating Support RA 60-A, hot-dip galvanized	B	97,–	9,–	106,–
AG 60-1, hot-dip galvanized	B	112,–	12,–	124,–
Canister Stand AB, galvanized	B	19,–	8,–	27,–
Castor Set, polyamide, Load capacity 375 kg / castor set	B	86,–	15,–	101,–
AW 60-1/M, hot-dip galvanized	B	211,–	130,–	341,–
Drum Suppport FA 60-A, galvanized	B	25,–	8,–	33,–
Rotating Support RA 60-A, hot-dip galvanized	B	97,–	9,–	106,–
AG 60-1, hot-dip galvanized	B	112,–	12,–	124,–
Canister Stand AB, galvanized	B	19,–	8,–	27,–
Castor Set, polyamide, Load capacity 375 kg / castor set	B	86,–	15,–	101,–
AW 60-2/M, painted	B	203,–	130,–	333,–
Drum Suppport FA 60-A, galvanized	B	25,–	8,–	33,–
Drum Support FA 60-2, hot-dip galvanized	B	118,–	18,–	136,–
Rotating Support RA 60-A, hot-dip galvanized	B	97,–	9,–	106,–

Prices in EUR, valid EXW DE-46354 Südlohn, DE-38820 Halberstadt, unpacked
Freight charges valid CPT Spain, islands and oversea territories excluded

BAUER GmbH
Eichendorffstr. 62
46354 Südlohn, Germany

Tel. +49 2862 70 90
info@bauer-suedlohn.com
www.bauer-suedlohn.com

Geschäftsführer
Patrick Bauer, Pascal Bauer
Amtsgericht Coesfeld HRB 5259

TÜVNORD
TÜV NORD CERT GmbH
DIN EN ISO 9001
tuev-nord.de

Price List 0726 en-ES
Environment / Storage

Sump Tray Type AW 60/M	Category	Price	Freight charges	Price including freight charges
AG 60-2, hot-dip galvanized	B	117,–	14,–	131,–
Canister Stand AB, galvanized	B	19,–	8,–	27,–
Castor Set, polyamide, Load capacity 375 kg / castor set	B	86,–	15,–	101,–
AW 60-2/M, hot-dip galvanized	B	221,–	130,–	351,–
Drum Suppport FA 60-A, galvanized	B	25,–	8,–	33,–
Drum Support FA 60-2, hot-dip galvanized	B	118,–	18,–	136,–
Rotating Support RA 60-A, hot-dip galvanized	B	97,–	9,–	106,–
AG 60-2, hot-dip galvanized	B	117,–	14,–	131,–
Canister Stand AB, galvanized	B	19,–	8,–	27,–
Castor Set, polyamide, Load capacity 375 kg / castor set	B	86,–	15,–	101,–
AW 60-3/M, painted	B	232,–	130,–	362,–
Drum Suppport FA 60-A, galvanized	B	25,–	8,–	33,–
Drum Support FA 60-2, hot-dip galvanized	B	118,–	18,–	136,–
Drum Support FA 60-3, hot-dip galvanized	B	138,–	21,–	159,–
Rotating Support RA 60-A, hot-dip galvanized	B	97,–	9,–	106,–
AG 60-3, hot-dip galvanized	B	126,–	15,–	141,–
Canister Stand AB, galvanized	B	19,–	8,–	27,–
Castor Set, polyamide, Load capacity 375 kg / castor set	B	86,–	15,–	101,–
AW 60-3/M, hot-dip galvanized	B	254,–	130,–	384,–
Drum Suppport FA 60-A, galvanized	B	25,–	8,–	33,–
Drum Support FA 60-2, hot-dip galvanized	B	118,–	18,–	136,–
Drum Support FA 60-3, hot-dip galvanized	B	138,–	21,–	159,–
Rotating Support RA 60-A, hot-dip galvanized	B	97,–	9,–	106,–
AG 60-3, hot-dip galvanized	B	126,–	15,–	141,–
Canister Stand AB, galvanized	B	19,–	8,–	27,–
Castor Set, polyamide, Load capacity 375 kg / castor set	B	86,–	15,–	101,–

Sump Tray Type AW/PE	Category	Price	Freight charges	Price including freight charges
AW-1/PE, painted	B	658,–	130,–	788,–
AW-1/PE, hot-dip galvanized	B	688,–	130,–	818,–
AW-2/PE, painted	B	721,–	130,–	851,–
Drum Support FA 60-1, hot-dip galvanized	B	109,–	15,–	124,–
Drum Support FA 60-2, hot-dip galvanized	B	118,–	18,–	136,–
Drum Support FA 60-3, hot-dip galvanized	B	138,–	21,–	159,–
Drum Support FA 200-1, hot-dip galvanized	B	118,–	15,–	133,–
Can Shelf Type GR-A, galvanized	B	138,–	60,–	198,–
Can Shelf Type GR-B, galvanized	B	138,–	60,–	198,–
Can Shelf Type GR-C, galvanized	B	138,–	60,–	198,–
AW-2/PE, hot-dip galvanized	B	757,–	130,–	887,–
Drum Support FA 60-1, hot-dip galvanized	B	109,–	15,–	124,–
Drum Support FA 60-2, hot-dip galvanized	B	118,–	18,–	136,–
Drum Support FA 60-3, hot-dip galvanized	B	138,–	21,–	159,–
Drum Support FA 200-1, hot-dip galvanized	B	118,–	15,–	133,–
Can Shelf Type GR-A, galvanized	B	138,–	60,–	198,–
Can Shelf Type GR-B, galvanized	B	138,–	60,–	198,–
Can Shelf Type GR-C, galvanized	B	138,–	60,–	198,–

Prices in EUR, valid EXW DE-46354 Südlohn, DE-38820 Halberstadt, unpacked
Freight charges valid CPT Spain, islands and oversea territories excluded

BAUER GmbH
Eichendorffstr. 62
46354 Südlohn, Germany

Tel. +49 2862 70 90
info@bauer-suedlohn.com
www.bauer-suedlohn.com

Geschäftsführer
Patrick Bauer, Pascal Bauer
Amtsgericht Coesfeld HRB 5259

TÜVNORD
TÜV NORD CERT GmbH
DIN EN ISO 9001
tuev-nord.de

Price List 0726 en-ES
Environment / Storage

Sump Tray Type AW/PE	Category	Price	Freight charges	Price including freight charges
AW-4/A/PE, painted	B	818,–	201,–	1019,–
Drum Support FA 60-1, hot-dip galvanized	B	109,–	15,–	124,–
Drum Support FA 60-2, hot-dip galvanized	B	118,–	18,–	136,–
Drum Support FA 60-3, hot-dip galvanized	B	138,–	21,–	159,–
Drum Support FA 200-1, hot-dip galvanized	B	118,–	15,–	133,–
Drum Support FA 200-2, hot-dip galvanized	B	138,–	22,–	160,–
Can Shelf Type GR-A, galvanized	B	138,–	60,–	198,–
Can Shelf Type GR-B, galvanized	B	138,–	60,–	198,–
Can Shelf Type GR-C, galvanized	B	138,–	60,–	198,–
AW-4/A/PE, hot-dip galvanized	B	859,–	201,–	1060,–
Drum Support FA 60-1, hot-dip galvanized	B	109,–	15,–	124,–
Drum Support FA 60-2, hot-dip galvanized	B	118,–	18,–	136,–
Drum Support FA 60-3, hot-dip galvanized	B	138,–	21,–	159,–
Drum Support FA 200-1, hot-dip galvanized	B	118,–	15,–	133,–
Drum Support FA 200-2, hot-dip galvanized	B	138,–	22,–	160,–
Can Shelf Type GR-A, galvanized	B	138,–	60,–	198,–
Can Shelf Type GR-B, galvanized	B	138,–	60,–	198,–
Can Shelf Type GR-C, galvanized	B	138,–	60,–	198,–
AW-4/B/PE, painted	B	1021,–	254,–	1275,–
Drum Support FA 60-1, hot-dip galvanized	B	109,–	15,–	124,–
Drum Support FA 60-2, hot-dip galvanized	B	118,–	18,–	136,–
Drum Support FA 60-3, hot-dip galvanized	B	138,–	21,–	159,–
Can Shelf Type GR-A, galvanized	B	138,–	60,–	198,–
Can Shelf Type GR-B, galvanized	B	138,–	60,–	198,–
Can Shelf Type GR-C, galvanized	B	138,–	60,–	198,–
AW-4/B/PE, hot-dip galvanized	B	1096,–	254,–	1350,–
Drum Support FA 60-1, hot-dip galvanized	B	109,–	15,–	124,–
Drum Support FA 60-2, hot-dip galvanized	B	118,–	18,–	136,–
Drum Support FA 60-3, hot-dip galvanized	B	138,–	21,–	159,–
Can Shelf Type GR-A, galvanized	B	138,–	60,–	198,–
Can Shelf Type GR-B, galvanized	B	138,–	60,–	198,–
Can Shelf Type GR-C, galvanized	B	138,–	60,–	198,–
AW 1000/PE, painted	B	1386,–	291,–	1677,–
AW 1000/PE, hot-dip galvanized	B	1575,–	291,–	1866,–
AW 1000-2/PE, painted	B	1700,–	344,–	2044,–
AW 1000-2/PE, hot-dip galvanized	B	1818,–	344,–	2162,–

Sump Trays AW 8-12	Category	Price	Freight charges	Price including freight charges
AW-8, painted	B	732,–	254,–	986,–
AW-8, hot-dip galvanized	B	815,–	344,–	1159,–
AW-10, painted	B	904,–	344,–	1248,–
AW-10, hot-dip galvanized	B	1239,–	344,–	1583,–
AW-12, painted	B	1035,–	344,–	1379,–
AW-12, hot-dip galvanized	B	1431,–	344,–	1775,–

Prices in EUR, valid EXW DE-46354 Südlohn, DE-38820 Halberstadt, unpacked
Freight charges valid CPT Spain, islands and oversea territories excluded

BAUER GmbH
Eichendorffstr. 62
46354 Südlohn, Germany

Tel. +49 2862 70 90
info@bauer-suedlohn.com
www.bauer-suedlohn.com

Geschäftsführer
Patrick Bauer, Pascal Bauer
Amtsgericht Coesfeld HRB 5259

TÜVNORD
TÜV NORD CERT GmbH
DIN EN ISO 9001
tuev-nord.de

Price List 0726 en-ES
Environment / Storage

Sump Tray Type AWA	Category	Price	Freight charges	Price including freight charges
AWA 1000, painted	B	864,–	201,–	1065,–
AWA 1000, hot-dip galvanized	B	1045,–	291,–	1336,–
AWA 1000-2, painted	B	1239,–	344,–	1583,–
AWA 1000-2, hot-dip galvanized	B	1374,–	344,–	1718,–
AWA 1000-3, painted	B	2254,–	410,–	2664,–
AWA 1000-3, hot-dip galvanized	B	2385,–	553,–	2938,–
AWA 21, painted	B	1048,–	344,–	1392,–
AWA 21, hot-dip galvanized	B	1182,–	344,–	1526,–
AWA 31, painted	B	1956,–	410,–	2366,–
AWA 31, hot-dip galvanized	B	2077,–	410,–	2487,–
AWA 32, painted	B	2127,–	410,–	2537,–
AWA 32, hot-dip galvanized	B	2250,–	410,–	2660,–

Sump Tray Type AWA/SW	Category	Price	Freight charges	Price including freight charges
AWA 1000/SW, painted	B	1064,–	291,–	1355,–
AWA 1000/SW, hot-dip galvanized	B	1246,–	291,–	1537,–
AWA 1000-2/SW, painted	B	1472,–	410,–	1882,–
AWA 1000-2/SW, hot-dip galvanized	B	1605,–	410,–	2015,–
AWA 1000-3/SW, painted	B	2518,–	on request	on request
AWA 1000-3/SW, hot-dip galvanized	B	2648,–	on request	on request
AWA 21/SW, painted	B	1278,–	410,–	1688,–
AWA 21/SW, hot-dip galvanized	B	1413,–	410,–	1823,–
AWA 31/SW, painted	B	2217,–	on request	on request
AWA 31/SW, hot-dip galvanized	B	2339,–	on request	on request
AWA 32/SW, painted	B	2388,–	on request	on request
AWA 32/SW, hot-dip galvanized	B	2512,–	on request	on request

Sump Tray Type AW-F	Category	Price	Freight charges	Price including freight charges
AW-F 1, painted	B	657,–	130,–	787,–
Fixture and Tension Belt for 1 x 200 Litre Drum	B	48,–	9,–	57,–
AW-F 1, hot-dip galvanized	B	780,–	130,–	910,–
Fixture and Tension Belt for 1 x 200 Litre Drum	B	48,–	9,–	57,–
AW-F 2, painted	B	688,–	130,–	818,–
Fixture and Tension Belt for 2 x 200 Litre Drums	B	48,–	9,–	57,–
AW-F 2, hot-dip galvanized	B	842,–	130,–	972,–
Fixture and Tension Belt for 2 x 200 Litre Drums	B	48,–	9,–	57,–

Ground Protection Spill Tray Type BSW	Category	Price	Freight charges	Price including freight charges
BSW 21, galvanized	B	449,–	201,–	650,–
Access Ramp AR 21, galvanized	B	166,–	22,–	188,–
Access Corner Piece AE 24, galvanized	B	130,–	10,–	140,–
Cross-Shaped Connector KV 24, galvanized	B	20,–	8,–	28,–
Tray Connecting Strip WV 21, galvanized	B	22,–	8,–	30,–
BSW 22, galvanized	B	590,–	201,–	791,–
Access Ramp AR 21, galvanized	B	166,–	22,–	188,–

Prices in EUR, valid EXW DE-46354 Südlohn, DE-38820 Halberstadt, unpacked
Freight charges valid CPT Spain, islands and oversea territories excluded

BAUER GmbH
Eichendorffstr. 62
46354 Südlohn, Germany

Tel. +49 2862 70 90
info@bauer-suedlohn.com
www.bauer-suedlohn.com

Geschäftsführer
Patrick Bauer, Pascal Bauer
Amtsgericht Coesfeld HRB 5259

TÜVNORD
TÜV NORD CERT GmbH
DIN EN ISO 9001
tuev-nord.de

Price List 0726 en-ES
Environment / Storage

Ground Protection Spill Tray Type BSW	Category	Price	Freight charges	Price including freight charges
Access Ramp AR 22, galvanized	B	211,–	32,–	243,–
Access Corner Piece AE 24, galvanized	B	130,–	10,–	140,–
Cross-Shaped Connector KV 24, galvanized	B	20,–	8,–	28,–
Tray Connecting Strip WV 21, galvanized	B	22,–	8,–	30,–
Tray Connecting Strip WV 22, galvanized	B	24,–	8,–	32,–
BSW 23, galvanized	B	764,–	314,–	1078,–
Access Ramp AR 23, galvanized	B	300,–	182,–	482,–
Access Ramp AR 21, galvanized	B	166,–	22,–	188,–
Access Corner Piece AE 24, galvanized	B	130,–	10,–	140,–
Cross-Shaped Connector KV 24, galvanized	B	20,–	8,–	28,–
Tray Connecting Strip WV 21, galvanized	B	22,–	8,–	30,–
Tray Connecting Strip WV 23, galvanized	B	37,–	9,–	46,–
BSW 24, galvanized	B	1341,–	397,–	1738,–
Access Ramp AR 23, galvanized	B	300,–	182,–	482,–
Access Ramp AR 22, galvanized	B	211,–	32,–	243,–
Access Corner Piece AE 24, galvanized	B	130,–	10,–	140,–
Cross-Shaped Connector KV 24, galvanized	B	20,–	8,–	28,–
Tray Connecting Strip WV 22, galvanized	B	24,–	8,–	32,–
Tray Connecting Strip WV 23, galvanized	B	37,–	9,–	46,–
BSW 121, galvanized	B	199,–	60,–	259,–
Access Ramp AR 121, galvanized	B	163,–	22,–	185,–
Cross-Shaped Connector KV 24, galvanized	B	20,–	8,–	28,–
Tray Connecting Strip WV 121, galvanized	B	21,–	9,–	30,–
BSW 122, galvanized	B	243,–	130,–	373,–
Access Ramp AR 121, galvanized	B	163,–	22,–	185,–
Access Ramp AR 122, galvanized	B	275,–	36,–	311,–
Access Corner Piece AE 124, galvanized	B	261,–	21,–	282,–
Cross-Shaped Connector KV 24, galvanized	B	20,–	8,–	28,–
Tray Connecting Strip WV 121, galvanized	B	21,–	9,–	30,–
Tray Connecting Strip WV 122, galvanized	B	26,–	9,–	35,–
BSW 123, galvanized	B	339,–	130,–	469,–
Access Ramp AR 122, galvanized	B	275,–	36,–	311,–
Access Corner Piece AE 124, galvanized	B	261,–	21,–	282,–
Cross-Shaped Connector KV 24, galvanized	B	20,–	8,–	28,–
Tray Connecting Strip WV 122, galvanized	B	26,–	9,–	35,–
BSW 124, galvanized	B	553,–	201,–	754,–
Access Ramp AR 122, galvanized	B	275,–	36,–	311,–
Access Ramp AR 123, galvanized	B	338,–	201,–	539,–
Access Corner Piece AE 124, galvanized	B	261,–	21,–	282,–
Cross-Shaped Connector KV 24, galvanized	B	20,–	8,–	28,–
Tray Connecting Strip WV 122, galvanized	B	26,–	9,–	35,–
Tray Connecting Strip WV 123, galvanized	B	36,–	9,–	45,–
BSW 125, galvanized	B	426,–	254,–	680,–
Access Ramp AR 121, galvanized	B	163,–	22,–	185,–
Access Ramp AR 124, galvanized	B	392,–	254,–	646,–
Access Corner Piece AE 124, galvanized	B	261,–	21,–	282,–

Prices in EUR, valid EXW DE-46354 Südlohn, DE-38820 Halberstadt, unpacked
Freight charges valid CPT Spain, islands and oversea territories excluded

BAUER GmbH
Eichendorffstr. 62
46354 Südlohn, Germany

Tel. +49 2862 70 90
info@bauer-suedlohn.com
www.bauer-suedlohn.com

Geschäftsführer
Patrick Bauer, Pascal Bauer
Amtsgericht Coesfeld HRB 5259

TÜVNORD
TÜV NORD CERT GmbH
DIN EN ISO 9001
tuev-nord.de

Price List 0726 en-ES
Environment / Storage

Ground Protection Spill Tray Type BSW	Category	Price	Freight charges	Price including freight charges
Cross-Shaped Connector KV 24, galvanized	B	20,–	8,–	28,–
Tray Connecting Strip WV 121, galvanized	B	21,–	9,–	30,–
Tray Connecting Strip WV 124, galvanized	B	49,–	9,–	58,–
BSW 126, galvanized	B	668,–	344,–	1012,–
Access Ramp AR 122, galvanized	B	275,–	36,–	311,–
Access Ramp AR 124, galvanized	B	392,–	254,–	646,–
Access Corner Piece AE 124, galvanized	B	261,–	21,–	282,–
Cross-Shaped Connector KV 24, galvanized	B	20,–	8,–	28,–
Tray Connecting Strip WV 122, galvanized	B	26,–	9,–	35,–
Tray Connecting Strip WV 124, galvanized	B	49,–	9,–	58,–

Polyethylene Bunded Spill Flooring Type BWP-PE	Category	Price	Freight charges	Price including freight charges
BWP-PE 150, made of robust polyethylene	B	316,–	130,–	446,–
Ramp Type BWR, robust polyethylene, black	B	222,–	12,–	234,–
Joining Element BWV 2, stainless steel 1.4301	B	29,–	9,–	38,–
BWP-PE 300, made of robust polyethylene	B	641,–	130,–	771,–
Ramp Type BWR, robust polyethylene, black	B	222,–	12,–	234,–
Joining Element BWV 4, stainless steel 1.4301	B	38,–	10,–	48,–

Polyethylene Bunded Spill Flooring Type BWPS-PE	Category	Price	Freight charges	Price including freight charges
BWPS-PE 300, made of robust polyethylene	B	786,–	182,–	968,–
Ramp Type BWR, robust polyethylene, black	B	222,–	12,–	234,–
Joining Element BWV 2, stainless steel 1.4301	B	29,–	9,–	38,–

Shelf Container Type CEH	Category	Price	Freight charges	Price including freight charges
CEH 29-2, painted	C	9142,–	on request	on request
CEH 29-2 IBC, painted	C	10076,–	on request	on request
CEH 36-2 IBC, painted	C	11727,–	on request	on request
CEH 38-2, painted	C	11719,–	on request	on request
CEH 59-2, painted	C	17352,–	on request	on request
CEH 59-2 IBC, painted	C	18629,–	on request	on request
CEH 75-2 IBC, painted	C	22081,–	on request	on request
CEH 81-2, painted	C	22524,–	on request	on request

Shelf Container Type CEN	Category	Price	Freight charges	Price including freight charges
CEN 29-2, painted	C	7714,–	on request	on request
Potential equalisation	C	184,–	0,–	184,–
CEN 29-2 IBC, painted	C	8421,–	on request	on request
Potential equalisation	C	184,–	0,–	184,–
CEN 29-2b, painted	C	13445,–	on request	on request
Potential equalisation	C	366,–	0,–	366,–
CEN 29-2b IBC, painted	C	14379,–	on request	on request
Potential equalisation	C	366,–	0,–	366,–
CEN 29-3, painted	C	12140,–	on request	on request
Potential equalisation	C	274,–	0,–	274,–

Prices in EUR, valid EXW DE-46354 Südlohn, DE-38820 Halberstadt, unpacked
Freight charges valid CPT Spain, islands and oversea territories excluded

BAUER GmbH
Eichendorffstr. 62
46354 Südlohn, Germany

Tel. +49 2862 70 90
info@bauer-suedlohn.com
www.bauer-suedlohn.com

Geschäftsführer
Patrick Bauer, Pascal Bauer
Amtsgericht Coesfeld HRB 5259

TÜVNORD
TÜV NORD CERT GmbH
DIN EN ISO 9001
tuev-nord.de

Price List 0726 en-ES
Environment / Storage

Shelf Container Type CEN	Category	Price	Freight charges	Price including freight charges
CEN 29-3 IBC, painted	C	12917,–	on request	on request
Potential equalisation	C	274,–	0,–	274,–
CEN 29-3b, painted	C	19757,–	on request	on request
Potential equalisation	C	546,–	0,–	546,–
CEN 29-3b IBC, painted	C	20862,–	on request	on request
Potential equalisation	C	546,–	0,–	546,–
CEN 33-2 IBC, painted	C	9393,–	on request	on request
Potential equalisation	C	184,–	0,–	184,–
CEN 33-2b IBC, painted	C	15740,–	on request	on request
Potential equalisation	C	366,–	0,–	366,–
CEN 33-3 IBC, painted	C	13849,–	on request	on request
Potential equalisation	C	274,–	0,–	274,–
CEN 33-3b IBC, painted	C	22018,–	on request	on request
Potential equalisation	C	546,–	0,–	546,–
CEN 36-2, painted	C	9470,–	on request	on request
Potential equalisation	C	184,–	0,–	184,–
CEN 36-2b, painted	C	16110,–	on request	on request
Potential equalisation	C	366,–	0,–	366,–
CEN 36-3, painted	C	14046,–	on request	on request
Potential equalisation	C	274,–	0,–	274,–
CEN 36-3b, painted	C	22693,–	on request	on request
Potential equalisation	C	546,–	0,–	546,–
CEN 59-2, painted	C	12772,–	on request	on request
Potential equalisation	C	365,–	0,–	365,–
CEN 59-2 IBC, painted	C	13917,–	on request	on request
Potential equalisation	C	365,–	0,–	365,–
CEN 59-2b, painted	C	21982,–	on request	on request
Potential equalisation	C	729,–	0,–	729,–
CEN 59-2b IBC, painted	C	22754,–	on request	on request
Potential equalisation	C	729,–	0,–	729,–
CEN 59-3, painted	C	19663,–	on request	on request
Potential equalisation	C	545,–	0,–	545,–
CEN 59-3 IBC, painted	C	20812,–	on request	on request
Potential equalisation	C	545,–	0,–	545,–
CEN 59-3b, painted	C	31741,–	on request	on request
Potential equalisation	C	1089,–	0,–	1089,–
CEN 59-3b IBC, painted	C	33404,–	on request	on request
Potential equalisation	C	1089,–	0,–	1089,–
CEN 65-2 IBC, painted	C	15002,–	on request	on request
Potential equalisation	C	365,–	0,–	365,–
CEN 65-2b IBC, painted	C	25299,–	on request	on request
Potential equalisation	C	729,–	0,–	729,–
CEN 65-3 IBC, painted	C	21999,–	on request	on request
Potential equalisation	C	545,–	0,–	545,–
CEN 65-3b IBC, painted	C	35919,–	on request	on request
Potential equalisation	C	1089,–	0,–	1089,–

Prices in EUR, valid EXW DE-46354 Südlohn, DE-38820 Halberstadt, unpacked
Freight charges valid CPT Spain, islands and oversea territories excluded

BAUER GmbH
Eichendorffstr. 62
46354 Südlohn, Germany

Tel. +49 2862 70 90
info@bauer-suedlohn.com
www.bauer-suedlohn.com

Geschäftsführer
Patrick Bauer, Pascal Bauer
Amtsgericht Coesfeld HRB 5259

TÜVNORD
TÜV NORD CERT GmbH
DIN EN ISO 9001
tuev-nord.de

Price List 0726 en-ES
Environment / Storage

Shelf Container Type CEN	Category	Price	Freight charges	Price including freight charges
CEN 75-2, painted	C	16004,–	on request	on request
Potential equalisation	C	365,–	0,–	365,–
CEN 75-2b, painted	C	26485,–	on request	on request
Potential equalisation	C	729,–	0,–	729,–
CEN 75-3, painted	C	23086,–	on request	on request
Potential equalisation	C	545,–	0,–	545,–
CEN 75-3b, painted	C	37480,–	on request	on request
Potential equalisation	C	1089,–	0,–	1089,–
CEN 81-2, painted	C	16788,–	on request	on request
Potential equalisation	C	365,–	0,–	365,–
CEN 81-2b, painted	C	27692,–	on request	on request
Potential equalisation	C	729,–	0,–	729,–
CEN 81-3, painted	C	24174,–	on request	on request
Potential equalisation	C	545,–	0,–	545,–
CEN 81-3b, painted	C	39119,–	on request	on request
Potential equalisation	C	1089,–	0,–	1089,–

Sump Tray for Skips Type CW	Category	Price	Freight charges	Price including freight charges
CW 1, painted	B	2952,–	on request	on request
CW 2, painted	B	3226,–	on request	on request
CW 3, painted	B	3722,–	on request	on request

Sump Tray Type ECO	Category	Price	Freight charges	Price including freight charges
ECO 1/200, painted	B	246,–	130,–	376,–
ECO 1/200, hot-dip galvanized	B	256,–	130,–	386,–
ECO 2/200, painted	B	261,–	130,–	391,–
ECO 2/200, hot-dip galvanized	B	270,–	130,–	400,–
ECO 4/200, painted	B	285,–	130,–	415,–
ECO 4/200, hot-dip galvanized	B	297,–	130,–	427,–
ECO 4/400, painted	B	354,–	130,–	484,–
ECO 4/400, hot-dip galvanized	B	370,–	130,–	500,–
ECO 1/1000, painted	B	632,–	201,–	833,–
ECO 1/1000, hot-dip galvanized	B	759,–	201,–	960,–
ECO 2/1000, painted	B	826,–	254,–	1080,–
ECO 2/1000, hot-dip galvanized	B	915,–	254,–	1169,–

Sump Tray Type ECO-A	Category	Price	Freight charges	Price including freight charges
ECO-A 1/1000, painted	B	831,–	201,–	1032,–
ECO-A 1/1000, hot-dip galvanized	B	971,–	201,–	1172,–
ECO-A 2/1000, painted	B	1221,–	344,–	1565,–
ECO-A 2/1000, hot-dip galvanized	B	1341,–	344,–	1685,–

Sump Tray Type ECO-S	Category	Price	Freight charges	Price including freight charges
ECO-S 2/200, hot-dip galvanized	B	3447,–	525,–	3972,–
ECO-S 4/200, hot-dip galvanized	B	4053,–	810,–	4863,–

Prices in EUR, valid EXW DE-46354 Südlohn, DE-38820 Halberstadt, unpacked
Freight charges valid CPT Spain, islands and oversea territories excluded

BAUER GmbH
Eichendorffstr. 62
46354 Südlohn, Germany

Tel. +49 2862 70 90
info@bauer-suedlohn.com
www.bauer-suedlohn.com

Geschäftsführer
Patrick Bauer, Pascal Bauer
Amtsgericht Coesfeld HRB 5259

TÜVNORD
TÜV NORD CERT GmbH
DIN EN ISO 9001
tuev-nord.de

Price List 0726 en-ES
Environment / Storage

Sump Tray Type ECO-S	Category	Price	Freight charges	Price including freight charges
ECO-S 4/400, hot-dip galvanized	B	5000,–	810,–	5810,–

Suspended Sump with Polyethylene Inlay Type EHW PE	Category	Price	Freight charges	Price including freight charges
EHW 1800 PE, painted	B	909,–	201,–	1110,–
EHW 1800 PE, hot-dip galvanized	B	922,–	201,–	1123,–
EHW 2200 PE, painted	B	987,–	201,–	1188,–
EHW 2200 PE, hot-dip galvanized	B	1028,–	201,–	1229,–
EHW 2700 PE, painted	B	1144,–	344,–	1488,–
EHW 2700 PE, hot-dip galvanized	B	1211,–	344,–	1555,–
EHW 3300 PE, painted	B	1653,–	344,–	1997,–
EHW 3300 PE, hot-dip galvanized	B	1727,–	344,–	2071,–

Suspended Sump Type EHW	Category	Price	Freight charges	Price including freight charges
EHW 1800, painted	B	509,–	201,–	710,–
EHW 1800, hot-dip galvanized	B	521,–	201,–	722,–
EHW 2200, painted	B	564,–	201,–	765,–
EHW 2200, hot-dip galvanized	B	605,–	201,–	806,–
EHW 2700, painted	B	648,–	254,–	902,–
EHW 2700, hot-dip galvanized	B	717,–	254,–	971,–
EHW 3300, painted	B	1002,–	346,–	1348,–
EHW 3300, hot-dip galvanized	B	1076,–	346,–	1422,–
EHW 3600, painted	B	1050,–	346,–	1396,–
EHW 3600, hot-dip galvanized	B	1131,–	346,–	1477,–

Drum Pallet Type FP	Category	Price	Freight charges	Price including freight charges
FP 2, hot-dip galvanized	B	92,–	130,–	222,–

Drum Shelve Type FR	Category	Price	Freight charges	Price including freight charges
FR-1, hot-dip galvanized	B	293,–	130,–	423,–
Can Stand Type GS, hot-dip galvanized	B	65,–	18,–	83,–
Clip-on Rotating Support, galvanized	B	85,–	10,–	95,–
FR-2, hot-dip galvanized	B	375,–	130,–	505,–
Can Stand Type GS, hot-dip galvanized	B	65,–	18,–	83,–
Clip-on Rotating Support, galvanized	B	85,–	10,–	95,–
FR-3, hot-dip galvanized	B	419,–	130,–	549,–
Can Stand Type GS, hot-dip galvanized	B	65,–	18,–	83,–
Rotating Support RA 60, hot-dip galvanized	B	97,–	9,–	106,–

Sump Tray Type FRA	Category	Price	Freight charges	Price including freight charges
FRA-1, painted	B	310,–	130,–	440,–
Grid, hot-dip galvanized	B	67,–	16,–	83,–
FRA-1, hot-dip galvanized	B	367,–	130,–	497,–
Grid, hot-dip galvanized	B	67,–	16,–	83,–
FRA-2, painted	B	322,–	130,–	452,–
Grid, hot-dip galvanized	B	132,–	24,–	156,–

Prices in EUR, valid EXW DE-46354 Südlohn, DE-38820 Halberstadt, unpacked
Freight charges valid CPT Spain, islands and oversea territories excluded

BAUER GmbH
Eichendorffstr. 62
46354 Südlohn, Germany

Tel. +49 2862 70 90
info@bauer-suedlohn.com
www.bauer-suedlohn.com

Geschäftsführer
Patrick Bauer, Pascal Bauer
Amtsgericht Coesfeld HRB 5259

TÜVNORD
TÜV NORD CERT GmbH
DIN EN ISO 9001
tuev-nord.de

Price List 0726 en-ES
Environment / Storage

Sump Tray Type FRA	Category	Price	Freight charges	Price including freight charges
FRA-2, hot-dip galvanized	B	378,–	130,–	508,–
Grid, hot-dip galvanized	B	132,–	24,–	156,–
FRA-3, painted	B	322,–	130,–	452,–
Grid, hot-dip galvanized	B	132,–	24,–	156,–
FRA-3, hot-dip galvanized	B	378,–	130,–	508,–
Grid, hot-dip galvanized	B	132,–	24,–	156,–

Drum Shelf Type FRE/M	Category	Price	Freight charges	Price including freight charges
FRE-1/M, hot-dip galvanized	B	225,–	21,–	246,–
Clip-on Rotating Support, galvanized	B	85,–	10,–	95,–
Can Stand Type GS, hot-dip galvanized	B	65,–	18,–	83,–
FRE-2/M, hot-dip galvanized	B	261,–	22,–	283,–
Clip-on Rotating Support, galvanized	B	85,–	10,–	95,–
Can Stand Type GS, hot-dip galvanized	B	65,–	18,–	83,–
FRE-3/M, hot-dip galvanized	B	279,–	27,–	306,–
Rotating Support RA 60, hot-dip galvanized	B	97,–	9,–	106,–
Can Stand Type GS, hot-dip galvanized	B	65,–	18,–	83,–

Can Shelf Type FRE-G/M	Category	Price	Freight charges	Price including freight charges
FRE-G1/M, hot-dip galvanized	B	236,–	27,–	263,–
FRE-G2/M, hot-dip galvanized	B	274,–	32,–	306,–

Can Shelf for Small Cans Type FRG	Category	Price	Freight charges	Price including freight charges
FRG, hot-dip galvanized	B	381,–	130,–	511,–

Drum Stacking Pallet Type FSP-D	Category	Price	Freight charges	Price including freight charges
FSP-1 D, lackiert	B	845,–	201,–	1046,–
FSP-1 D, hot-dip galvanized	B	1106,–	201,–	1307,–
FSP-2 D, lackiert	B	901,–	201,–	1102,–
FSP-2 D, hot-dip galvanized	B	1222,–	201,–	1423,–
FSP-4 D, lackiert	B	1170,–	201,–	1371,–
FSP-4 D, hot-dip galvanized	B	1615,–	201,–	1816,–

Drum Stacking Pallet Type FSP-G	Category	Price	Freight charges	Price including freight charges
FSP-1 G, lackiert	B	821,–	201,–	1022,–
FSP-1 G, hot-dip galvanized	B	1089,–	201,–	1290,–
FSP-2 G, painted	B	879,–	201,–	1080,–
FSP-2 G, hot-dip galvanized	B	1197,–	201,–	1398,–
FSP-4 G, painted	B	1148,–	291,–	1439,–
FSP-4 G, hot-dip galvanized	B	1587,–	291,–	1878,–

Drum Stacking Pallet Type FSP	Category	Price	Freight charges	Price including freight charges
FSP-1, painted	B	484,–	130,–	614,–
FSP-1, hot-dip galvanized	B	727,–	201,–	928,–
FSP-2, painted	B	655,–	201,–	856,–

Prices in EUR, valid EXW DE-46354 Südlohn, DE-38820 Halberstadt, unpacked
Freight charges valid CPT Spain, islands and oversea territories excluded

BAUER GmbH
Eichendorffstr. 62
46354 Südlohn, Germany

Tel. +49 2862 70 90
info@bauer-suedlohn.com
www.bauer-suedlohn.com

Geschäftsführer
Patrick Bauer, Pascal Bauer
Amtsgericht Coesfeld HRB 5259

TÜVNORD
TÜV NORD CERT GmbH
DIN EN ISO 9001
tuev-nord.de

Price List 0726 en-ES
Environment / Storage

Drum Stacking Pallet Type FSP	Category	Price	Freight charges	Price including freight charges
FSP-2, hot-dip galvanized	B	913,–	201,–	1114,–
FSP-4, painted	B	746,–	201,–	947,–
FSP-4, hot-dip galvanized	B	1151,–	201,–	1352,–

Hazardous Materials Depot Type GD-A	Category	Price	Freight charges	Price including freight charges
GD-A, painted	C	762,–	201,–	963,–
Drum Support FA 60-1, hot-dip galvanized	B	109,–	15,–	124,–
Drum Support FA 60-2, hot-dip galvanized	B	118,–	18,–	136,–
Drum Support FA 60-3, hot-dip galvanized	B	138,–	21,–	159,–
Can Shelf Type GR-A, galvanized	B	138,–	60,–	198,–
Can Shelf Type GR-B, galvanized	B	138,–	60,–	198,–
Can Shelf Type GR-C, galvanized	B	138,–	60,–	198,–
GD-A, hot-dip galvanized	C	960,–	201,–	1161,–
Drum Support FA 60-1, hot-dip galvanized	B	109,–	15,–	124,–
Drum Support FA 60-2, hot-dip galvanized	B	118,–	18,–	136,–
Drum Support FA 60-3, hot-dip galvanized	B	138,–	21,–	159,–
Can Shelf Type GR-A, galvanized	B	138,–	60,–	198,–
Can Shelf Type GR-B, galvanized	B	138,–	60,–	198,–
Can Shelf Type GR-C, galvanized	B	138,–	60,–	198,–

Hazardous Materials Depot Type GD-B	Category	Price	Freight charges	Price including freight charges
GD-B, painted	C	1363,–	201,–	1564,–
Drum Support FA 60-1, hot-dip galvanized	B	109,–	15,–	124,–
Drum Support FA 60-2, hot-dip galvanized	B	118,–	18,–	136,–
Drum Support FA 60-3, hot-dip galvanized	B	138,–	21,–	159,–
Can Shelf Type GR-A, galvanized	B	138,–	60,–	198,–
Can Shelf Type GR-B, galvanized	B	138,–	60,–	198,–
Can Shelf Type GR-C, galvanized	B	138,–	60,–	198,–
GD-B, hot-dip galvanized	C	1625,–	201,–	1826,–
Drum Support FA 60-1, hot-dip galvanized	B	109,–	15,–	124,–
Drum Support FA 60-2, hot-dip galvanized	B	118,–	18,–	136,–
Drum Support FA 60-3, hot-dip galvanized	B	138,–	21,–	159,–
Can Shelf Type GR-A, galvanized	B	138,–	60,–	198,–
Can Shelf Type GR-B, galvanized	B	138,–	60,–	198,–
Can Shelf Type GR-C, galvanized	B	138,–	60,–	198,–

Hazardous Materials Depot Type GD-C	Category	Price	Freight charges	Price including freight charges
GD-C, painted	C	1163,–	201,–	1364,–
Drum Support FA 60-1, hot-dip galvanized	B	109,–	15,–	124,–
Drum Support FA 60-2, hot-dip galvanized	B	118,–	18,–	136,–
Drum Support FA 60-3, hot-dip galvanized	B	138,–	21,–	159,–
Can Shelf Type GR-A, galvanized	B	138,–	60,–	198,–
Can Shelf Type GR-B, galvanized	B	138,–	60,–	198,–
Can Shelf Type GR-C, galvanized	B	138,–	60,–	198,–
GD-C, hot-dip galvanized	C	1314,–	201,–	1515,–

Prices in EUR, valid EXW DE-46354 Südlohn, DE-38820 Halberstadt, unpacked
Freight charges valid CPT Spain, islands and oversea territories excluded

BAUER GmbH
Eichendorffstr. 62
46354 Südlohn, Germany

Tel. +49 2862 70 90
info@bauer-suedlohn.com
www.bauer-suedlohn.com

Geschäftsführer
Patrick Bauer, Pascal Bauer
Amtsgericht Coesfeld HRB 5259

TÜVNORD
TÜV NORD CERT GmbH
DIN EN ISO 9001
tuev-nord.de

Price List 0726 en-ES
Environment / Storage

Hazardous Materials Depot Type GD-C	Category	Price	Freight charges	Price including freight charges
Drum Support FA 60-1, hot-dip galvanized	B	109,–	15,–	124,–
Drum Support FA 60-2, hot-dip galvanized	B	118,–	18,–	136,–
Drum Support FA 60-3, hot-dip galvanized	B	138,–	21,–	159,–
Can Shelf Type GR-A, galvanized	B	138,–	60,–	198,–
Can Shelf Type GR-B, galvanized	B	138,–	60,–	198,–
Can Shelf Type GR-C, galvanized	B	138,–	60,–	198,–

Hazardous Materials Depot Type GD-E	Category	Price	Freight charges	Price including freight charges
GD-E 2, galvanized	C	1562,–	291,–	1853,–
Drum Support FA 60-1, hot-dip galvanized	B	109,–	15,–	124,–
Drum Support FA 60-2, hot-dip galvanized	B	118,–	18,–	136,–
Drum Support FA 60-3, hot-dip galvanized	B	138,–	21,–	159,–
Can Shelf Type GR-A, galvanized	B	138,–	60,–	198,–
Can Shelf Type GR-B, galvanized	B	138,–	60,–	198,–
Can Shelf Type GR-C, galvanized	B	138,–	60,–	198,–
GD-E 4, galvanized	C	1907,–	357,–	2264,–
Drum Support FA 60-1, hot-dip galvanized	B	109,–	15,–	124,–
Drum Support FA 60-2, hot-dip galvanized	B	118,–	18,–	136,–
Drum Support FA 60-3, hot-dip galvanized	B	138,–	21,–	159,–
Can Shelf Type GR-A, galvanized	B	138,–	60,–	198,–
Can Shelf Type GR-B, galvanized	B	138,–	60,–	198,–
Can Shelf Type GR-C, galvanized	B	138,–	60,–	198,–

Hazardous Materials Depot Type GD-E/IBC	Category	Price	Freight charges	Price including freight charges
GD-E/IBC, galvanized	C	2367,–	995,–	3362,–
GD-E/IBC-2, galvanized	C	3552,–	426,–	3978,–

Hazardous Materials Depot Type GD-N	Category	Price	Freight charges	Price including freight charges
GD-N 2, galvanized	C	1362,–	291,–	1653,–
Intermediate Storage Level, hot-dip galvanized	C	106,–	18,–	124,–
Drum Support FA 60-1, hot-dip galvanized	B	109,–	15,–	124,–
Can Shelf Type GR-A, galvanized	B	138,–	60,–	198,–
Can Shelf Type GR-B, galvanized	B	138,–	60,–	198,–
Can Shelf Type GR-C, galvanized	B	138,–	60,–	198,–
GD-N 4, galvanized	C	1697,–	291,–	1988,–
Intermediate Storage Level, hot-dip galvanized	C	106,–	18,–	124,–
Drum Support FA 60-1, hot-dip galvanized	B	109,–	15,–	124,–
Drum Support FA 60-2, hot-dip galvanized	B	118,–	18,–	136,–
Drum Support FA 200-1, hot-dip galvanized	B	118,–	15,–	133,–
Drum Support FA 200-2, hot-dip galvanized	B	138,–	22,–	160,–
Can Shelf Type GR-A, galvanized	B	138,–	60,–	198,–
Can Shelf Type GR-B, galvanized	B	138,–	60,–	198,–
Can Shelf Type GR-C, galvanized	B	138,–	60,–	198,–

Prices in EUR, valid EXW DE-46354 Südlohn, DE-38820 Halberstadt, unpacked
Freight charges valid CPT Spain, islands and oversea territories excluded

BAUER GmbH
Eichendorffstr. 62
46354 Südlohn, Germany

Tel. +49 2862 70 90
info@bauer-suedlohn.com
www.bauer-suedlohn.com

Geschäftsführer
Patrick Bauer, Pascal Bauer
Amtsgericht Coesfeld HRB 5259

TÜVNORD
TÜV NORD CERT GmbH
DIN EN ISO 9001
tuev-nord.de

Price List 0726 en-ES
Environment / Storage

Hazardous Materials DepotType GD-N/R	Category	Price	Freight charges	Price including freight charges
GD-N/R 2, galvanized	C	1562,–	291,–	1853,–
Intermediate Storage Level, hot-dip galvanized	C	106,–	18,–	124,–
Drum Support FA 60-1, hot-dip galvanized	B	109,–	15,–	124,–
Can Shelf Type GR-A, galvanized	B	138,–	60,–	198,–
Can Shelf Type GR-B, galvanized	B	138,–	60,–	198,–
Can Shelf Type GR-C, galvanized	B	138,–	60,–	198,–
GD-N/R 4, galvanized	C	1901,–	291,–	2192,–
Intermediate Storage Level, hot-dip galvanized	C	106,–	18,–	124,–
Drum Support FA 60-1, hot-dip galvanized	B	109,–	15,–	124,–
Drum Support FA 60-2, hot-dip galvanized	B	118,–	18,–	136,–
Drum Support FA 200-1, hot-dip galvanized	B	118,–	15,–	133,–
Drum Support FA 200-2, hot-dip galvanized	B	138,–	22,–	160,–
Can Shelf Type GR-A, galvanized	B	138,–	60,–	198,–
Can Shelf Type GR-B, galvanized	B	138,–	60,–	198,–
Can Shelf Type GR-C, galvanized	B	138,–	60,–	198,–

Gas Cylinder Containers Type GFC-B	Category	Price	Freight charges	Price including freight charges
GFC-B M0, painted	B	3406,–	995,–	4401,–
Fixture with Safety Chain to Secure Gas Cylinders, hot-dip galvanized	B	72,–	12,–	84,–
Rack for Gas Cylinders GFG-2, galvanized	B	204,–	130,–	334,–
GFC-B M1, painted	B	3949,–	1182,–	5131,–
Fixture with Safety Chain to Secure Gas Cylinders, hot-dip galvanized	B	72,–	12,–	84,–
Rack for Gas Cylinders GFG-2, galvanized	B	204,–	130,–	334,–
GFC-B M2, painted	B	4114,–	1182,–	5296,–
Fixture with Safety Chain to Secure Gas Cylinders, hot-dip galvanized	B	72,–	12,–	84,–
Rack for Gas Cylinders GFG-2, galvanized	B	204,–	130,–	334,–
GFC-B M3, painted	B	4761,–	1182,–	5943,–
Fixture with Safety Chain to Secure Gas Cylinders, hot-dip galvanized	B	72,–	12,–	84,–
Rack for Gas Cylinders GFG-2, galvanized	B	204,–	130,–	334,–
GFC-B M4, painted	B	5355,–	1346,–	6701,–
Fixture with Safety Chain to Secure Gas Cylinders, hot-dip galvanized	B	72,–	12,–	84,–
Rack for Gas Cylinders GFG-2, galvanized	B	204,–	130,–	334,–
GFC-B M5, painted	B	7439,–	1346,–	8785,–
Fixture with Safety Chain to Secure Gas Cylinders, hot-dip galvanized	B	72,–	12,–	84,–
Rack for Gas Cylinders GFG-2, galvanized	B	204,–	130,–	334,–

Gas Cylinder Containers Type GFC-B/W	Category	Price	Freight charges	Price including freight charges
GFC-B/W M1, painted	B	4216,–	1182,–	5398,–
Fixture with Safety Chain to Secure Gas Cylinders, hot-dip galvanized	B	72,–	12,–	84,–
GFC-B/W M2, painted	B	4421,–	1182,–	5603,–
Fixture with Safety Chain to Secure Gas Cylinders, hot-dip galvanized	B	72,–	12,–	84,–
GFC-B/W M3, painted	B	5076,–	1182,–	6258,–
Fixture with Safety Chain to Secure Gas Cylinders, hot-dip galvanized	B	72,–	12,–	84,–
Rack for Gas Cylinders GFG-2, galvanized	B	204,–	130,–	334,–
GFC-B/W M4, painted	B	5675,–	1346,–	7021,–

Prices in EUR, valid EXW DE-46354 Südlohn, DE-38820 Halberstadt, unpacked
Freight charges valid CPT Spain, islands and oversea territories excluded

BAUER GmbH
Eichendorffstr. 62
46354 Südlohn, Germany

Tel. +49 2862 70 90
info@bauer-suedlohn.com
www.bauer-suedlohn.com

Geschäftsführer
Patrick Bauer, Pascal Bauer
Amtsgericht Coesfeld HRB 5259

TÜVNORD
TÜV NORD CERT GmbH
DIN EN ISO 9001
tuev-nord.de

Price List 0726 en-ES
Environment / Storage

Gas Cylinder Containers Type GFC-B/W	Category	Price	Freight charges	Price including freight charges
Fixture with Safety Chain to Secure Gas Cylinders, hot-dip galvanized	B	72,–	12,–	84,–
Rack for Gas Cylinders GFG-2, galvanized	B	204,–	130,–	334,–
GFC-B/W M5, painted	B	7844,–	1346,–	9190,–
Fixture with Safety Chain to Secure Gas Cylinders, hot-dip galvanized	B	72,–	12,–	84,–
Rack for Gas Cylinders GFG-2, galvanized	B	204,–	130,–	334,–

Gas Cylinder Containers Type GFC-E/G	Category	Price	Freight charges	Price including freight charges
GFC-E/G M0, hot-dip galvanized	B	1540,–	291,–	1831,–
Fixture with Safety Chain to Secure Gas Cylinders, hot-dip galvanized	B	40,–	12,–	52,–
Rack for Gas Cylinders GFG-2, galvanized	B	204,–	130,–	334,–
Access Ramp Type AR, galvanized	B	163,–	22,–	185,–
GFC-E/G M1, hot-dip galvanized	B	2191,–	1182,–	3373,–
Fixture with Safety Chain to Secure Gas Cylinders, hot-dip galvanized	B	40,–	12,–	52,–
Rack for Gas Cylinders GFG-2, galvanized	B	204,–	130,–	334,–
Access Ramp Type AR, galvanized	B	163,–	22,–	185,–
Central Dividing Wall, galvanized	B	87,–	22,–	109,–
GFC-E/G M2, hot-dip galvanized	B	2401,–	1182,–	3583,–
Fixture with Safety Chain to Secure Gas Cylinders, hot-dip galvanized	B	40,–	12,–	52,–
Rack for Gas Cylinders GFG-2, galvanized	B	204,–	130,–	334,–
Access Ramp Type AR, galvanized	B	163,–	22,–	185,–
Central Dividing Wall, galvanized	B	129,–	32,–	161,–
GFC-E/G M3, hot-dip galvanized	B	2671,–	1182,–	3853,–
Fixture with Safety Chain to Secure Gas Cylinders, hot-dip galvanized	B	40,–	12,–	52,–
Rack for Gas Cylinders GFG-2, galvanized	B	204,–	130,–	334,–
Access Ramp Type AR, galvanized	B	163,–	22,–	185,–
Central Dividing Wall, galvanized	B	129,–	32,–	161,–
GFC-E/G M4, hot-dip galvanized	B	2895,–	1346,–	4241,–
Fixture with Safety Chain to Secure Gas Cylinders, hot-dip galvanized	B	40,–	12,–	52,–
Rack for Gas Cylinders GFG-2, galvanized	B	204,–	130,–	334,–
Access Ramp Type AR, galvanized	B	163,–	22,–	185,–
Central Dividing Wall, galvanized	B	129,–	32,–	161,–
GFC-E/G M5, hot-dip galvanized	B	3587,–	1346,–	4933,–
Fixture with Safety Chain to Secure Gas Cylinders, hot-dip galvanized	B	40,–	12,–	52,–
Rack for Gas Cylinders GFG-2, galvanized	B	204,–	130,–	334,–
Access Ramp Type AR, galvanized	B	163,–	22,–	185,–
Central Dividing Wall, galvanized	B	191,–	40,–	231,–

Gas Cylinder Containers Type GFC-E/T	Category	Price	Freight charges	Price including freight charges
GFC-E/T M0, hot-dip galvanized	B	1560,–	291,–	1851,–
Fixture with Safety Chain to Secure Gas Cylinders, hot-dip galvanized	B	40,–	12,–	52,–
Rack for Gas Cylinders GFG-2, galvanized	B	204,–	130,–	334,–
Access Ramp Type AR, galvanized	B	163,–	22,–	185,–
GFC-E/T M1, hot-dip galvanized	B	2229,–	1182,–	3411,–
Fixture with Safety Chain to Secure Gas Cylinders, hot-dip galvanized	B	40,–	12,–	52,–
Rack for Gas Cylinders GFG-2, galvanized	B	204,–	130,–	334,–

Prices in EUR, valid EXW DE-46354 Südlohn, DE-38820 Halberstadt, unpacked
Freight charges valid CPT Spain, islands and oversea territories excluded

BAUER GmbH
Eichendorffstr. 62
46354 Südlohn, Germany

Tel. +49 2862 70 90
info@bauer-suedlohn.com
www.bauer-suedlohn.com

Geschäftsführer
Patrick Bauer, Pascal Bauer
Amtsgericht Coesfeld HRB 5259

TÜVNORD
TÜV NORD CERT GmbH
DIN EN ISO 9001
tuev-nord.de

Price List 0726 en-ES
Environment / Storage

Gas Cylinder Containers Type GFC-E/T	Category	Price	Freight charges	Price including freight charges
Access Ramp Type AR, galvanized	B	163,–	22,–	185,–
Central Dividing Wall, galvanized	B	87,–	22,–	109,–
GFC-E/T M2, hot-dip galvanized	B	2448,–	1182,–	3630,–
Fixture with Safety Chain to Secure Gas Cylinders, hot-dip galvanized	B	40,–	12,–	52,–
Rack for Gas Cylinders GFG-2, galvanized	B	204,–	130,–	334,–
Access Ramp Type AR, galvanized	B	163,–	22,–	185,–
Central Dividing Wall, galvanized	B	129,–	32,–	161,–
GFC-E/T M3, hot-dip galvanized	B	2737,–	1182,–	3919,–
Fixture with Safety Chain to Secure Gas Cylinders, hot-dip galvanized	B	40,–	12,–	52,–
Rack for Gas Cylinders GFG-2, galvanized	B	204,–	130,–	334,–
Access Ramp Type AR, galvanized	B	163,–	22,–	185,–
Central Dividing Wall, galvanized	B	129,–	32,–	161,–
GFC-E/T M4, hot-dip galvanized	B	2960,–	1346,–	4306,–
Fixture with Safety Chain to Secure Gas Cylinders, hot-dip galvanized	B	40,–	12,–	52,–
Rack for Gas Cylinders GFG-2, galvanized	B	204,–	130,–	334,–
Access Ramp Type AR, galvanized	B	163,–	22,–	185,–
Central Dividing Wall, galvanized	B	129,–	32,–	161,–
GFC-E/T M5, hot-dip galvanized	B	3678,–	1346,–	5024,–
Fixture with Safety Chain to Secure Gas Cylinders, hot-dip galvanized	B	40,–	12,–	52,–
Rack for Gas Cylinders GFG-2, galvanized	B	204,–	130,–	334,–
Access Ramp Type AR, galvanized	B	163,–	22,–	185,–
Central Dividing Wall, galvanized	B	191,–	40,–	231,–

Gas Cylinder Containers Type GFC-M/D	Category	Price	Freight charges	Price including freight charges
GFC-M0/D, hot-dip galvanized	B	1028,–	201,–	1229,–
Grid Floor, hot-dip galvanized	B	152,–	72,–	224,–
Fixture with Safety Chain to Secure Gas Cylinders, hot-dip galvanized	B	40,–	12,–	52,–
Rack for Gas Cylinders GFG-2, galvanized	B	204,–	130,–	334,–
GFC-M1/D, hot-dip galvanized	B	1247,–	291,–	1538,–
Grid Floor, hot-dip galvanized	B	274,–	130,–	404,–
Fixture with Safety Chain to Secure Gas Cylinders, hot-dip galvanized	B	40,–	12,–	52,–
Rack for Gas Cylinders GFG-2, galvanized	B	204,–	130,–	334,–
GFC-M2/D, hot-dip galvanized	B	1327,–	291,–	1618,–
Grid Floor, hot-dip galvanized	B	375,–	130,–	505,–
Fixture with Safety Chain to Secure Gas Cylinders, hot-dip galvanized	B	40,–	12,–	52,–
Rack for Gas Cylinders GFG-2, galvanized	B	204,–	130,–	334,–
GFC-M3/D, hot-dip galvanized	B	1498,–	291,–	1789,–
Grid Floor, hot-dip galvanized	B	510,–	201,–	711,–
Fixture with Safety Chain to Secure Gas Cylinders, hot-dip galvanized	B	40,–	12,–	52,–
Rack for Gas Cylinders GFG-2, galvanized	B	204,–	130,–	334,–
GFC-M4/D, hot-dip galvanized	B	1601,–	291,–	1892,–
Grid Floor, hot-dip galvanized	B	627,–	201,–	828,–
Fixture with Safety Chain to Secure Gas Cylinders, hot-dip galvanized	B	40,–	12,–	52,–
Rack for Gas Cylinders GFG-2, galvanized	B	204,–	130,–	334,–
GFC-M5/D, hot-dip galvanized	B	1903,–	357,–	2260,–
Grid Floor, hot-dip galvanized	B	765,–	201,–	966,–

Prices in EUR, valid EXW DE-46354 Südlohn, DE-38820 Halberstadt, unpacked
Freight charges valid CPT Spain, islands and oversea territories excluded

BAUER GmbH
Eichendorffstr. 62
46354 Südlohn, Germany

Tel. +49 2862 70 90
info@bauer-suedlohn.com
www.bauer-suedlohn.com

Geschäftsführer
Patrick Bauer, Pascal Bauer
Amtsgericht Coesfeld HRB 5259

TÜVNORD
TÜV NORD CERT GmbH
DIN EN ISO 9001
tuev-nord.de

Price List 0726 en-ES
Environment / Storage

Gas Cylinder Containers Type GFC-M/D	Category	Price	Freight charges	Price including freight charges
Fixture with Safety Chain to Secure Gas Cylinders, hot-dip galvanized	B	40,–	12,–	52,–
Rack for Gas Cylinders GFG-2, galvanized	B	204,–	130,–	334,–

Gas Cylinder Containers Type GFC-M	Category	Price	Freight charges	Price including freight charges
GFC-M1, hot-dip galvanized	B	1101,–	201,–	1302,–
Grid Floor, hot-dip galvanized	B	274,–	130,–	404,–
Fixture with Safety Chain to Secure Gas Cylinders, hot-dip galvanized	B	40,–	12,–	52,–
Rack for Gas Cylinders GFG-2, galvanized	B	204,–	130,–	334,–
GFC-M2, hot-dip galvanized	B	1169,–	291,–	1460,–
Grid Floor, hot-dip galvanized	B	375,–	130,–	505,–
Fixture with Safety Chain to Secure Gas Cylinders, hot-dip galvanized	B	40,–	12,–	52,–
Rack for Gas Cylinders GFG-2, galvanized	B	204,–	130,–	334,–
GFC-M3, hot-dip galvanized	B	1312,–	291,–	1603,–
Grid Floor, hot-dip galvanized	B	510,–	201,–	711,–
Fixture with Safety Chain to Secure Gas Cylinders, hot-dip galvanized	B	40,–	12,–	52,–
Rack for Gas Cylinders GFG-2, galvanized	B	204,–	130,–	334,–
GFC-M4, hot-dip galvanized	B	1380,–	291,–	1671,–
Grid Floor, hot-dip galvanized	B	627,–	201,–	828,–
Fixture with Safety Chain to Secure Gas Cylinders, hot-dip galvanized	B	40,–	12,–	52,–
Rack for Gas Cylinders GFG-2, galvanized	B	204,–	130,–	334,–
GFC-M5, hot-dip galvanized	B	1602,–	291,–	1893,–
Grid Floor, hot-dip galvanized	B	765,–	201,–	966,–
Fixture with Safety Chain to Secure Gas Cylinders, hot-dip galvanized	B	40,–	12,–	52,–
Rack for Gas Cylinders GFG-2, galvanized	B	204,–	130,–	334,–

Gas Cylinder Containers Type GFC-M/D-DF	Category	Price	Freight charges	Price including freight charges
GFC-M1/D-DF, hot-dip galvanized	B	1424,–	291,–	1715,–
Grid Floor, hot-dip galvanized	B	274,–	130,–	404,–
Fixture with Safety Chain to Secure Gas Cylinders, hot-dip galvanized	B	40,–	12,–	52,–
Rack for Gas Cylinders GFG-2, galvanized	B	204,–	130,–	334,–
GFC-M2/D-DF, hot-dip galvanized	B	1503,–	291,–	1794,–
Grid Floor, hot-dip galvanized	B	375,–	130,–	505,–
Fixture with Safety Chain to Secure Gas Cylinders, hot-dip galvanized	B	40,–	12,–	52,–
Rack for Gas Cylinders GFG-2, galvanized	B	204,–	130,–	334,–
GFC-M3/D-DF, hot-dip galvanized	B	1675,–	291,–	1966,–
Grid Floor, hot-dip galvanized	B	510,–	201,–	711,–
Fixture with Safety Chain to Secure Gas Cylinders, hot-dip galvanized	B	40,–	12,–	52,–
Rack for Gas Cylinders GFG-2, galvanized	B	204,–	130,–	334,–
GFC-M4/D-DF, hot-dip galvanized	B	1810,–	357,–	2167,–
Grid Floor, hot-dip galvanized	B	627,–	201,–	828,–
Fixture with Safety Chain to Secure Gas Cylinders, hot-dip galvanized	B	40,–	12,–	52,–
Rack for Gas Cylinders GFG-2, galvanized	B	204,–	130,–	334,–
GFC-M5/D-DF, hot-dip galvanized	B	2112,–	357,–	2469,–
Grid Floor, hot-dip galvanized	B	765,–	201,–	966,–
Fixture with Safety Chain to Secure Gas Cylinders, hot-dip galvanized	B	40,–	12,–	52,–

Prices in EUR, valid EXW DE-46354 Südlohn, DE-38820 Halberstadt, unpacked
Freight charges valid CPT Spain, islands and oversea territories excluded

BAUER GmbH
Eichendorffstr. 62
46354 Südlohn, Germany

Tel. +49 2862 70 90
info@bauer-suedlohn.com
www.bauer-suedlohn.com

Geschäftsführer
Patrick Bauer, Pascal Bauer
Amtsgericht Coesfeld HRB 5259

TÜVNORD
TÜV NORD CERT GmbH
DIN EN ISO 9001
tuev-nord.de

Price List 0726 en-ES
Environment / Storage

Gas Cylinder Containers Type GFC-M/D-DF	Category	Price	Freight charges	Price including freight charges
Rack for Gas Cylinders GFG-2, galvanized	B	204,–	130,–	334,–
GFC-M6/D-DF, hot-dip galvanized	B	2775,–	500,–	3275,–
Fixture with Safety Chain to Secure Gas Cylinders, hot-dip galvanized	B	40,–	12,–	52,–
Rack for Gas Cylinders GFG-2, galvanized	B	204,–	130,–	334,–

Gas Cylinder Containers Type GFC-M-DF	Category	Price	Freight charges	Price including freight charges
GFC-M1-DF, hot-dip galvanized	B	1276,–	201,–	1477,–
Grid Floor, hot-dip galvanized	B	274,–	130,–	404,–
Fixture with Safety Chain to Secure Gas Cylinders, hot-dip galvanized	B	40,–	12,–	52,–
Rack for Gas Cylinders GFG-2, galvanized	B	204,–	130,–	334,–
GFC-M2-DF, hot-dip galvanized	B	1346,–	291,–	1637,–
Grid Floor, hot-dip galvanized	B	375,–	130,–	505,–
Fixture with Safety Chain to Secure Gas Cylinders, hot-dip galvanized	B	40,–	12,–	52,–
Rack for Gas Cylinders GFG-2, galvanized	B	204,–	130,–	334,–
GFC-M3-DF, hot-dip galvanized	B	1490,–	291,–	1781,–
Grid Floor, hot-dip galvanized	B	510,–	201,–	711,–
Fixture with Safety Chain to Secure Gas Cylinders, hot-dip galvanized	B	40,–	12,–	52,–
Rack for Gas Cylinders GFG-2, galvanized	B	204,–	130,–	334,–
GFC-M4-DF, hot-dip galvanized	B	1591,–	291,–	1882,–
Grid Floor, hot-dip galvanized	B	627,–	201,–	828,–
Fixture with Safety Chain to Secure Gas Cylinders, hot-dip galvanized	B	40,–	12,–	52,–
Rack for Gas Cylinders GFG-2, galvanized	B	204,–	130,–	334,–
GFC-M5-DF, hot-dip galvanized	B	1812,–	357,–	2169,–
Grid Floor, hot-dip galvanized	B	765,–	201,–	966,–
Fixture with Safety Chain to Secure Gas Cylinders, hot-dip galvanized	B	40,–	12,–	52,–
Rack for Gas Cylinders GFG-2, galvanized	B	204,–	130,–	334,–

Gas Cylinder Depot Type GFD-G	Category	Price	Freight charges	Price including freight charges
GFD-G 1, galvanized	B	429,–	201,–	630,–
GFD-G 2, galvanized	B	790,–	201,–	991,–

Gas Cylinder Depot Type GFD-L	Category	Price	Freight charges	Price including freight charges
GFD-L 1, galvanized	B	462,–	130,–	592,–
GFD-L 2, galvanized	B	880,–	201,–	1081,–

Gas Cylinder Depot Type GFD-R	Category	Price	Freight charges	Price including freight charges
GFD-R 2, painted	B	774,–	130,–	904,–
GFD-R 2, hot-dip galvanized	B	798,–	130,–	928,–
GFD-R 4, painted	B	879,–	130,–	1009,–
GFD-R 4, hot-dip galvanized	B	909,–	130,–	1039,–

Hazardous Materials Cabinet Type GS	Category	Price	Freight charges	Price including freight charges
GS-1, painted	B	789,–	201,–	990,–
Intermediate Storage Level, galvanized	B	90,–	14,–	104,–
GS-1, hot-dip galvanized	B	849,–	201,–	1050,–

Prices in EUR, valid EXW DE-46354 Südlohn, DE-38820 Halberstadt, unpacked
Freight charges valid CPT Spain, islands and oversea territories excluded

BAUER GmbH
Eichendorffstr. 62
46354 Südlohn, Germany

Tel. +49 2862 70 90
info@bauer-suedlohn.com
www.bauer-suedlohn.com

Geschäftsführer
Patrick Bauer, Pascal Bauer
Amtsgericht Coesfeld HRB 5259

TÜVNORD
TÜV NORD CERT GmbH
DIN EN ISO 9001
tuev-nord.de

Price List 0726 en-ES
Environment / Storage

Hazardous Materials Cabinet Type GS	Category	Price	Freight charges	Price including freight charges
Intermediate Storage Level, galvanized	B	90,–	14,–	104,–
GS-2, painted	B	1049,–	291,–	1340,–
Intermediate Storage Level, galvanized	B	90,–	14,–	104,–
GS-2, hot-dip galvanized	B	1139,–	291,–	1430,–
Intermediate Storage Level, galvanized	B	90,–	14,–	104,–
GS-3, painted	B	2143,–	357,–	2500,–
GS-3, hot-dip galvanized	B	2295,–	357,–	2652,–
GS-4, painted	B	2154,–	995,–	3149,–
GS-4, hot-dip galvanized	B	2340,–	995,–	3335,–

Gas Cylinder Wall Bracket Type GWH	Category	Price	Freight charges	Price including freight charges
GWH 140-I, hot-dip galvanized	F	26,–	60,–	86,–
GWH 140-II, hot-dip galvanized	F	40,–	60,–	100,–
GWH 140-III, hot-dip galvanized	F	59,–	60,–	119,–
GWH 230-I, hot-dip galvanized	F	28,–	60,–	88,–
GWH 230-II, hot-dip galvanized	F	43,–	60,–	103,–
GWH 230-III, hot-dip galvanized	F	65,–	60,–	125,–
GWH 320-I, hot-dip galvanized	F	29,–	60,–	89,–
GWH 320-II, hot-dip galvanized	F	48,–	60,–	108,–
GWH 320-III, hot-dip galvanized	F	72,–	60,–	132,–

Tilting Canister Stand Type KAH	Category	Price	Freight charges	Price including freight charges
KAH-5, galvanized	A	96,–	60,–	156,–
KAH-25, galvanized	A	109,–	60,–	169,–
KAH-60, galvanized	A	140,–	60,–	200,–

Spill Tray for Canisters/Small Cans Type KGW	Category	Price	Freight charges	Price including freight charges
KGW 1, galvanized	B	92,–	60,–	152,–
KGW 1 V4A, stainless steel 1.4571	B	280,–	60,–	340,–
KGW 2, galvanized	B	96,–	60,–	156,–
KGW 2 V4A, stainless steel 1.4571	B	322,–	60,–	382,–
KGW 3, galvanized	B	100,–	60,–	160,–
KGW 3 V4A, stainless steel 1.4571	B	400,–	60,–	460,–
KGW 4, galvanized	B	117,–	130,–	247,–
KGW 4 V4A, stainless steel 1.4571	B	472,–	130,–	602,–
KGW 5, galvanized	B	161,–	130,–	291,–
KGW 5 V4A, stainless steel 1.4571	B	614,–	130,–	744,–

Spill Tray for Canisters/Small Cans Type KGW/M	Category	Price	Freight charges	Price including freight charges
KGW 1/M, galvanized	B	129,–	60,–	189,–
KGW 1/M V4A, stainless steel 1.4571	B	421,–	60,–	481,–
KGW 2/M, galvanized	B	137,–	60,–	197,–
KGW 2/M V4A, stainless steel 1.4571	B	485,–	60,–	545,–
KGW 3/M, galvanized	B	157,–	60,–	217,–
KGW 3/M V4A, stainless steel 1.4571	B	610,–	60,–	670,–

Prices in EUR, valid EXW DE-46354 Südlohn, DE-38820 Halberstadt, unpacked
Freight charges valid CPT Spain, islands and oversea territories excluded

BAUER GmbH
Eichendorffstr. 62
46354 Südlohn, Germany

Tel. +49 2862 70 90
info@bauer-suedlohn.com
www.bauer-suedlohn.com

Geschäftsführer
Patrick Bauer, Pascal Bauer
Amtsgericht Coesfeld HRB 5259

TÜVNORD
TÜV NORD CERT GmbH
DIN EN ISO 9001
tuev-nord.de

Price List 0726 en-ES
Environment / Storage

Spill Tray for Canisters/Small Cans Type KGW/M	Category	Price	Freight charges	Price including freight charges
KGW 4/M, galvanized	B	182,–	130,–	312,–
KGW 4/M V4A, stainless steel 1.4571	B	730,–	130,–	860,–
KGW 5/M, galvanized	B	235,–	130,–	365,–
KGW 5/M V4A, stainless steel 1.4571	B	962,–	130,–	1092,–

Spill Tray for Canisters/Small Cans on Pallets Type KGW-P	Category	Price	Freight charges	Price including freight charges
KGW-P 1, galvanized	B	98,–	60,–	158,–
KGW-P 1 V4A, stainless steel 1.4571	B	276,–	60,–	336,–
KGW-P 2, galvanized	B	147,–	60,–	207,–
KGW-P 2 V4A, stainless steel 1.4571	B	396,–	60,–	456,–
KGW-P 3, galvanized	B	185,–	130,–	315,–
KGW-P 3 V4A, stainless steel 1.4571	B	607,–	60,–	667,–
KGW-P 4, galvanized	B	175,–	60,–	235,–
KGW-P 4 V4A, stainless steel 1.4571	B	466,–	60,–	526,–

Spill Tray for Canisters/Small Cans on Pallets Type KGW-P/M	Category	Price	Freight charges	Price including freight charges
KGW-P 1/M, galvanized	B	142,–	60,–	202,–
KGW-P 1/M V4A, stainless steel 1.4571	B	399,–	60,–	459,–
KGW-P 2/M, galvanized	B	218,–	60,–	278,–
KGW-P 2/M V4A, stainless steel 1.4571	B	579,–	60,–	639,–
KGW-P 3/M, galvanized	B	265,–	130,–	395,–
KGW-P 3/M V4A, stainless steel 1.4571	B	895,–	130,–	1025,–
KGW-P 4/M, galvanized	B	250,–	130,–	380,–
KGW-P 4/M V4A, stainless steel 1.4571	B	719,–	60,–	779,–

Diesel Filling Point Type KPS	Category	Price	Freight charges	Price including freight charges
KPS 1, painted	B	2966,–	on request	on request
KPS 2, painted	B	3854,–	on request	on request
KPS 3, painted	B	5432,–	on request	on request

Polyethylene Sump Tray for Pallets Type KWP-P	Category	Price	Freight charges	Price including freight charges
KWP-P 20, made of robust polyethylene	B	48,–	60,–	108,–
Deck with Punched Holes LR-PE 20, robust polyethylene, black	B	64,–	14,–	78,–
KWP-P 30, made of robust polyethylene	B	58,–	60,–	118,–
Deck with Punched Holes LR-PE 30, robust polyethylene, black	B	66,–	14,–	80,–
KWP-P 40, made of robust polyethylene	B	65,–	60,–	125,–
Deck with Punched Holes LR-PE 40, robust polyethylene, black	B	70,–	14,–	84,–
KWP-P 60, made of robust polyethylene	B	103,–	60,–	163,–
Deck with punched holes LR-PE 60, robust polyethylene, black	B	73,–	14,–	87,–
KWP-P 100, made of robust polyethylene	B	117,–	130,–	247,–
Deck with punched holes LR-PE 100, robust polyethylene, black	B	90,–	16,–	106,–

Mobile Sump Tray with Perforated Panel Type LPW	Category	Price	Freight charges	Price including freight charges
LPW 60-1, painted	B	627,–	130,–	757,–
Tool Deposit	B	32,–	16,–	48,–

Prices in EUR, valid EXW DE-46354 Südlohn, DE-38820 Halberstadt, unpacked
Freight charges valid CPT Spain, islands and oversea territories excluded

BAUER GmbH
Eichendorffstr. 62
46354 Südlohn, Germany

Tel. +49 2862 70 90
info@bauer-suedlohn.com
www.bauer-suedlohn.com

Geschäftsführer
Patrick Bauer, Pascal Bauer
Amtsgericht Coesfeld HRB 5259

TÜVNORD
TÜV NORD CERT GmbH
DIN EN ISO 9001
tuev-nord.de

Price List 0726 en-ES
Environment / Storage

Mobile Sump Tray with Perforated Panel Type LPW	Category	Price	Freight charges	Price including freight charges
Drip Tray	B	50,–	16,–	66,–
LPW 60-1, hot-dip galvanized	B	645,–	130,–	775,–
Tool Deposit	B	32,–	16,–	48,–
Drip Tray	B	50,–	16,–	66,–
LPW 60-2, painted	B	640,–	130,–	770,–
Tool Deposit	B	32,–	16,–	48,–
Drip Tray	B	50,–	16,–	66,–
LPW 60-2, hot-dip galvanized	B	661,–	130,–	791,–
Tool Deposit	B	32,–	16,–	48,–
Drip Tray	B	50,–	16,–	66,–
LPW 60-3, painted	B	646,–	130,–	776,–
Tool Deposit	B	32,–	16,–	48,–
Drip Tray	B	50,–	16,–	66,–
LPW 60-3, hot-dip galvanized	B	667,–	130,–	797,–
Tool Deposit	B	32,–	16,–	48,–
Drip Tray	B	50,–	16,–	66,–
LPW 200-1, painted	B	822,–	201,–	1023,–
Tool Deposit	B	32,–	16,–	48,–
Drip Tray	B	50,–	16,–	66,–
LPW 200-1, hot-dip galvanized	B	856,–	201,–	1057,–
Tool Deposit	B	32,–	16,–	48,–
Drip Tray	B	50,–	16,–	66,–
LPW 200-2, painted	B	863,–	201,–	1064,–
Tool Deposit	B	32,–	16,–	48,–
Drip Tray	B	50,–	16,–	66,–
LPW 200-2, hot-dip galvanized	B	899,–	201,–	1100,–
Tool Deposit	B	32,–	16,–	48,–
Drip Tray	B	50,–	16,–	66,–
LPW 200-3, painted	B	878,–	201,–	1079,–
Tool Deposit	B	32,–	16,–	48,–
Drip Tray	B	50,–	16,–	66,–
LPW 200-3, hot-dip galvanized	B	914,–	201,–	1115,–
Tool Deposit	B	32,–	16,–	48,–
Drip Tray	B	50,–	16,–	66,–
LPW 200-4, painted	B	1055,–	201,–	1256,–
LPW 200-4, hot-dip galvanized	B	1086,–	201,–	1287,–

Modular Sump Tray Type MAW	Category	Price	Freight charges	Price including freight charges
MAW, painted	B	336,–	130,–	466,–
MAW, hot-dip galvanized	B	366,–	130,–	496,–
Element No. 1: grid grate incl. supporTS, painted	B	78,–	18,–	96,–
Element No. 2: galvanized handle + castors	B	138,–	19,–	157,–
Element No. 3: runners, painted	B	103,–	15,–	118,–
Element No. 3: runners, hot-dip galvanized	B	66,–	15,–	81,–
Element No. 6: surround, galvanized	B	601,–	130,–	731,–

Prices in EUR, valid EXW DE-46354 Südlohn, DE-38820 Halberstadt, unpacked
Freight charges valid CPT Spain, islands and oversea territories excluded

BAUER GmbH
Eichendorffstr. 62
46354 Südlohn, Germany

Tel. +49 2862 70 90
info@bauer-suedlohn.com
www.bauer-suedlohn.com

Geschäftsführer
Patrick Bauer, Pascal Bauer
Amtsgericht Coesfeld HRB 5259

TÜVNORD
TÜV NORD CERT GmbH
DIN EN ISO 9001
tuev-nord.de

Price List 0726 en-ES
Environment / Storage

Spline Sump Type PW	Category	Price	Freight charges	Price including freight charges
PW 200-2, painted	B	245,–	130,–	375,–
PW 200-2, hot-dip galvanized	B	235,–	130,–	365,–
PW 200-4, painted	B	271,–	130,–	401,–
PW 200-4, hot-dip galvanized	B	261,–	130,–	391,–
PW 400-4, painted	B	349,–	130,–	479,–
PW 400-4, hot-dip galvanized	B	332,–	130,–	462,–

Spline Sump Type PWE	Category	Price	Freight charges	Price including freight charges
PWE 200-2, painted	B	217,–	130,–	347,–
PWE 200-2, hot-dip galvanized	B	207,–	130,–	337,–
PWE 200-4, painted	B	236,–	130,–	366,–
PWE 200-4, hot-dip galvanized	B	228,–	130,–	358,–
PWE 400-4, painted	B	288,–	130,–	418,–
PWE 400-4, hot-dip galvanized	B	278,–	130,–	408,–

Hazardous Materials Cabinet with Roller Shutter Door Type RSG	Category	Price	Freight charges	Price including freight charges
RSG-1, painted	B	1906,–	201,–	2107,–
Set of 4 Feet, height adjustable	B	80,–	9,–	89,–
RSG-2, painted	B	1920,–	201,–	2121,–
Set of 4 Feet, height adjustable	B	80,–	9,–	89,–
RSG-3, painted	B	1971,–	201,–	2172,–
Set of 4 Feet, height adjustable	B	80,–	9,–	89,–
RSG-4, painted	B	2109,–	291,–	2400,–
Set of 4 Feet, height adjustable	B	80,–	9,–	89,–

Shelf Sump with Polyethylene Inlay Type RW PE	Category	Price	Freight charges	Price including freight charges
RW 1800 PE, painted	B	1044,–	201,–	1245,–
RW 1800 PE, hot-dip galvanized	B	1100,–	201,–	1301,–
RW 2200-1 PE, painted	B	1089,–	201,–	1290,–
RW 2200-1 PE, hot-dip galvanized	B	1147,–	201,–	1348,–
RW 2200-2 PE, painted	B	1276,–	201,–	1477,–
RW 2200-2 PE, hot-dip galvanized	B	1341,–	201,–	1542,–
RW 2700-1 PE, painted	B	1108,–	254,–	1362,–
RW 2700-1 PE, hot-dip galvanized	B	1192,–	254,–	1446,–
RW 2700-2 PE, painted	B	1266,–	254,–	1520,–
RW 2700-2 PE, hot-dip galvanized	B	1365,–	254,–	1619,–
RW 2700-3 PE, painted	B	1466,–	254,–	1720,–
RW 2700-3 PE, hot-dip galvanized	B	1592,–	254,–	1846,–
RW 3300-1 PE, painted	B	1417,–	254,–	1671,–
RW 3300-1 PE, hot-dip galvanized	B	1510,–	254,–	1764,–
RW 3300-2 PE, painted	B	1535,–	254,–	1789,–
RW 3300-2 PE, hot-dip galvanized	B	1637,–	254,–	1891,–
RW 3300-3 PE, painted	B	1738,–	344,–	2082,–
RW 3300-3 PE, hot-dip galvanized	B	1850,–	344,–	2194,–

Prices in EUR, valid EXW DE-46354 Südlohn, DE-38820 Halberstadt, unpacked
Freight charges valid CPT Spain, islands and oversea territories excluded

BAUER GmbH
Eichendorffstr. 62
46354 Südlohn, Germany

Tel. +49 2862 70 90
info@bauer-suedlohn.com
www.bauer-suedlohn.com

Geschäftsführer
Patrick Bauer, Pascal Bauer
Amtsgericht Coesfeld HRB 5259

TÜVNORD
TÜV NORD CERT GmbH
DIN EN ISO 9001
tuev-nord.de

Price List 0726 en-ES
Environment / Storage

Shelf Sump Type RW	Category	Price	Freight charges	Price including freight charges
RW 1800, painted	B	507,–	130,–	637,–
RW 1800, hot-dip galvanized	B	561,–	130,–	691,–
RW 2200-1, painted	B	519,–	130,–	649,–
RW 2200-1, hot-dip galvanized	B	577,–	130,–	707,–
RW 2200-2, painted	B	532,–	201,–	733,–
RW 2200-2, hot-dip galvanized	B	597,–	201,–	798,–
RW 2700-1, painted	B	528,–	254,–	782,–
RW 2700-1, hot-dip galvanized	B	611,–	254,–	865,–
RW 2700-2, painted	B	607,–	254,–	861,–
RW 2700-2, hot-dip galvanized	B	706,–	254,–	960,–
RW 2700-3, painted	B	657,–	254,–	911,–
RW 2700-3, hot-dip galvanized	B	781,–	254,–	1035,–
RW 3300-1, painted	B	680,–	254,–	934,–
RW 3300-1, hot-dip galvanized	B	774,–	254,–	1028,–
RW 3300-2, painted	B	748,–	254,–	1002,–
RW 3300-2, hot-dip galvanized	B	850,–	254,–	1104,–
RW 3300-3, painted	B	834,–	254,–	1088,–
RW 3300-3, hot-dip galvanized	B	945,–	254,–	1199,–

Shelf Sump with Polyethylene Inlay Type RW-GR PE	Category	Price	Freight charges	Price including freight charges
RW-GR 1800 PE, painted	B	1178,–	201,–	1379,–
RW-GR 1800 PE, hot-dip galvanized	B	1231,–	201,–	1432,–
RW-GR 2200-1 PE, painted	B	1255,–	201,–	1456,–
RW-GR 2200-1 PE, hot-dip galvanized	B	1313,–	201,–	1514,–
RW-GR 2200-2 PE, painted	B	1443,–	291,–	1734,–
RW-GR 2200-2 PE, hot-dip galvanized	B	1505,–	291,–	1796,–
RW-GR 2700-1 PE, painted	B	1313,–	344,–	1657,–
RW-GR 2700-1 PE, hot-dip galvanized	B	1395,–	344,–	1739,–
RW-GR 2700-2 PE, painted	B	1469,–	344,–	1813,–
RW-GR 2700-2 PE, hot-dip galvanized	B	1570,–	344,–	1914,–
RW-GR 2700-3 PE, painted	B	1671,–	344,–	2015,–
RW-GR 2700-3 PE, hot-dip galvanized	B	1776,–	344,–	2120,–
RW-GR 3300-1 PE, painted	B	1790,–	344,–	2134,–
RW-GR 3300-1 PE, hot-dip galvanized	B	1882,–	344,–	2226,–
RW-GR 3300-2 PE, painted	B	1906,–	344,–	2250,–
RW-GR 3300-2 PE, hot-dip galvanized	B	2018,–	344,–	2362,–
RW-GR 3300-3 PE, painted	B	2110,–	410,–	2520,–
RW-GR 3300-3 PE, hot-dip galvanized	B	2222,–	410,–	2632,–
RW-GR 3600-3 PE, painted	B	2428,–	423,–	2851,–
RW-GR 3600-3 PE, hot-dip galvanized	B	2580,–	423,–	3003,–

Shelf Sump Type RW-GR	Category	Price	Freight charges	Price including freight charges
RW-GR 1800, painted	B	641,–	201,–	842,–
RW-GR 1800, hot-dip galvanized	B	696,–	201,–	897,–
RW-GR 2200-1, painted	B	686,–	201,–	887,–

Prices in EUR, valid EXW DE-46354 Südlohn, DE-38820 Halberstadt, unpacked
Freight charges valid CPT Spain, islands and oversea territories excluded

BAUER GmbH
Eichendorffstr. 62
46354 Südlohn, Germany

Tel. +49 2862 70 90
info@bauer-suedlohn.com
www.bauer-suedlohn.com

Geschäftsführer
Patrick Bauer, Pascal Bauer
Amtsgericht Coesfeld HRB 5259

TÜVNORD
TÜV NORD CERT GmbH
DIN EN ISO 9001
tuev-nord.de

Price List 0726 en-ES
Environment / Storage

Shelf Sump Type RW-GR	Category	Price	Freight charges	Price including freight charges
RW-GR 2200-1, hot-dip galvanized	B	745,–	201,–	946,–
RW-GR 2200-2, painted	B	700,–	291,–	991,–
RW-GR 2200-2, hot-dip galvanized	B	761,–	291,–	1052,–
RW-GR 2700-1, painted	B	732,–	254,–	986,–
RW-GR 2700-1, hot-dip galvanized	B	815,–	344,–	1159,–
RW-GR 2700-2, painted	B	811,–	344,–	1155,–
RW-GR 2700-2, hot-dip galvanized	B	911,–	344,–	1255,–
RW-GR 2700-3, painted	B	861,–	344,–	1205,–
RW-GR 2700-3, hot-dip galvanized	B	966,–	344,–	1310,–
RW-GR 3300-1, painted	B	1052,–	344,–	1396,–
RW-GR 3300-1, hot-dip galvanized	B	1146,–	344,–	1490,–
RW-GR 3300-2, painted	B	1119,–	344,–	1463,–
RW-GR 3300-2, hot-dip galvanized	B	1230,–	344,–	1574,–
RW-GR 3300-3, painted	B	1206,–	344,–	1550,–
RW-GR 3300-3, hot-dip galvanized	B	1317,–	344,–	1661,–
RW-GR 3600-3, painted	B	1330,–	344,–	1674,–
RW-GR 3600-3, hot-dip galvanized	B	1483,–	344,–	1827,–

Safety Cabinet Type SIW	Category	Price	Freight charges	Price including freight charges
SIW 1005	B	596,–	130,–	726,–
SIW 2005	B	751,–	201,–	952,–

Diesel Filling Point Type TAW	Category	Price	Freight charges	Price including freight charges
TAW 1, painted	B	2448,–	on request	on request
TAW 2, painted	B	3195,–	on request	on request
TAW 3, painted	B	4603,–	on request	on request

Environmental Shelve Type UR	Category	Price	Freight charges	Price including freight charges
UR-G 2200, painted	B	1827,–	350,–	2177,–
Grid Set, hot-dip galvanized	B	198,–	130,–	328,–
Crash Guard	B	75,–	9,–	84,–
UR-G 2700, painted	B	1968,–	350,–	2318,–
Grid Set, hot-dip galvanized	B	245,–	130,–	375,–
Crash Guard	B	75,–	9,–	84,–
UR-G 3300, painted	B	2749,–	410,–	3159,–
Grid Set, hot-dip galvanized	B	297,–	130,–	427,–
Crash Guard	B	75,–	9,–	84,–
UR-A 2200, painted	B	1395,–	350,–	1745,–
Grid Set, hot-dip galvanized	B	198,–	130,–	328,–
Crash Guard	B	75,–	9,–	84,–
UR-A 2700, painted	B	1535,–	350,–	1885,–
Grid Set, hot-dip galvanized	B	245,–	130,–	375,–
Crash Guard	B	75,–	9,–	84,–
UR-A 3300, painted	B	2317,–	410,–	2727,–
Grid Set, hot-dip galvanized	B	297,–	130,–	427,–

Prices in EUR, valid EXW DE-46354 Südlohn, DE-38820 Halberstadt, unpacked
Freight charges valid CPT Spain, islands and oversea territories excluded

BAUER GmbH
Eichendorffstr. 62
46354 Südlohn, Germany

Tel. +49 2862 70 90
info@bauer-suedlohn.com
www.bauer-suedlohn.com

Geschäftsführer
Patrick Bauer, Pascal Bauer
Amtsgericht Coesfeld HRB 5259

TÜVNORD
TÜV NORD CERT GmbH
DIN EN ISO 9001
tuev-nord.de

Price List 0726 en-ES
Environment / Storage

Environmental Shelve Type UR	Category	Price	Freight charges	Price including freight charges
Crash Guard	B	75,–	9,–	84,–

Stainless Steel Sump Tray Type VAW	Category	Price	Freight charges	Price including freight charges
VAW-1, stainless steel 1.4571	B	990,–	130,–	1120,–
Grid, stainless steel 1.4571	B	494,–	14,–	508,–
Grid, hot-dip galvanized	B	71,–	14,–	85,–
VAW-2, stainless steel 1.4571	B	1079,–	130,–	1209,–
Grid, stainless steel 1.4571	B	731,–	16,–	747,–
Grid, hot-dip galvanized	B	95,–	38,–	133,–
VAW-4/A, stainless steel 1.4571	B	1236,–	130,–	1366,–
Grid, stainless steel 1.4571	B	1061,–	22,–	1083,–
Grid, hot-dip galvanized	B	124,–	22,–	146,–
VAW-4/B, stainless steel 1.4571	B	1511,–	130,–	1641,–
Grid, stainless steel 1.4571	B	1461,–	27,–	1488,–
Grid, hot-dip galvanized	B	169,–	27,–	196,–
VAW 1000 (Stainless Steel Grid), stainless steel 1.4571	B	3909,–	229,–	4138,–
VAW 1000 (Hot-dip Galvanized Grid), stainless steel 1.4571	B	2868,–	229,–	3097,–
VAW 1000-2 (Stainless Steel Grid), stainless steel 1.4571	B	5472,–	384,–	5856,–
VAW 1000-2 (Hot-dip Galvanized Grid), stainless steel 1.4571	B	3561,–	384,–	3945,–

Heating Chamber Type WK	Category	Price	Freight charges	Price including freight charges
WK 29-2 E65, painted	C	30688,–	on request	on request
WK 29-2 E85, painted	C	30859,–	on request	on request
WK 57-2 E65, painted	C	43080,–	on request	on request
WK 57-2 E85, painted	C	45540,–	on request	on request

Sump Tray Type WM	Category	Price	Freight charges	Price including freight charges
WM-2/200, hot-dip galvanized	B	290,–	130,–	420,–
Drum Support FA 60-1, hot-dip galvanized	B	109,–	15,–	124,–
Drum Support FA 60-2, hot-dip galvanized	B	118,–	18,–	136,–
Drum Support FA 60-3, hot-dip galvanized	B	138,–	21,–	159,–
Drum Support FA 200-1, hot-dip galvanized	B	118,–	15,–	133,–
Can Shelf Type GR-A, galvanized	B	138,–	60,–	198,–
Can Shelf Type GR-B, galvanized	B	138,–	60,–	198,–
Can Shelf Type GR-C, galvanized	B	138,–	60,–	198,–
WM-4/200, hot-dip galvanized	B	330,–	130,–	460,–
Drum Support FA 60-1, hot-dip galvanized	B	109,–	15,–	124,–
Drum Support FA 60-2, hot-dip galvanized	B	118,–	18,–	136,–
Drum Support FA 60-3, hot-dip galvanized	B	138,–	21,–	159,–
Drum Support FA 200-1, hot-dip galvanized	B	118,–	15,–	133,–
Drum Support FA 200-2, hot-dip galvanized	B	138,–	22,–	160,–
Can Shelf Type GR-A, galvanized	B	138,–	60,–	198,–
Can Shelf Type GR-B, galvanized	B	138,–	60,–	198,–
Can Shelf Type GR-C, galvanized	B	138,–	60,–	198,–
WM-4/400, hot-dip galvanized	B	396,–	201,–	597,–

Prices in EUR, valid EXW DE-46354 Südlohn, DE-38820 Halberstadt, unpacked
Freight charges valid CPT Spain, islands and oversea territories excluded

BAUER GmbH
Eichendorffstr. 62
46354 Südlohn, Germany

Tel. +49 2862 70 90
info@bauer-suedlohn.com
www.bauer-suedlohn.com

Geschäftsführer
Patrick Bauer, Pascal Bauer
Amtsgericht Coesfeld HRB 5259

TÜVNORD
TÜV NORD CERT GmbH
DIN EN ISO 9001
tuev-nord.de

Price List 0726 en-ES
Environment / Storage

Sump Tray Type WO	Category	Price	Freight charges	Price including freight charges
WO-2/200, hot-dip galvanized	B	221,–	130,–	351,–
WO-4/200, hot-dip galvanized	B	240,–	130,–	370,–
WO-4/400, hot-dip galvanized	B	309,–	130,–	439,–

Polyethylene Sump Pallet Type WP	Category	Price	Freight charges	Price including freight charges
WP 1/11, made of robust polyethylene	B	1089,–	130,–	1219,–
WP 2/11, made of robust polyethylene	B	1377,–	130,–	1507,–
Dispensing Tray VB 2, robust polyethylene, blue	B	158,–	60,–	218,–

Polyethylene Sump Pallet Type WPA-PE	Category	Price	Freight charges	Price including freight charges
WPA-PE 2/2, made of robust polyethylene	B	324,–	130,–	454,–
WPA-PE 4/2, made of robust polyethylene	B	512,–	130,–	642,–

Polyethylene Sump Pallet Type WP-PE	Category	Price	Freight charges	Price including freight charges
WP-PE 1/11, made of robust polyethylene	B	1179,–	130,–	1309,–
Dispensing Tray VB 1, robust polyethylene, blue	B	169,–	60,–	229,–
WP-PE 2/11, made of robust polyethylene	B	1560,–	254,–	1814,–
Dispensing Tray VB 2, robust polyethylene, blue	B	158,–	60,–	218,–
WP-PE 2/2, made of robust polyethylene	B	301,–	130,–	431,–
WP-PE 4/2, made of robust polyethylene	B	469,–	130,–	599,–
WP-PE 4/4, made of robust polyethylene	B	487,–	130,–	617,–
WP-PE 8/11, made of robust polyethylene	B	1560,–	254,–	1814,–

Mobile Polyethylene Sump Tray Type WPT	Category	Price	Freight charges	Price including freight charges
WPT 230, made of robust polyethylene	B	538,–	130,–	668,–

Prices in EUR, valid EXW DE-46354 Südlohn, DE-38820 Halberstadt, unpacked
Freight charges valid CPT Spain, islands and oversea territories excluded

BAUER GmbH
Eichendorffstr. 62
46354 Südlohn, Germany

Tel. +49 2862 70 90
info@bauer-suedlohn.com
www.bauer-suedlohn.com

Geschäftsführer
Patrick Bauer, Pascal Bauer
Amtsgericht Coesfeld HRB 5259

TÜVNORD
TÜV NORD CERT GmbH
DIN EN ISO 9001
tuev-nord.de

Price List 0726 en-ES
Hazardous Materials Containers

Fluorescent Tube Box Type AL-D	Category	Price	Freight charges	Price including freight charges
AL-D 150, aluminium	C	518,–	130,–	648,–
AL-D 200, aluminium	C	571,–	130,–	701,–

Collecting Container Type ASB	Category	Price	Freight charges	Price including freight charges
ASB 250, hot-dip galvanized	C	2038,–	291,–	2329,–
ASB 450-I, hot-dip galvanized	C	2155,–	291,–	2446,–

Special Waste Container Type ASK	Category	Price	Freight charges	Price including freight charges
ASK 540-4, hot-dip galvanized	C	on request	on request	on request

Duo-Container Type DC	Category	Price	Freight charges	Price including freight charges
DC 450, hot-dip galvanized	C	2347,–	on request	on request
Stainless steel strainer	D	118,–	9,–	127,–
Wing nut spanner for M12, hot-dip galvanized	F	35,–	15,–	50,–
DC 1000, hot-dip galvanized	C	2493,–	on request	on request
Stainless steel strainer	D	118,–	9,–	127,–
Wing nut spanner for M12, hot-dip galvanized	F	35,–	15,–	50,–

Lithium-Ion Storage Container Type LIL	Category	Price	Freight charges	Price including freight charges
LIL 30, hot-dip galvanized	B	1937,–	130,–	2067,–
LIL 90, hot-dip galvanized	B	2816,–	201,–	3017,–
Castor Set, polyamide, Load capacity 1050 kg / castor set	A	156,–	15,–	171,–
LIL 220, hot-dip galvanized	B	4864,–	291,–	5155,–
Castor Set, polyamide, Load capacity 1050 kg / castor set	A	156,–	15,–	171,–
LIL 280, hot-dip galvanized	B	5884,–	291,–	6175,–
Castor Set, polyamide, Load capacity 1050 kg / castor set	A	156,–	15,–	171,–
LIL 340, hot-dip galvanized	B	6792,–	291,–	7083,–
Castor Set, polyamide, Load capacity 1050 kg / castor set	A	156,–	15,–	171,–

MobiCont Type M 800	Category	Price	Freight charges	Price including freight charges
M 800, painted	C	1389,–	291,–	1680,–
Level Indicator	C	220,–	9,–	229,–
Funnel for filling, PP	D	68,–	9,–	77,–
Filling/Extraction lid	C	68,–	9,–	77,–
Lid, galvanized, without a lock	C	195,–	15,–	210,–
Lid, galvanized, with square lock	C	242,–	18,–	260,–
Lid, galvanized, with cylinder lock	C	242,–	18,–	260,–
Castor Set, polyamide, Load capacity 1350 kg / castor set	A	192,–	15,–	207,–
Hand Pump K 10 C, connects to drum thread, suitable for fuels and heating fuel	C	95,–	14,–	109,–
Hose Kit (1.5 m) for Hand Pump Type K 10 C, suitable for diesel and fuel	C	68,–	14,–	82,–
Hose Kit (3 m) for Hand Pump Type K 10 C, suitable for diesel and fuel	C	96,–	15,–	111,–

Prices in EUR, valid EXW DE-46354 Südlohn, DE-38820 Halberstadt, unpacked
Freight charges valid CPT Spain, islands and oversea territories excluded

BAUER GmbH
Eichendorffstr. 62
46354 Südlohn, Germany

Tel. +49 2862 70 90
info@bauer-suedlohn.com
www.bauer-suedlohn.com

Geschäftsführer
Patrick Bauer, Pascal Bauer
Amtsgericht Coesfeld HRB 5259

TÜVNORD
TÜV NORD CERT GmbH
DIN EN ISO 9001
tuev-nord.de

Price List 0726 en-ES
Hazardous Materials Containers

MobiCont Type M 800	Category	Price	Freight charges	Price including freight charges
Hose Kit (4 m) for Hand Pump Type K 10 C, suitable for diesel and fuel	C	109,–	15,–	124,–
Electric Pump TecPump 400 DC 12V	C	510,–	15,–	525,–
Electric Pump TecPump 400 DC 24V	C	510,–	15,–	525,–
Electric Pump TecPump 600 AC 230V	C	510,–	15,–	525,–
M 800, hot-dip galvanized	C	1483,–	291,–	1774,–
Level Indicator	C	220,–	9,–	229,–
Funnel for filling, PP	D	68,–	9,–	77,–
Filling/Extraction lid	C	68,–	9,–	77,–
Lid, galvanized, without a lock	C	195,–	15,–	210,–
Lid, galvanized, with square lock	C	242,–	18,–	260,–
Lid, galvanized, with cylinder lock	C	242,–	18,–	260,–
Castor Set, polyamide, Load capacity 1350 kg / castor set	A	192,–	15,–	207,–
Hand Pump K 10 C, connects to drum thread, suitable for fuels and heating fuel	C	95,–	14,–	109,–
Hose Kit (1.5 m) for Hand Pump Type K 10 C, suitable for diesel and fuel	C	68,–	14,–	82,–
Hose Kit (3 m) for Hand Pump Type K 10 C, suitable for diesel and fuel	C	96,–	15,–	111,–
Hose Kit (4 m) for Hand Pump Type K 10 C, suitable for diesel and fuel	C	109,–	15,–	124,–
Electric Pump TecPump 400 DC 12V	C	510,–	15,–	525,–
Electric Pump TecPump 400 DC 24V	C	510,–	15,–	525,–
Electric Pump TecPump 600 AC 230V	C	510,–	15,–	525,–

MobiCont Type MD	Category	Price	Freight charges	Price including freight charges
MD 800, painted	C	1934,–	291,–	2225,–
Level Indicator	C	220,–	9,–	229,–
Hand Pump K 10 C, connects to drum thread, suitable for fuels and heating fuel	C	95,–	14,–	109,–
Hose Kit (1.5 m) for Hand Pump Type K 10 C, suitable for diesel and fuel	C	68,–	14,–	82,–
Hose Kit (3 m) for Hand Pump Type K 10 C, suitable for diesel and fuel	C	96,–	15,–	111,–
Hose Kit (4 m) for Hand Pump Type K 10 C, suitable for diesel and fuel	C	109,–	15,–	124,–
Electric Pump TecPump 400 DC 12V	C	510,–	15,–	525,–
Electric Pump TecPump 400 DC 24V	C	510,–	15,–	525,–
Electric Pump TecPump 600 AC 230V	C	510,–	15,–	525,–
MD 800, hot-dip galvanized	C	2025,–	291,–	2316,–
Level Indicator	C	220,–	9,–	229,–
Hand Pump K 10 C, connects to drum thread, suitable for fuels and heating fuel	C	95,–	14,–	109,–
Hose Kit (1.5 m) for Hand Pump Type K 10 C, suitable for diesel and fuel	C	68,–	14,–	82,–
Hose Kit (3 m) for Hand Pump Type K 10 C, suitable for diesel and fuel	C	96,–	15,–	111,–
Hose Kit (4 m) for Hand Pump Type K 10 C, suitable for diesel and fuel	C	109,–	15,–	124,–
Electric Pump TecPump 400 DC 12V	C	510,–	15,–	525,–
Electric Pump TecPump 400 DC 24V	C	510,–	15,–	525,–
Electric Pump TecPump 600 AC 230V	C	510,–	15,–	525,–

MobiCont Type MO	Category	Price	Freight charges	Price including freight charges
MO 800, painted	C	on request	on request	on request
Level Indicator	C	220,–	9,–	229,–
MO 800, hot-dip galvanized	C	on request	on request	on request
Level Indicator	C	220,–	9,–	229,–

Prices in EUR, valid EXW DE-46354 Südlohn, DE-38820 Halberstadt, unpacked
Freight charges valid CPT Spain, islands and oversea territories excluded

BAUER GmbH
Eichendorffstr. 62
46354 Südlohn, Germany

Tel. +49 2862 70 90
info@bauer-suedlohn.com
www.bauer-suedlohn.com

Geschäftsführer
Patrick Bauer, Pascal Bauer
Amtsgericht Coesfeld HRB 5259

TÜVNORD
TÜV NORD CERT GmbH
DIN EN ISO 9001
tuev-nord.de

Price List 0726 en-ES
Hazardous Materials Containers

Fuel Container Type MT	Category	Price	Freight charges	Price including freight charges
MT 450, hot-dip galvanized	C	2223,–	291,–	2514,–
Level Indicator	C	220,–	9,–	229,–
Hand Pump K 10 C, connects to drum thread, suitable for fuels and heating fuel	C	95,–	14,–	109,–
Digital Flow Counter FMT 3 with screwed joints	C	320,–	9,–	329,–
Electric Pump TecPump 400 DC 12V	C	510,–	12,–	522,–
Electric Pump TecPump 400 DC 24V	C	510,–	12,–	522,–
Electric Pump TecPump 600 AC 230V	C	510,–	12,–	522,–
Counter Z 400, Retrofit Kit for Electric Pumps TecPump 400 DC 12V, 400 DC 24V and 600 AC 230V	C	159,–	9,–	168,–
MT 600, hot-dip galvanized	C	2644,–	291,–	2935,–
Level Indicator	C	220,–	9,–	229,–
Hand Pump K 10 C, connects to drum thread, suitable for fuels and heating fuel	C	95,–	14,–	109,–
Digital Flow Counter FMT 3 with screwed joints	C	320,–	9,–	329,–
Electric Pump TecPump 400 DC 12V	C	510,–	12,–	522,–
Electric Pump TecPump 400 DC 24V	C	510,–	12,–	522,–
Electric Pump TecPump 600 AC 230V	C	510,–	12,–	522,–
Counter Z 400, Retrofit Kit for Electric Pumps TecPump 400 DC 12V, 400 DC 24V and 600 AC 230V	C	159,–	9,–	168,–
MT 1000, hot-dip galvanized	C	2858,–	357,–	3215,–
Level Indicator	C	220,–	9,–	229,–
Hand Pump K 10 C, connects to drum thread, suitable for fuels and heating fuel	C	95,–	14,–	109,–
Digital Flow Counter FMT 3 with screwed joints	C	320,–	9,–	329,–
Electric Pump TecPump 400 DC 12V	C	510,–	12,–	522,–
Electric Pump TecPump 400 DC 24V	C	510,–	12,–	522,–
Electric Pump TecPump 600 AC 230V	C	510,–	12,–	522,–
Counter Z 400, Retrofit Kit for Electric Pumps TecPump 400 DC 12V, 400 DC 24V and 600 AC 230V	C	159,–	9,–	168,–

MobiCont Type MW	Category	Price	Freight charges	Price including freight charges
MW 800, painted	C	1783,–	291,–	2074,–
Level Indicator	C	220,–	9,–	229,–
Filling coupling	C	53,–	8,–	61,–
Tank heating, 220 W	C	384,–	12,–	396,–
Tank fitting	B	67,–	9,–	76,–
Anti-siphon valve	D	71,–	8,–	79,–
Aeration/Vent valve	C	27,–	8,–	35,–
MW 800, hot-dip galvanized	C	1877,–	291,–	2168,–
Level Indicator	C	220,–	9,–	229,–
Filling coupling	C	53,–	8,–	61,–
Tank heating, 220 W	C	384,–	12,–	396,–
Tank fitting	B	67,–	9,–	76,–
Anti-siphon valve	D	71,–	8,–	79,–
Aeration/Vent valve	C	27,–	8,–	35,–

Special Waste Container Type SAF	Category	Price	Freight charges	Price including freight charges
SAF 450, hot-dip galvanized	C	1136,–	on request	on request
SAF 600, hot-dip galvanized	C	1136,–	on request	on request
SAF 1000, hot-dip galvanized	C	1136,–	on request	on request

Prices in EUR, valid EXW DE-46354 Südlohn, DE-38820 Halberstadt, unpacked
Freight charges valid CPT Spain, islands and oversea territories excluded

BAUER GmbH
Eichendorffstr. 62
46354 Südlohn, Germany

Tel. +49 2862 70 90
info@bauer-suedlohn.com
www.bauer-suedlohn.com

Geschäftsführer
Patrick Bauer, Pascal Bauer
Amtsgericht Coesfeld HRB 5259

TÜVNORD
TÜV NORD CERT GmbH
DIN EN ISO 9001
tuev-nord.de

Price List 0726 en-ES
Hazardous Materials Containers

Large Salvage Packaging Type SAG	Category	Price	Freight charges	Price including freight charges
SAG 800, hot-dip galvanized	C	1141,–	291,–	1432,–
SAG 1500, hot-dip galvanized	C	2151,–	on request	on request
Polyethylene sacks, 25 pieces on roll	C	187,–	41,–	228,–
SAG 2100, hot-dip galvanized	C	2257,–	on request	on request
Polyethylene sacks, 25 pieces on roll	C	187,–	41,–	228,–
SAG 2700, hot-dip galvanized	C	2331,–	on request	on request
Polyethylene sacks, 25 pieces on roll	C	187,–	41,–	228,–

Special Waste Container Type SAP	Category	Price	Freight charges	Price including freight charges
SAP 450, hot-dip galvanized	C	953,–	on request	on request
Polyethylene sacks, 50 pieces on roll - 0,085 mm	C	139,–	62,–	201,–
Polyethylene sacks, 50 pieces on roll - 0,16 mm	C	246,–	130,–	376,–
SAP 600, hot-dip galvanized	C	953,–	on request	on request
Polyethylene sacks, 50 pieces on roll - 0,085 mm	C	139,–	62,–	201,–
Polyethylene sacks, 50 pieces on roll - 0,16 mm	C	246,–	130,–	376,–
SAP 800, hot-dip galvanized	C	953,–	on request	on request
Polyethylene sacks, 50 pieces on roll - 0,085 mm	C	139,–	62,–	201,–
Polyethylene sacks, 50 pieces on roll - 0,16 mm	C	246,–	130,–	376,–

Special Waste Container Type SAP-1	Category	Price	Freight charges	Price including freight charges
SAP 450-1, hot-dip galvanized	C	891,–	on request	on request
Polyethylene sacks, 50 pieces on roll - 0,085 mm	C	139,–	62,–	201,–
Polyethylene sacks, 50 pieces on roll - 0,16 mm	C	246,–	130,–	376,–
SAP 600-1, hot-dip galvanized	C	891,–	on request	on request
Polyethylene sacks, 50 pieces on roll - 0,085 mm	C	139,–	62,–	201,–
Polyethylene sacks, 50 pieces on roll - 0,16 mm	C	246,–	130,–	376,–
SAP 800-1, hot-dip galvanized	C	891,–	on request	on request
Polyethylene sacks, 50 pieces on roll - 0,085 mm	C	139,–	62,–	201,–
Polyethylene sacks, 50 pieces on roll - 0,16 mm	C	246,–	130,–	376,–
SAP 800-3, hot-dip galvanized	C	874,–	on request	on request
Polyethylene sacks, 50 pieces on roll - 0,085 mm	C	139,–	62,–	201,–
Polyethylene sacks, 50 pieces on roll - 0,16 mm	C	246,–	130,–	376,–

Used Battery Container Type SAP 600 K	Category	Price	Freight charges	Price including freight charges
SAP 600 K, hot-dip galvanized	C	1286,–	on request	on request

Used Battery Container Type SAP 601 K	Category	Price	Freight charges	Price including freight charges
SAP 601 K, hot-dip galvanized	C	1141,–	on request	on request

Special Waste Container Type SAS	Category	Price	Freight charges	Price including freight charges
SAS 800, hot-dip galvanized	C	963,–	on request	on request

Hazardous Materials Container Type SF	Category	Price	Freight charges	Price including freight charges
SF 240, hot-dip galvanized	C	on request	on request	on request

Prices in EUR, valid EXW DE-46354 Südlohn, DE-38820 Halberstadt, unpacked
Freight charges valid CPT Spain, islands and oversea territories excluded

BAUER GmbH
Eichendorffstr. 62
46354 Südlohn, Germany

Tel. +49 2862 70 90
info@bauer-suedlohn.com
www.bauer-suedlohn.com

Geschäftsführer
Patrick Bauer, Pascal Bauer
Amtsgericht Coesfeld HRB 5259

TÜVNORD
TÜV NORD CERT GmbH
DIN EN ISO 9001
tuev-nord.de

Price List 0726 en-ES
Hazardous Materials Containers

Fluorescent Tube Box Type SL	Category	Price	Freight charges	Price including freight charges
SL 150, painted	C	688,–	201,–	889,–
SL 150, hot-dip galvanized	C	822,–	201,–	1023,–
SL 200, painted	C	766,–	201,–	967,–
SL 200, hot-dip galvanized	C	902,–	291,–	1193,–

Fluorescent Tube Box Type SL-D	Category	Price	Freight charges	Price including freight charges
SL-D 150, painted	C	757,–	201,–	958,–
Removable Tray, galvanized	C	87,–	10,–	97,–
SL-D 150, hot-dip galvanized	C	880,–	201,–	1081,–
Removable Tray, galvanized	C	87,–	10,–	97,–
SL-D 200, painted	C	837,–	201,–	1038,–
Removable Tray, galvanized	C	87,–	10,–	97,–
SL-D 200, hot-dip galvanized	C	973,–	201,–	1174,–
Removable Tray, galvanized	C	87,–	10,–	97,–

Fluorescent Tube Box Type SL-N	Category	Price	Freight charges	Price including freight charges
SL-N 220, painted	C	861,–	201,–	1062,–
SL-N 220, hot-dip galvanized	C	1003,–	201,–	1204,–

Special Waste Container Type SP	Category	Price	Freight charges	Price including freight charges
SP 100, hot-dip galvanized	C	on request	on request	on request
SP 240, hot-dip galvanized	C	on request	on request	on request

Transport Box for Aerosol Cans Type STB	Category	Price	Freight charges	Price including freight charges
STB 1000, hot-dip galvanized	C	1158,–	on request	on request
Polyethylene sacks, 50 pieces on roll	C	192,–	62,–	254,–
Absorbent felt, 100 pieces	C	366,–	60,–	426,–

Prices in EUR, valid EXW DE-46354 Südlohn, DE-38820 Halberstadt, unpacked
Freight charges valid CPT Spain, islands and oversea territories excluded

BAUER GmbH
Eichendorffstr. 62
46354 Südlohn, Germany

Tel. +49 2862 70 90
info@bauer-suedlohn.com
www.bauer-suedlohn.com

Geschäftsführer
Patrick Bauer, Pascal Bauer
Amtsgericht Coesfeld HRB 5259

TÜVNORD
TÜV NORD CERT GmbH
DIN EN ISO 9001
tuev-nord.de