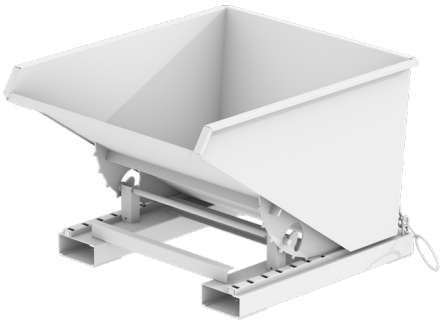

PRICE LIST 0726 EN-GB

FORKLIFT TRUCK ATTACHMENTS

WORKSPACE MATERIAL HANDLING

ENVIRONMENT / STORAGE

HAZARDOUS MATERIALS CONTAINERS

INNOVATION – CONSTRUCTION – PRODUCTION

. . . since 1966

Price List 0726 en-GB
Forklift Truck Attachments

Drum Gripper Type 3P	Category	Price	Freight charges	Price including freight charges
3P, painted	B	942,–	192,–	1134,–
3P, hot-dip galvanized	B	990,–	192,–	1182,–

Tilting Container Type 3S	Category	Price	Freight charges	Price including freight charges
3S 300, painted	A	1244,–	274,–	1518,–
Lid, galvanized	A	174,–	18,–	192,–
Castor Set, polyamide, Load capacity 1050 kg / castor set	A	136,–	15,–	151,–
3S 300, hot-dip galvanized	A	1342,–	383,–	1725,–
Lid, galvanized	A	174,–	18,–	192,–
Castor Set, polyamide, Load capacity 1050 kg / castor set	A	136,–	15,–	151,–
3S 600, painted	A	1300,–	383,–	1683,–
Lid, galvanized	A	196,–	22,–	218,–
Castor Set, polyamide, Load capacity 1050 kg / castor set	A	136,–	15,–	151,–
3S 600, hot-dip galvanized	A	1402,–	383,–	1785,–
Lid, galvanized	A	196,–	22,–	218,–
Castor Set, polyamide, Load capacity 1050 kg / castor set	A	136,–	15,–	151,–

Automatic Tilting Container Type 4A	Category	Price	Freight charges	Price including freight charges
4A 600, painted	A	1103,–	274,–	1377,–
Lid, galvanized	A	196,–	22,–	218,–
Skip Body Welded Oil and Watertight	A	78,–	0,–	78,–
4A 600, hot-dip galvanized	A	1250,–	274,–	1524,–
Lid, galvanized	A	196,–	22,–	218,–
Skip Body Welded Oil and Watertight	A	78,–	0,–	78,–
4A 900, painted	A	1239,–	383,–	1622,–
Lid, galvanized	A	223,–	27,–	250,–
Skip Body Welded Oil and Watertight	A	78,–	0,–	78,–
4A 900, hot-dip galvanized	A	1424,–	383,–	1807,–
Lid, galvanized	A	223,–	27,–	250,–
Skip Body Welded Oil and Watertight	A	78,–	0,–	78,–
4A 1200, painted	A	1327,–	383,–	1710,–
Lid, galvanized	A	223,–	26,–	249,–
Skip Body Welded Oil and Watertight	A	121,–	0,–	121,–
4A 1200, hot-dip galvanized	A	1558,–	383,–	1941,–
Lid, galvanized	A	223,–	26,–	249,–
Skip Body Welded Oil and Watertight	A	121,–	0,–	121,–

Drum Gripper Type 4P	Category	Price	Freight charges	Price including freight charges
4P, painted	B	578,–	74,–	652,–
4P, hot-dip galvanized	B	551,–	74,–	625,–

Prices in EUR, valid EXW DE-46354 Südlohn, DE-38820 Halberstadt, unpacked
Freight charges valid CPT Great Britain, islands & the following post code areas excluded: IC, ZE

BAUER GmbH
Eichendorffstr. 62
46354 Südlohn, Germany

Tel. +49 2862 70 90
info@bauer-suedlohn.com
www.bauer-suedlohn.com

Geschäftsführer
Patrick Bauer, Pascal Bauer
Amtsgericht Coesfeld HRB 5259

TÜVNORD
TÜV NORD CERT GmbH
DIN EN ISO 9001
tuev-nord.de

Price List 0726 en-GB
Forklift Truck Attachments

Drum Gripper Type 4P-D	Category	Price	Freight charges	Price including freight charges
4P-D120, painted	B	578,–	74,–	652,–
4P-D120, hot-dip galvanized	B	551,–	74,–	625,–
4P-D220, painted	B	578,–	74,–	652,–
4P-D220, hot-dip galvanized	B	551,–	74,–	625,–

Tilting Container Type AK	Category	Price	Freight charges	Price including freight charges
AK 50, painted	A	802,–	274,–	1076,–
Lid, galvanized	A	140,–	16,–	156,–
Castor Set, polyamide, Load capacity 1050 kg / castor set	A	136,–	15,–	151,–
Skip Body Welded Oil and Watertight	A	78,–	0,–	78,–
AK 50, hot-dip galvanized	A	956,–	274,–	1230,–
Lid, galvanized	A	140,–	16,–	156,–
Castor Set, polyamide, Load capacity 1050 kg / castor set	A	136,–	15,–	151,–
Skip Body Welded Oil and Watertight	A	78,–	0,–	78,–
AK 75, painted	A	897,–	274,–	1171,–
Lid, galvanized	A	192,–	21,–	213,–
Castor Set, polyamide, Load capacity 1050 kg / castor set	A	136,–	15,–	151,–
Skip Body Welded Oil and Watertight	A	78,–	0,–	78,–
AK 75, hot-dip galvanized	A	1048,–	383,–	1431,–
Lid, galvanized	A	192,–	21,–	213,–
Castor Set, polyamide, Load capacity 1050 kg / castor set	A	136,–	15,–	151,–
Skip Body Welded Oil and Watertight	A	78,–	0,–	78,–
AK 100, painted	A	970,–	383,–	1353,–
Lid, galvanized	A	218,–	26,–	244,–
Castor Set, polyamide, Load capacity 1050 kg / castor set	A	136,–	15,–	151,–
Skip Body Welded Oil and Watertight	A	121,–	0,–	121,–
AK 100, hot-dip galvanized	A	1133,–	383,–	1516,–
Lid, galvanized	A	218,–	26,–	244,–
Castor Set, polyamide, Load capacity 1050 kg / castor set	A	136,–	15,–	151,–
Skip Body Welded Oil and Watertight	A	121,–	0,–	121,–
AK 150, painted	A	1238,–	383,–	1621,–
Lid, galvanized	A	305,–	28,–	333,–
Castor Set, polyamide, Load capacity 1050 kg / castor set	A	136,–	15,–	151,–
Skip Body Welded Oil and Watertight	A	121,–	0,–	121,–
AK 150, hot-dip galvanized	A	1448,–	383,–	1831,–
Lid, galvanized	A	305,–	28,–	333,–
Castor Set, polyamide, Load capacity 1050 kg / castor set	A	136,–	15,–	151,–
Skip Body Welded Oil and Watertight	A	121,–	0,–	121,–

Container for Building Materials Type BBG	Category	Price	Freight charges	Price including freight charges
BBG 100, painted	A	405,–	274,–	679,–
Lid, galvanized	A	189,–	157,–	346,–
BBG 100, hot-dip galvanized	A	496,–	274,–	770,–
Lid, galvanized	A	189,–	157,–	346,–

Prices in EUR, valid EXW DE-46354 Südlohn, DE-38820 Halberstadt, unpacked
Freight charges valid CPT Great Britain, islands & the following post code areas excluded: IC, ZE

BAUER GmbH
Eichendorffstr. 62
46354 Südlohn, Germany

Tel. +49 2862 70 90
info@bauer-suedlohn.com
www.bauer-suedlohn.com

Geschäftsführer
Patrick Bauer, Pascal Bauer
Amtsgericht Coesfeld HRB 5259

TÜVNORD
TÜV NORD CERT GmbH
DIN EN ISO 9001
tuev-nord.de

Price List 0726 en-GB
Forklift Truck Attachments

Container for Building Materials Type BBK	Category	Price	Freight charges	Price including freight charges
BBK 100, painted	A	496,–	274,–	770,–
Lid, galvanized	A	189,–	157,–	346,–
BBK 100, hot-dip galvanized	A	571,–	274,–	845,–
Lid, galvanized	A	189,–	157,–	346,–

Material Container Type BBM	Category	Price	Freight charges	Price including freight charges
BBM 500, painted	A	325,–	192,–	517,–
BBM 500, hot-dip galvanized	A	359,–	192,–	551,–

Container for Building Materials Type BBP	Category	Price	Freight charges	Price including freight charges
BBP 100, painted	A	433,–	192,–	625,–
Lid, galvanized	A	189,–	157,–	346,–
Pick-up cones (pins) and angle iron traverse lock	A	51,–	10,–	61,–
BBP 100, hot-dip galvanized	A	511,–	192,–	703,–
Lid, galvanized	A	189,–	157,–	346,–
Pick-up cones (pins) and angle iron traverse lock	A	51,–	10,–	61,–

Tilting Traverse for Containers for Building Material Containers Type BBT	Category	Price	Freight charges	Price including freight charges
BBT, painted	A	571,–	274,–	845,–
BBT, hot-dip galvanized	A	649,–	274,–	923,–

Building Materials Container Type BC	Category	Price	Freight charges	Price including freight charges
BC 500, painted	B	957,–	274,–	1231,–
Lid, galvanized	B	143,–	16,–	159,–
Castor Set, polyamide, Load capacity 1350 kg / castor set	A	192,–	15,–	207,–
BC 500, hot-dip galvanized	B	1179,–	383,–	1562,–
Lid, galvanized	B	143,–	16,–	159,–
Castor Set, polyamide, Load capacity 1350 kg / castor set	A	192,–	15,–	207,–
BC 500 (brick clamp operated), painted	B	1026,–	274,–	1300,–
Lid, galvanized	B	143,–	16,–	159,–
Castor Set, polyamide, Load capacity 1350 kg / castor set	A	192,–	15,–	207,–
BC 500 (brick clamp operated), hot-dip galvanized	B	1250,–	383,–	1633,–
Lid, galvanized	B	143,–	16,–	159,–
Castor Set, polyamide, Load capacity 1350 kg / castor set	A	192,–	15,–	207,–
BC 1000, painted	B	1043,–	383,–	1426,–
Lid, galvanized	B	143,–	16,–	159,–
Castor Set, polyamide, Load capacity 1350 kg / castor set	A	192,–	15,–	207,–
BC 1000, hot-dip galvanized	B	1316,–	383,–	1699,–
Lid, galvanized	B	143,–	16,–	159,–
Castor Set, polyamide, Load capacity 1350 kg / castor set	A	192,–	15,–	207,–
BC 1000 (brick clamp operated), painted	B	1111,–	383,–	1494,–
Lid, galvanized	B	143,–	16,–	159,–
Castor Set, polyamide, Load capacity 1350 kg / castor set	A	192,–	15,–	207,–
BC 1000 (brick clamp operated), hot-dip galvanized	B	1386,–	383,–	1769,–
Lid, galvanized	B	143,–	16,–	159,–

Prices in EUR, valid EXW DE-46354 Südlohn, DE-38820 Halberstadt, unpacked
Freight charges valid CPT Great Britain, islands & the following post code areas excluded: IC, ZE

BAUER GmbH
Eichendorffstr. 62
46354 Südlohn, Germany

Tel. +49 2862 70 90
info@bauer-suedlohn.com
www.bauer-suedlohn.com

Geschäftsführer
Patrick Bauer, Pascal Bauer
Amtsgericht Coesfeld HRB 5259

TÜVNORD
TÜV NORD CERT GmbH
DIN EN ISO 9001
tuev-nord.de

Price List 0726 en-GB
Forklift Truck Attachments

Building Materials Container Type BC	Category	Price	Freight charges	Price including freight charges
Castor Set, polyamide, Load capacity 1350 kg / castor set	A	192,–	15,–	207,–

Tilting Container Type BK	Category	Price	Freight charges	Price including freight charges
BK 30, painted	A	700,–	274,–	974,–
Lid, galvanized	A	98,–	18,–	116,–
Castor Set, polyamide, Load capacity 1350 kg / castor set	A	192,–	15,–	207,–
Heavy-duty Castor Set, polyamide, Load capacity 2550 kg / castor set	A	379,–	15,–	394,–
Skip Body Welded Oil and Watertight	A	78,–	0,–	78,–
BK 30, hot-dip galvanized	A	984,–	274,–	1258,–
Lid, galvanized	A	98,–	18,–	116,–
Castor Set, polyamide, Load capacity 1350 kg / castor set	A	192,–	15,–	207,–
Heavy-duty Castor Set, polyamide, Load capacity 2550 kg / castor set	A	379,–	15,–	394,–
Skip Body Welded Oil and Watertight	A	78,–	0,–	78,–
BK 50, painted	A	984,–	274,–	1258,–
Lid, galvanized	A	98,–	20,–	118,–
Castor Set, polyamide, Load capacity 1350 kg / castor set	A	192,–	15,–	207,–
Heavy-duty Castor Set, polyamide, Load capacity 2550 kg / castor set	A	379,–	15,–	394,–
Skip Body Welded Oil and Watertight	A	78,–	0,–	78,–
BK 50, hot-dip galvanized	A	1327,–	383,–	1710,–
Lid, galvanized	A	98,–	20,–	118,–
Castor Set, polyamide, Load capacity 1350 kg / castor set	A	192,–	15,–	207,–
Heavy-duty Castor Set, polyamide, Load capacity 2550 kg / castor set	A	379,–	15,–	394,–
Skip Body Welded Oil and Watertight	A	78,–	0,–	78,–
BK 80, painted	A	1297,–	383,–	1680,–
Lid, galvanized	A	144,–	22,–	166,–
Castor Set, polyamide, Load capacity 1350 kg / castor set	A	192,–	15,–	207,–
Heavy-duty Castor Set, polyamide, Load capacity 2550 kg / castor set	A	379,–	15,–	394,–
Skip Body Welded Oil and Watertight	A	78,–	0,–	78,–
BK 80, hot-dip galvanized	A	1814,–	383,–	2197,–
Lid, galvanized	A	144,–	22,–	166,–
Castor Set, polyamide, Load capacity 1350 kg / castor set	A	192,–	15,–	207,–
Heavy-duty Castor Set, polyamide, Load capacity 2550 kg / castor set	A	379,–	15,–	394,–
Skip Body Welded Oil and Watertight	A	78,–	0,–	78,–
BK 100, painted	A	1508,–	383,–	1891,–
Lid, galvanized	A	173,–	27,–	200,–
Castor Set, polyamide, Load capacity 1350 kg / castor set	A	192,–	15,–	207,–
Heavy-duty Castor Set, polyamide, Load capacity 2550 kg / castor set	A	379,–	15,–	394,–
Skip Body Welded Oil and Watertight	A	121,–	0,–	121,–
BK 100, hot-dip galvanized	A	2070,–	383,–	2453,–
Lid, galvanized	A	173,–	27,–	200,–
Castor Set, polyamide, Load capacity 1350 kg / castor set	A	192,–	15,–	207,–
Heavy-duty Castor Set, polyamide, Load capacity 2550 kg / castor set	A	379,–	15,–	394,–
Skip Body Welded Oil and Watertight	A	121,–	0,–	121,–
BK 120, painted	A	1640,–	383,–	2023,–
Lid, galvanized	A	184,–	32,–	216,–
Castor Set, polyamide, Load capacity 1350 kg / castor set	A	192,–	15,–	207,–

Prices in EUR, valid EXW DE-46354 Südlohn, DE-38820 Halberstadt, unpacked
Freight charges valid CPT Great Britain, islands & the following post code areas excluded: IC, ZE

BAUER GmbH
Eichendorffstr. 62
46354 Südlohn, Germany

Tel. +49 2862 70 90
info@bauer-suedlohn.com
www.bauer-suedlohn.com

Geschäftsführer
Patrick Bauer, Pascal Bauer
Amtsgericht Coesfeld HRB 5259

TÜVNORD
TÜV NORD CERT GmbH
DIN EN ISO 9001
tuev-nord.de

Price List 0726 en-GB
Forklift Truck Attachments

Tilting Container Type BK	Category	Price	Freight charges	Price including freight charges
Heavy-duty Castor Set, polyamide, Load capacity 2550 kg / castor set	A	379,–	15,–	394,–
Skip Body Welded Oil and Watertight	A	121,–	0,–	121,–
BK 120, hot-dip galvanized	A	2235,–	383,–	2618,–
Lid, galvanized	A	184,–	32,–	216,–
Castor Set, polyamide, Load capacity 1350 kg / castor set	A	192,–	15,–	207,–
Heavy-duty Castor Set, polyamide, Load capacity 2550 kg / castor set	A	379,–	15,–	394,–
Skip Body Welded Oil and Watertight	A	121,–	0,–	121,–
BK 150, painted	A	1801,–	459,–	2260,–
Lid, galvanized	A	211,–	39,–	250,–
Castor Set, polyamide, Load capacity 1350 kg / castor set	A	192,–	15,–	207,–
Heavy-duty Castor Set, polyamide, Load capacity 2550 kg / castor set	A	379,–	15,–	394,–
Skip Body Welded Oil and Watertight	A	121,–	0,–	121,–
BK 150, hot-dip galvanized	A	2444,–	459,–	2903,–
Lid, galvanized	A	211,–	39,–	250,–
Castor Set, polyamide, Load capacity 1350 kg / castor set	A	192,–	15,–	207,–
Heavy-duty Castor Set, polyamide, Load capacity 2550 kg / castor set	A	379,–	15,–	394,–
Skip Body Welded Oil and Watertight	A	121,–	0,–	121,–
BK 200, painted	A	2240,–	459,–	2699,–
Lid, galvanized	A	223,–	157,–	380,–
Castor Set, polyamide, Load capacity 1350 kg / castor set	A	192,–	15,–	207,–
Heavy-duty Castor Set, polyamide, Load capacity 2550 kg / castor set	A	379,–	15,–	394,–
Skip Body Welded Oil and Watertight	A	121,–	0,–	121,–
BK 200, hot-dip galvanized	A	3052,–	624,–	3676,–
Lid, galvanized	A	223,–	157,–	380,–
Castor Set, polyamide, Load capacity 1350 kg / castor set	A	192,–	15,–	207,–
Heavy-duty Castor Set, polyamide, Load capacity 2550 kg / castor set	A	379,–	15,–	394,–
Skip Body Welded Oil and Watertight	A	121,–	0,–	121,–

Container With Drop Away Base Type BKB	Category	Price	Freight charges	Price including freight charges
BKB 500, painted	A	763,–	274,–	1037,–
Lid, galvanized	A	196,–	18,–	214,–
Castor Set, polyamide, Load capacity 1350 kg / castor set	A	192,–	15,–	207,–
BKB 500, hot-dip galvanized	A	907,–	274,–	1181,–
Lid, galvanized	A	196,–	18,–	214,–
Castor Set, polyamide, Load capacity 1350 kg / castor set	A	192,–	15,–	207,–
BKB 700, painted	A	816,–	274,–	1090,–
Lid, galvanized	A	196,–	18,–	214,–
Castor Set, polyamide, Load capacity 1350 kg / castor set	A	192,–	15,–	207,–
BKB 700, hot-dip galvanized	A	960,–	274,–	1234,–
Lid, galvanized	A	196,–	18,–	214,–
Castor Set, polyamide, Load capacity 1350 kg / castor set	A	192,–	15,–	207,–
BKB 1000, painted	A	865,–	274,–	1139,–
Lid, galvanized	A	196,–	18,–	214,–
Castor Set, polyamide, Load capacity 1350 kg / castor set	A	192,–	15,–	207,–
BKB 1000, hot-dip galvanized	A	1029,–	274,–	1303,–
Lid, galvanized	A	196,–	18,–	214,–

Prices in EUR, valid EXW DE-46354 Südlohn, DE-38820 Halberstadt, unpacked
Freight charges valid CPT Great Britain, islands & the following post code areas excluded: IC, ZE

BAUER GmbH
Eichendorffstr. 62
46354 Südlohn, Germany

Tel. +49 2862 70 90
info@bauer-suedlohn.com
www.bauer-suedlohn.com

Geschäftsführer
Patrick Bauer, Pascal Bauer
Amtsgericht Coesfeld HRB 5259

TÜVNORD
TÜV NORD CERT GmbH
DIN EN ISO 9001
tuev-nord.de

Price List 0726 en-GB
Forklift Truck Attachments

Container With Drop Away Base Type BKB	Category	Price	Freight charges	Price including freight charges
Castor Set, polyamide, Load capacity 1350 kg / castor set	A	192,–	15,–	207,–

Tilting Container Type BKC	Category	Price	Freight charges	Price including freight charges
BKC 200, painted	A	2308,–	624,–	2932,–
Lid, galvanized	A	450,–	157,–	607,–
Skip Body Welded Oil and Watertight	A	121,–	0,–	121,–
BKC 200, hot-dip galvanized	A	3089,–	624,–	3713,–
Lid, galvanized	A	450,–	157,–	607,–
Skip Body Welded Oil and Watertight	A	121,–	0,–	121,–
BKC 300, painted	A	2558,–	624,–	3182,–
Lid, galvanized	A	450,–	157,–	607,–
Skip Body Welded Oil and Watertight	A	121,–	0,–	121,–
BKC 300, hot-dip galvanized	A	3367,–	624,–	3991,–
Lid, galvanized	A	450,–	157,–	607,–
Skip Body Welded Oil and Watertight	A	121,–	0,–	121,–
BKC 400, painted	A	3150,–	624,–	3774,–
Lid, galvanized	A	450,–	239,–	689,–
Skip Body Welded Oil and Watertight	A	121,–	0,–	121,–
BKC 400, hot-dip galvanized	A	4067,–	791,–	4858,–
Lid, galvanized	A	450,–	239,–	689,–
Skip Body Welded Oil and Watertight	A	121,–	0,–	121,–
BKC 500, painted	A	3659,–	791,–	4450,–
Lid, galvanized	A	450,–	239,–	689,–
Skip Body Welded Oil and Watertight	A	121,–	0,–	121,–
BKC 500, hot-dip galvanized	A	4641,–	791,–	5432,–
Lid, galvanized	A	450,–	239,–	689,–
Skip Body Welded Oil and Watertight	A	121,–	0,–	121,–

Tilting Container Type BKC-H	Category	Price	Freight charges	Price including freight charges
BKC-H 200, painted	A	3422,–	624,–	4046,–
Lid, galvanized	A	450,–	157,–	607,–
Skip Body Welded Oil and Watertight	A	121,–	0,–	121,–
BKC-H 200, hot-dip galvanized	A	4204,–	624,–	4828,–
Lid, galvanized	A	450,–	157,–	607,–
Skip Body Welded Oil and Watertight	A	121,–	0,–	121,–
BKC-H 300, painted	A	3673,–	624,–	4297,–
Lid, galvanized	A	450,–	157,–	607,–
Skip Body Welded Oil and Watertight	A	121,–	0,–	121,–
BKC-H 300, hot-dip galvanized	A	4483,–	624,–	5107,–
Lid, galvanized	A	450,–	157,–	607,–
Skip Body Welded Oil and Watertight	A	121,–	0,–	121,–
BKC-H 400, painted	A	4265,–	624,–	4889,–
Lid, galvanized	A	450,–	239,–	689,–
Skip Body Welded Oil and Watertight	A	121,–	0,–	121,–
BKC-H 400, hot-dip galvanized	A	5182,–	791,–	5973,–

Prices in EUR, valid EXW DE-46354 Südlohn, DE-38820 Halberstadt, unpacked
Freight charges valid CPT Great Britain, islands & the following post code areas excluded: IC, ZE

BAUER GmbH
Eichendorffstr. 62
46354 Südlohn, Germany

Tel. +49 2862 70 90
info@bauer-suedlohn.com
www.bauer-suedlohn.com

Geschäftsführer
Patrick Bauer, Pascal Bauer
Amtsgericht Coesfeld HRB 5259

TÜVNORD
TÜV NORD CERT GmbH
DIN EN ISO 9001
tuev-nord.de

Price List 0726 en-GB
Forklift Truck Attachments

Tilting Container Type BKC-H	Category	Price	Freight charges	Price including freight charges
Lid, galvanized	A	450,–	239,–	689,–
Skip Body Welded Oil and Watertight	A	121,–	0,–	121,–
BKC-H 500, painted	A	4774,–	791,–	5565,–
Lid, galvanized	A	450,–	239,–	689,–
Skip Body Welded Oil and Watertight	A	121,–	0,–	121,–
BKC-H 500, hot-dip galvanized	A	5756,–	791,–	6547,–
Lid, galvanized	A	450,–	239,–	689,–
Skip Body Welded Oil and Watertight	A	121,–	0,–	121,–

Tilting Container Type BKM	Category	Price	Freight charges	Price including freight charges
BKM 30, painted	A	700,–	274,–	974,–
Lid, galvanized	A	104,–	18,–	122,–
Castor Set, polyamide, Load capacity 1350 kg / castor set	A	192,–	15,–	207,–
Heavy-duty Castor Set, polyamide, Load capacity 2550 kg / castor set	A	379,–	15,–	394,–
Skip Body Welded Oil and Watertight	A	78,–	0,–	78,–
BKM 30, hot-dip galvanized	A	984,–	274,–	1258,–
Lid, galvanized	A	104,–	18,–	122,–
Castor Set, polyamide, Load capacity 1350 kg / castor set	A	192,–	15,–	207,–
Heavy-duty Castor Set, polyamide, Load capacity 2550 kg / castor set	A	379,–	15,–	394,–
Skip Body Welded Oil and Watertight	A	78,–	0,–	78,–
BKM 50, painted	A	984,–	274,–	1258,–
Lid, galvanized	A	130,–	21,–	151,–
Castor Set, polyamide, Load capacity 1350 kg / castor set	A	192,–	15,–	207,–
Heavy-duty Castor Set, polyamide, Load capacity 2550 kg / castor set	A	379,–	15,–	394,–
Skip Body Welded Oil and Watertight	A	78,–	0,–	78,–
BKM 50, hot-dip galvanized	A	1327,–	274,–	1601,–
Lid, galvanized	A	130,–	21,–	151,–
Castor Set, polyamide, Load capacity 1350 kg / castor set	A	192,–	15,–	207,–
Heavy-duty Castor Set, polyamide, Load capacity 2550 kg / castor set	A	379,–	15,–	394,–
Skip Body Welded Oil and Watertight	A	78,–	0,–	78,–
BKM 75, painted	A	1246,–	383,–	1629,–
Lid, galvanized	A	142,–	22,–	164,–
Castor Set, polyamide, Load capacity 1350 kg / castor set	A	192,–	15,–	207,–
Heavy-duty Castor Set, polyamide, Load capacity 2550 kg / castor set	A	379,–	15,–	394,–
Skip Body Welded Oil and Watertight	A	78,–	0,–	78,–
BKM 75, hot-dip galvanized	A	1672,–	383,–	2055,–
Lid, galvanized	A	142,–	22,–	164,–
Castor Set, polyamide, Load capacity 1350 kg / castor set	A	192,–	15,–	207,–
Heavy-duty Castor Set, polyamide, Load capacity 2550 kg / castor set	A	379,–	15,–	394,–
Skip Body Welded Oil and Watertight	A	78,–	0,–	78,–
BKM 100, painted	A	1508,–	383,–	1891,–
Lid, galvanized	A	185,–	27,–	212,–
Castor Set, polyamide, Load capacity 1350 kg / castor set	A	192,–	15,–	207,–
Heavy-duty Castor Set, polyamide, Load capacity 2550 kg / castor set	A	379,–	15,–	394,–
Skip Body Welded Oil and Watertight	A	121,–	0,–	121,–
BKM 100, hot-dip galvanized	A	2070,–	383,–	2453,–

Prices in EUR, valid EXW DE-46354 Südlohn, DE-38820 Halberstadt, unpacked
Freight charges valid CPT Great Britain, islands & the following post code areas excluded: IC, ZE

BAUER GmbH
Eichendorffstr. 62
46354 Südlohn, Germany

Tel. +49 2862 70 90
info@bauer-suedlohn.com
www.bauer-suedlohn.com

Geschäftsführer
Patrick Bauer, Pascal Bauer
Amtsgericht Coesfeld HRB 5259

TÜVNORD
TÜV NORD CERT GmbH
DIN EN ISO 9001
tuev-nord.de

Price List 0726 en-GB
Forklift Truck Attachments

Tilting Container Type BKM	Category	Price	Freight charges	Price including freight charges
Lid, galvanized	A	185,–	27,–	212,–
Castor Set, polyamide, Load capacity 1350 kg / castor set	A	192,–	15,–	207,–
Heavy-duty Castor Set, polyamide, Load capacity 2550 kg / castor set	A	379,–	15,–	394,–
Skip Body Welded Oil and Watertight	A	121,–	0,–	121,–
BKM 150, painted	A	1801,–	459,–	2260,–
Lid, galvanized	A	271,–	36,–	307,–
Castor Set, polyamide, Load capacity 1350 kg / castor set	A	192,–	15,–	207,–
Heavy-duty Castor Set, polyamide, Load capacity 2550 kg / castor set	A	379,–	15,–	394,–
Skip Body Welded Oil and Watertight	A	121,–	0,–	121,–
BKM 150, hot-dip galvanized	A	2444,–	459,–	2903,–
Lid, galvanized	A	271,–	36,–	307,–
Castor Set, polyamide, Load capacity 1350 kg / castor set	A	192,–	15,–	207,–
Heavy-duty Castor Set, polyamide, Load capacity 2550 kg / castor set	A	379,–	15,–	394,–
Skip Body Welded Oil and Watertight	A	121,–	0,–	121,–
BKM 200, painted	A	2240,–	459,–	2699,–
Lid, galvanized	A	302,–	157,–	459,–
Castor Set, polyamide, Load capacity 1350 kg / castor set	A	192,–	15,–	207,–
Heavy-duty Castor Set, polyamide, Load capacity 2550 kg / castor set	A	379,–	15,–	394,–
Skip Body Welded Oil and Watertight	A	121,–	0,–	121,–
Lid, galvanized	A	302,–	157,–	459,–
Castor Set, polyamide, Load capacity 1350 kg / castor set	A	192,–	15,–	207,–
Heavy-duty Castor Set, polyamide, Load capacity 2550 kg / castor set	A	379,–	15,–	394,–
Skip Body Welded Oil and Watertight	A	121,–	0,–	121,–

Traverse For Stacking Tippers Type BKT	Category	Price	Freight charges	Price including freight charges
BKT 30, painted	A	368,–	274,–	642,–
Traverse Stand Type TS, hot-dip galvanized	A	78,–	9,–	87,–
BKT 55, painted	A	390,–	274,–	664,–
Traverse Stand Type TS, hot-dip galvanized	A	78,–	10,–	88,–
BKT 70, painted	A	390,–	274,–	664,–
Traverse Stand Type TS, hot-dip galvanized	A	78,–	10,–	88,–
BKT 90, painted	A	392,–	274,–	666,–
Traverse Stand Type TS, hot-dip galvanized	A	78,–	10,–	88,–
BKT 150, painted	A	631,–	274,–	905,–
Traverse Stand Type TS, hot-dip galvanized	A	78,–	10,–	88,–
BKT 200, painted	A	696,–	274,–	970,–
Traverse Stand Type TS, hot-dip galvanized	A	78,–	10,–	88,–

Shovel Type BSE	Category	Price	Freight charges	Price including freight charges
BSE 50, painted	A	1486,–	383,–	1869,–
BSE 75, painted	A	1769,–	383,–	2152,–
BSE 100, painted	A	2219,–	459,–	2678,–
BSE 150, painted	A	2507,–	459,–	2966,–
BSE 200, painted	A	2786,–	624,–	3410,–
BSE 250, painted	A	3433,–	677,–	4110,–

Prices in EUR, valid EXW DE-46354 Südlohn, DE-38820 Halberstadt, unpacked
Freight charges valid CPT Great Britain, islands & the following post code areas excluded: IC, ZE

BAUER GmbH
Eichendorffstr. 62
46354 Südlohn, Germany

Tel. +49 2862 70 90
info@bauer-suedlohn.com
www.bauer-suedlohn.com

Geschäftsführer
Patrick Bauer, Pascal Bauer
Amtsgericht Coesfeld HRB 5259

TÜVNORD
TÜV NORD CERT GmbH
DIN EN ISO 9001
tuev-nord.de

Price List 0726 en-GB
Forklift Truck Attachments

Shovel Type BSI	Category	Price	Freight charges	Price including freight charges
BSI 50, painted	A	1257,–	274,–	1531,–
BSI 75, painted	A	1424,–	383,–	1807,–
BSI 100, painted	A	1786,–	383,–	2169,–

Stacking Tipper Type BSK	Category	Price	Freight charges	Price including freight charges
BSK 30, painted	A	265,–	192,–	457,–
Lid, galvanized	A	69,–	12,–	81,–
Castor Set, polyamide, Load capacity 1350 kg / castor set	A	192,–	15,–	207,–
Skip Body Welded Oil and Watertight	A	78,–	0,–	78,–
Set of 5 self-adhesive stickers with symbols for: glass, paper, plastic, metal, residual waste	A	29,–	on request	on request
BSK 30, hot-dip galvanized	A	320,–	192,–	512,–
Lid, galvanized	A	69,–	12,–	81,–
Castor Set, polyamide, Load capacity 1350 kg / castor set	A	192,–	15,–	207,–
Skip Body Welded Oil and Watertight	A	78,–	0,–	78,–
Set of 5 self-adhesive stickers with symbols for: glass, paper, plastic, metal, residual waste	A	29,–	on request	on request
BSK 55, painted	A	332,–	192,–	524,–
Lid, galvanized	A	98,–	15,–	113,–
Castor Set, polyamide, Load capacity 1350 kg / castor set	A	192,–	15,–	207,–
Skip Body Welded Oil and Watertight	A	78,–	0,–	78,–
Set of 5 self-adhesive stickers with symbols for: glass, paper, plastic, metal, residual waste	A	29,–	on request	on request
BSK 55, hot-dip galvanized	A	405,–	192,–	597,–
Lid, galvanized	A	98,–	15,–	113,–
Castor Set, polyamide, Load capacity 1350 kg / castor set	A	192,–	15,–	207,–
Skip Body Welded Oil and Watertight	A	78,–	0,–	78,–
Set of 5 self-adhesive stickers with symbols for: glass, paper, plastic, metal, residual waste	A	29,–	on request	on request
BSK 70, painted	A	352,–	192,–	544,–
Lid, galvanized	A	122,–	15,–	137,–
Castor Set, polyamide, Load capacity 1350 kg / castor set	A	192,–	15,–	207,–
Skip Body Welded Oil and Watertight	A	78,–	0,–	78,–
Set of 5 self-adhesive stickers with symbols for: glass, paper, plastic, metal, residual waste	A	29,–	on request	on request
BSK 70, hot-dip galvanized	A	457,–	192,–	649,–
Lid, galvanized	A	122,–	15,–	137,–
Castor Set, polyamide, Load capacity 1350 kg / castor set	A	192,–	15,–	207,–
Skip Body Welded Oil and Watertight	A	78,–	0,–	78,–
Set of 5 self-adhesive stickers with symbols for: glass, paper, plastic, metal, residual waste	A	29,–	on request	on request
BSK 90, painted	A	379,–	192,–	571,–
Lid, galvanized	A	166,–	18,–	184,–
Castor Set, polyamide, Load capacity 1350 kg / castor set	A	192,–	15,–	207,–
Skip Body Welded Oil and Watertight	A	78,–	0,–	78,–
Set of 5 self-adhesive stickers with symbols for: glass, paper, plastic, metal, residual waste	A	29,–	on request	on request
BSK 90, hot-dip galvanized	A	487,–	274,–	761,–
Lid, galvanized	A	166,–	18,–	184,–
Castor Set, polyamide, Load capacity 1350 kg / castor set	A	192,–	15,–	207,–
Skip Body Welded Oil and Watertight	A	78,–	0,–	78,–
Set of 5 self-adhesive stickers with symbols for: glass, paper, plastic, metal, residual waste	A	29,–	on request	on request
BSK 150, painted	A	871,–	274,–	1145,–

Prices in EUR, valid EXW DE-46354 Südlohn, DE-38820 Halberstadt, unpacked
Freight charges valid CPT Great Britain, islands & the following post code areas excluded: IC, ZE

BAUER GmbH
Eichendorffstr. 62
46354 Südlohn, Germany

Tel. +49 2862 70 90
info@bauer-suedlohn.com
www.bauer-suedlohn.com

Geschäftsführer
Patrick Bauer, Pascal Bauer
Amtsgericht Coesfeld HRB 5259

TÜVNORD
TÜV NORD CERT GmbH
DIN EN ISO 9001
tuev-nord.de

Price List 0726 en-GB
Forklift Truck Attachments

Stacking Tipper Type BSK	Category	Price	Freight charges	Price including freight charges
Lid, galvanized	A	223,–	21,–	244,–
Castor Set, polyamide, Load capacity 1350 kg / castor set	A	192,–	15,–	207,–
Skip Body Welded Oil and Watertight	A	121,–	0,–	121,–
Set of 5 self-adhesive stickers with symbols for: glass, paper, plastic, metal, residual waste	A	29,–	on request	on request
BSK 150, hot-dip galvanized	A	1019,–	274,–	1293,–
Lid, galvanized	A	223,–	21,–	244,–
Castor Set, polyamide, Load capacity 1350 kg / castor set	A	192,–	15,–	207,–
Skip Body Welded Oil and Watertight	A	121,–	0,–	121,–
Set of 5 self-adhesive stickers with symbols for: glass, paper, plastic, metal, residual waste	A	29,–	on request	on request
BSK 200, painted	A	934,–	274,–	1208,–
Lid, galvanized	A	284,–	26,–	310,–
Castor Set, polyamide, Load capacity 1350 kg / castor set	A	192,–	15,–	207,–
Skip Body Welded Oil and Watertight	A	121,–	0,–	121,–
Set of 5 self-adhesive stickers with symbols for: glass, paper, plastic, metal, residual waste	A	29,–	on request	on request
BSK 200, hot-dip galvanized	A	1169,–	274,–	1443,–
Lid, galvanized	A	284,–	26,–	310,–
Castor Set, polyamide, Load capacity 1350 kg / castor set	A	192,–	15,–	207,–
Skip Body Welded Oil and Watertight	A	121,–	0,–	121,–
Set of 5 self-adhesive stickers with symbols for: glass, paper, plastic, metal, residual waste	A	29,–	on request	on request

Lattice Tilting Container Type BSK-G	Category	Price	Freight charges	Price including freight charges
BSK-G 90, painted	A	344,–	192,–	536,–
Lid, galvanized	A	166,–	18,–	184,–
Castor Set, polyamide, Load capacity 1350 kg / castor set	A	192,–	15,–	207,–
BSK-G 90, hot-dip galvanized	A	419,–	192,–	611,–
Lid, galvanized	A	166,–	18,–	184,–
Castor Set, polyamide, Load capacity 1350 kg / castor set	A	192,–	15,–	207,–

Swarf Stacking Tipper Type BSL	Category	Price	Freight charges	Price including freight charges
BSL 30, painted	A	590,–	192,–	782,–
Lid, galvanized	A	69,–	12,–	81,–
Castor Set, polyamide, Load capacity 1350 kg / castor set	A	192,–	15,–	207,–
BSL 30, hot-dip galvanized	A	679,–	192,–	871,–
Lid, galvanized	A	69,–	12,–	81,–
Castor Set, polyamide, Load capacity 1350 kg / castor set	A	192,–	15,–	207,–
BSL 55, painted	A	726,–	274,–	1000,–
Lid, galvanized	A	98,–	15,–	113,–
Castor Set, polyamide, Load capacity 1350 kg / castor set	A	192,–	15,–	207,–
BSL 55, hot-dip galvanized	A	852,–	274,–	1126,–
Lid, galvanized	A	98,–	15,–	113,–
Castor Set, polyamide, Load capacity 1350 kg / castor set	A	192,–	15,–	207,–
BSL 70, painted	A	763,–	274,–	1037,–
Lid, galvanized	A	122,–	15,–	137,–
Castor Set, polyamide, Load capacity 1350 kg / castor set	A	192,–	15,–	207,–
BSL 70, hot-dip galvanized	A	912,–	274,–	1186,–

Prices in EUR, valid EXW DE-46354 Südlohn, DE-38820 Halberstadt, unpacked
Freight charges valid CPT Great Britain, islands & the following post code areas excluded: IC, ZE

BAUER GmbH
Eichendorffstr. 62
46354 Südlohn, Germany

Tel. +49 2862 70 90
info@bauer-suedlohn.com
www.bauer-suedlohn.com

Geschäftsführer
Patrick Bauer, Pascal Bauer
Amtsgericht Coesfeld HRB 5259

TÜVNORD
TÜV NORD CERT GmbH
DIN EN ISO 9001
tuev-nord.de

Price List 0726 en-GB
Forklift Truck Attachments

Swarf Stacking Tipper Type BSL	Category	Price	Freight charges	Price including freight charges
Lid, galvanized	A	122,–	15,–	137,–
Castor Set, polyamide, Load capacity 1350 kg / castor set	A	192,–	15,–	207,–
BSL 90, painted	A	830,–	274,–	1104,–
Lid, galvanized	A	166,–	18,–	184,–
Castor Set, polyamide, Load capacity 1350 kg / castor set	A	192,–	15,–	207,–
BSL 90, hot-dip galvanized	A	1004,–	274,–	1278,–
Lid, galvanized	A	166,–	18,–	184,–
Castor Set, polyamide, Load capacity 1350 kg / castor set	A	192,–	15,–	207,–
BSL 150, painted	A	1227,–	274,–	1501,–
Lid, galvanized	A	223,–	21,–	244,–
Castor Set, polyamide, Load capacity 1350 kg / castor set	A	192,–	15,–	207,–
BSL 150, hot-dip galvanized	A	1490,–	383,–	1873,–
Lid, galvanized	A	223,–	21,–	244,–
Castor Set, polyamide, Load capacity 1350 kg / castor set	A	192,–	15,–	207,–
BSL 200, painted	A	1327,–	383,–	1710,–
Lid, galvanized	A	284,–	26,–	310,–
Castor Set, polyamide, Load capacity 1350 kg / castor set	A	192,–	15,–	207,–
BSL 200, hot-dip galvanized	A	1792,–	383,–	2175,–
Lid, galvanized	A	284,–	26,–	310,–
Castor Set, polyamide, Load capacity 1350 kg / castor set	A	192,–	15,–	207,–

Shovel Type BSM	Category	Price	Freight charges	Price including freight charges
BSM 50, painted	A	1486,–	274,–	1760,–
BSM 75, painted	A	1769,–	383,–	2152,–
BSM 100, painted	A	2219,–	459,–	2678,–
BSM 150, painted	A	2507,–	459,–	2966,–
BSM 200, painted	A	2786,–	624,–	3410,–
BSM 250, painted	A	3433,–	677,–	4110,–

Swarf Stacking Tipper Type BSS	Category	Price	Freight charges	Price including freight charges
BSS 30, painted	A	422,–	192,–	614,–
Lid, galvanized	A	69,–	12,–	81,–
Castor Set, polyamide, Load capacity 1350 kg / castor set	A	192,–	15,–	207,–
BSS 30, hot-dip galvanized	A	490,–	192,–	682,–
Lid, galvanized	A	69,–	12,–	81,–
Castor Set, polyamide, Load capacity 1350 kg / castor set	A	192,–	15,–	207,–
BSS 55, painted	A	523,–	192,–	715,–
Lid, galvanized	A	98,–	15,–	113,–
Castor Set, polyamide, Load capacity 1350 kg / castor set	A	192,–	15,–	207,–
BSS 55, hot-dip galvanized	A	648,–	192,–	840,–
Lid, galvanized	A	98,–	15,–	113,–
Castor Set, polyamide, Load capacity 1350 kg / castor set	A	192,–	15,–	207,–
BSS 70, painted	A	561,–	192,–	753,–
Lid, galvanized	A	122,–	15,–	137,–
Castor Set, polyamide, Load capacity 1350 kg / castor set	A	192,–	15,–	207,–

Prices in EUR, valid EXW DE-46354 Südlohn, DE-38820 Halberstadt, unpacked
Freight charges valid CPT Great Britain, islands & the following post code areas excluded: IC, ZE

BAUER GmbH
Eichendorffstr. 62
46354 Südlohn, Germany

Tel. +49 2862 70 90
info@bauer-suedlohn.com
www.bauer-suedlohn.com

Geschäftsführer
Patrick Bauer, Pascal Bauer
Amtsgericht Coesfeld HRB 5259

TÜVNORD
TÜV NORD CERT GmbH
DIN EN ISO 9001
tuev-nord.de

Price List 0726 en-GB
Forklift Truck Attachments

Swarf Stacking Tipper Type BSS	Category	Price	Freight charges	Price including freight charges
BSS 70, hot-dip galvanized	A	708,–	274,–	982,–
Lid, galvanized	A	122,–	15,–	137,–
Castor Set, polyamide, Load capacity 1350 kg / castor set	A	192,–	15,–	207,–
BSS 90, painted	A	597,–	274,–	871,–
Lid, galvanized	A	166,–	18,–	184,–
Castor Set, polyamide, Load capacity 1350 kg / castor set	A	192,–	15,–	207,–
BSS 90, hot-dip galvanized	A	765,–	274,–	1039,–
Lid, galvanized	A	166,–	18,–	184,–
Castor Set, polyamide, Load capacity 1350 kg / castor set	A	192,–	15,–	207,–
BSS 150, painted	A	907,–	274,–	1181,–
Lid, galvanized	A	223,–	21,–	244,–
Castor Set, polyamide, Load capacity 1350 kg / castor set	A	192,–	15,–	207,–
BSS 150, hot-dip galvanized	A	1166,–	274,–	1440,–
Lid, galvanized	A	223,–	21,–	244,–
Castor Set, polyamide, Load capacity 1350 kg / castor set	A	192,–	15,–	207,–
BSS 200, painted	A	1024,–	274,–	1298,–
Lid, galvanized	A	284,–	26,–	310,–
Castor Set, polyamide, Load capacity 1350 kg / castor set	A	192,–	15,–	207,–
BSS 200, hot-dip galvanized	A	1371,–	383,–	1754,–
Lid, galvanized	A	284,–	26,–	310,–
Castor Set, polyamide, Load capacity 1350 kg / castor set	A	192,–	15,–	207,–

Traverse For Stacking Tippers Type BST	Category	Price	Freight charges	Price including freight charges
BST 30, painted	A	332,–	192,–	524,–
Traverse Stand Type TS, hot-dip galvanized	A	78,–	9,–	87,–
BST 55, painted	A	354,–	192,–	546,–
Traverse Stand Type TS, hot-dip galvanized	A	78,–	10,–	88,–
BST 70, painted	A	354,–	192,–	546,–
Traverse Stand Type TS, hot-dip galvanized	A	78,–	10,–	88,–
BST 90, painted	A	368,–	192,–	560,–
Traverse Stand Type TS, hot-dip galvanized	A	78,–	10,–	88,–
BST 150, painted	A	551,–	274,–	825,–
Traverse Stand Type TS, hot-dip galvanized	A	78,–	10,–	88,–
BST 200, painted	A	612,–	274,–	886,–
Traverse Stand Type TS, hot-dip galvanized	A	78,–	10,–	88,–

Traverse For Stacking Tippers Type BST-H	Category	Price	Freight charges	Price including freight charges
BST-H 30, painted	A	2127,–	274,–	2401,–
Traverse Stand Type TS, hot-dip galvanized	A	78,–	9,–	87,–
BST-H 55, painted	A	2257,–	274,–	2531,–
Traverse Stand Type TS, hot-dip galvanized	A	78,–	9,–	87,–
BST-H 70, painted	A	2257,–	274,–	2531,–
Traverse Stand Type TS, hot-dip galvanized	A	78,–	9,–	87,–
BST-H 90, painted	A	2374,–	274,–	2648,–
Traverse Stand Type TS, hot-dip galvanized	A	78,–	9,–	87,–

Prices in EUR, valid EXW DE-46354 Südlohn, DE-38820 Halberstadt, unpacked
Freight charges valid CPT Great Britain, islands & the following post code areas excluded: IC, ZE

BAUER GmbH
Eichendorffstr. 62
46354 Südlohn, Germany

Tel. +49 2862 70 90
info@bauer-suedlohn.com
www.bauer-suedlohn.com

Geschäftsführer
Patrick Bauer, Pascal Bauer
Amtsgericht Coesfeld HRB 5259

TÜVNORD
TÜV NORD CERT GmbH
DIN EN ISO 9001
tuev-nord.de

Price List 0726 en-GB
Forklift Truck Attachments

Traverse For Stacking Tippers Type BST-H	Category	Price	Freight charges	Price including freight charges
BST-H 150, painted	A	2700,–	383,–	3083,–
Traverse Stand Type TS, hot-dip galvanized	A	78,–	10,–	88,–
BST-H 200, painted	A	2972,–	383,–	3355,–
Traverse Stand Type TS, hot-dip galvanized	A	78,–	10,–	88,–

Traverse For Stacking Tippers Type BST-U	Category	Price	Freight charges	Price including freight charges
BST-U 30, painted	A	956,–	274,–	1230,–
BST-U 55, painted	A	1020,–	274,–	1294,–
BST-U 70, painted	A	1020,–	274,–	1294,–
BST-U 90, painted	A	1047,–	274,–	1321,–

Beam Traverse Type BT	Category	Price	Freight charges	Price including freight charges
BT 3001, painted	A	1877,–	356,–	2233,–
Support frames, hot-dip galvanized	A	276,–	192,–	468,–
BT 3002, painted	A	2117,–	356,–	2473,–
Support frames, hot-dip galvanized	A	276,–	192,–	468,–
BT 3003, painted	A	2276,–	356,–	2632,–
Support frames, hot-dip galvanized	A	276,–	192,–	468,–
BT 3005, painted	A	2596,–	464,–	3060,–
Support frames, hot-dip galvanized	A	276,–	192,–	468,–

Filling Hopper Type BTM	Category	Price	Freight charges	Price including freight charges
BTM, painted	A	2461,–	459,–	2920,–

Filling Hopper Type BTS	Category	Price	Freight charges	Price including freight charges
BTS, painted	A	2107,–	459,–	2566,–

Bin Type C	Category	Price	Freight charges	Price including freight charges
C 30, painted	A	422,–	192,–	614,–
C 30, hot-dip galvanized	A	463,–	192,–	655,–
C 80, painted	A	607,–	192,–	799,–
C 80, hot-dip galvanized	A	653,–	192,–	845,–

Swarf Bin Type CS	Category	Price	Freight charges	Price including freight charges
CS 30, painted	A	486,–	192,–	678,–
CS 30, hot-dip galvanized	A	532,–	192,–	724,–
CS 80, painted	A	717,–	192,–	909,–
CS 80, hot-dip galvanized	A	766,–	274,–	1040,–

Shovel Type DGS	Category	Price	Freight charges	Price including freight charges
DGS 500, painted	A	2655,–	383,–	3038,–
DGS 700, painted	A	2685,–	383,–	3068,–
DGS 950, painted	A	2723,–	459,–	3182,–
DGS 1200, painted	A	2924,–	459,–	3383,–

Prices in EUR, valid EXW DE-46354 Südlohn, DE-38820 Halberstadt, unpacked
Freight charges valid CPT Great Britain, islands & the following post code areas excluded: IC, ZE

BAUER GmbH
Eichendorffstr. 62
46354 Südlohn, Germany

Tel. +49 2862 70 90
info@bauer-suedlohn.com
www.bauer-suedlohn.com

Geschäftsführer
Patrick Bauer, Pascal Bauer
Amtsgericht Coesfeld HRB 5259

TÜVNORD
TÜV NORD CERT GmbH
DIN EN ISO 9001
tuev-nord.de

Price List 0726 en-GB
Forklift Truck Attachments

Tilting Container Type DUO	Category	Price	Freight charges	Price including freight charges
DUO, painted	A	1867,–	383,–	2250,–
Lid, galvanized	A	236,–	27,–	263,–
Castor Set, polyamide, Load capacity 1350 kg / castor set	A	192,–	15,–	207,–
Set of 5 self-adhesive stickers with symbols for: glass, paper, plastic, metal, residual waste	A	29,–	on request	on request

Tilting Container Type EXPO®	Category	Price	Freight charges	Price including freight charges
EXPO 150, painted	A	608,–	192,–	800,–
Lid, galvanized	A	174,–	18,–	192,–
Castor Set, polyamide, Load capacity 1050 kg / castor set	A	156,–	15,–	171,–
Skip Body Welded Oil and Watertight	A	78,–	0,–	78,–
EXPO 150, hot-dip galvanized	A	717,–	192,–	909,–
Lid, galvanized	A	174,–	18,–	192,–
Castor Set, polyamide, Load capacity 1050 kg / castor set	A	156,–	15,–	171,–
Skip Body Welded Oil and Watertight	A	78,–	0,–	78,–
EXPO 225, painted	A	662,–	192,–	854,–
Lid, galvanized	A	174,–	18,–	192,–
Castor Set, polyamide, Load capacity 1050 kg / castor set	A	156,–	15,–	171,–
Skip Body Welded Oil and Watertight	A	78,–	0,–	78,–
EXPO 225, hot-dip galvanized	A	785,–	192,–	977,–
Lid, galvanized	A	174,–	18,–	192,–
Castor Set, polyamide, Load capacity 1050 kg / castor set	A	156,–	15,–	171,–
Skip Body Welded Oil and Watertight	A	78,–	0,–	78,–
EXPO 275, painted	A	691,–	192,–	883,–
Lid, galvanized	A	174,–	18,–	192,–
Castor Set, polyamide, Load capacity 1050 kg / castor set	A	156,–	15,–	171,–
Skip Body Welded Oil and Watertight	A	78,–	0,–	78,–
EXPO 275, hot-dip galvanized	A	826,–	192,–	1018,–
Lid, galvanized	A	174,–	18,–	192,–
Castor Set, polyamide, Load capacity 1050 kg / castor set	A	156,–	15,–	171,–
Skip Body Welded Oil and Watertight	A	78,–	0,–	78,–
EXPO 300, painted	A	623,–	274,–	897,–
Lid, galvanized	A	174,–	18,–	192,–
Castor Set, polyamide, Load capacity 1350 kg / castor set	A	192,–	15,–	207,–
Skip Body Welded Oil and Watertight	A	78,–	0,–	78,–
EXPO 300, hot-dip galvanized	A	798,–	274,–	1072,–
Lid, galvanized	A	174,–	18,–	192,–
Castor Set, polyamide, Load capacity 1350 kg / castor set	A	192,–	15,–	207,–
Skip Body Welded Oil and Watertight	A	78,–	0,–	78,–
EXPO 600, painted	A	733,–	274,–	1007,–
Lid, galvanized	A	196,–	22,–	218,–
Castor Set, polyamide, Load capacity 1350 kg / castor set	A	192,–	15,–	207,–
Skip Body Welded Oil and Watertight	A	78,–	0,–	78,–
EXPO 600, hot-dip galvanized	A	879,–	274,–	1153,–
Lid, galvanized	A	196,–	22,–	218,–
Castor Set, polyamide, Load capacity 1350 kg / castor set	A	192,–	15,–	207,–
Skip Body Welded Oil and Watertight	A	78,–	0,–	78,–

Prices in EUR, valid EXW DE-46354 Südlohn, DE-38820 Halberstadt, unpacked
Freight charges valid CPT Great Britain, islands & the following post code areas excluded: IC, ZE

BAUER GmbH
Eichendorffstr. 62
46354 Südlohn, Germany

Tel. +49 2862 70 90
info@bauer-suedlohn.com
www.bauer-suedlohn.com

Geschäftsführer
Patrick Bauer, Pascal Bauer
Amtsgericht Coesfeld HRB 5259

TÜVNORD
TÜV NORD CERT GmbH
DIN EN ISO 9001
tuev-nord.de

Price List 0726 en-GB
Forklift Truck Attachments

Tilting Container Type EXPO®	Category	Price	Freight charges	Price including freight charges
EXPO 900, painted	A	818,–	274,–	1092,–
Lid, galvanized	A	223,–	27,–	250,–
Castor Set, polyamide, Load capacity 1350 kg / castor set	A	192,–	15,–	207,–
Skip Body Welded Oil and Watertight	A	78,–	0,–	78,–
EXPO 900, hot-dip galvanized	A	964,–	274,–	1238,–
Lid, galvanized	A	223,–	27,–	250,–
Castor Set, polyamide, Load capacity 1350 kg / castor set	A	192,–	15,–	207,–
Skip Body Welded Oil and Watertight	A	78,–	0,–	78,–
EXPO 1200, painted	A	885,–	383,–	1268,–
Lid, galvanized	A	223,–	26,–	249,–
Castor Set, polyamide, Load capacity 1350 kg / castor set	A	192,–	15,–	207,–
Skip Body Welded Oil and Watertight	A	121,–	0,–	121,–
EXPO 1200, hot-dip galvanized	A	1042,–	383,–	1425,–
Lid, galvanized	A	223,–	26,–	249,–
Castor Set, polyamide, Load capacity 1350 kg / castor set	A	192,–	15,–	207,–
Skip Body Welded Oil and Watertight	A	121,–	0,–	121,–
EXPO 1700, painted	A	1202,–	383,–	1585,–
Lid, galvanized	A	276,–	33,–	309,–
Castor Set, polyamide, Load capacity 1350 kg / castor set	A	192,–	15,–	207,–
Skip Body Welded Oil and Watertight	A	121,–	0,–	121,–
EXPO 1700, hot-dip galvanized	A	1435,–	383,–	1818,–
Lid, galvanized	A	276,–	33,–	309,–
Castor Set, polyamide, Load capacity 1350 kg / castor set	A	192,–	15,–	207,–
Skip Body Welded Oil and Watertight	A	121,–	0,–	121,–
EXPO 2100, painted	A	1325,–	383,–	1708,–
Lid, galvanized	A	360,–	39,–	399,–
Castor Set, polyamide, Load capacity 1350 kg / castor set	A	192,–	15,–	207,–
Skip Body Welded Oil and Watertight	A	121,–	0,–	121,–
EXPO 2100, hot-dip galvanized	A	1606,–	383,–	1989,–
Lid, galvanized	A	360,–	39,–	399,–
Castor Set, polyamide, Load capacity 1350 kg / castor set	A	192,–	15,–	207,–
Skip Body Welded Oil and Watertight	A	121,–	0,–	121,–

Swarf Tilting Container Type EXPO®-E	Category	Price	Freight charges	Price including freight charges
EXPO-E 150, painted	A	729,–	192,–	921,–
Lid, galvanized	A	174,–	18,–	192,–
Castor Set, polyamide, Load capacity 1050 kg / castor set	A	156,–	15,–	171,–
EXPO-E 150, hot-dip galvanized	A	837,–	192,–	1029,–
Lid, galvanized	A	174,–	18,–	192,–
Castor Set, polyamide, Load capacity 1050 kg / castor set	A	156,–	15,–	171,–
EXPO-E 225, painted	A	782,–	192,–	974,–
Lid, galvanized	A	174,–	18,–	192,–
Castor Set, polyamide, Load capacity 1050 kg / castor set	A	156,–	15,–	171,–
EXPO-E 225, hot-dip galvanized	A	907,–	192,–	1099,–
Lid, galvanized	A	174,–	18,–	192,–
Castor Set, polyamide, Load capacity 1050 kg / castor set	A	156,–	15,–	171,–

Prices in EUR, valid EXW DE-46354 Südlohn, DE-38820 Halberstadt, unpacked
Freight charges valid CPT Great Britain, islands & the following post code areas excluded: IC, ZE

BAUER GmbH
Eichendorffstr. 62
46354 Südlohn, Germany

Tel. +49 2862 70 90
info@bauer-suedlohn.com
www.bauer-suedlohn.com

Geschäftsführer
Patrick Bauer, Pascal Bauer
Amtsgericht Coesfeld HRB 5259

TÜVNORD
TÜV NORD CERT GmbH
DIN EN ISO 9001
tuev-nord.de

Price List 0726 en-GB
Forklift Truck Attachments

Swarf Tilting Container Type EXPO®-E	Category	Price	Freight charges	Price including freight charges
EXPO-E 275, painted	A	812,–	192,–	1004,–
Lid, galvanized	A	174,–	18,–	192,–
Castor Set, polyamide, Load capacity 1050 kg / castor set	A	156,–	15,–	171,–
EXPO-E 275, hot-dip galvanized	A	944,–	192,–	1136,–
Lid, galvanized	A	174,–	18,–	192,–
Castor Set, polyamide, Load capacity 1050 kg / castor set	A	156,–	15,–	171,–
EXPO-E 300, painted	A	744,–	274,–	1018,–
Lid, galvanized	A	174,–	18,–	192,–
Castor Set, polyamide, Load capacity 1350 kg / castor set	A	192,–	15,–	207,–
EXPO-E 300, hot-dip galvanized	A	919,–	274,–	1193,–
Lid, galvanized	A	174,–	18,–	192,–
Castor Set, polyamide, Load capacity 1350 kg / castor set	A	192,–	15,–	207,–
EXPO-E 600, painted	A	853,–	274,–	1127,–
Lid, galvanized	A	196,–	22,–	218,–
Castor Set, polyamide, Load capacity 1350 kg / castor set	A	192,–	15,–	207,–
EXPO-E 600, hot-dip galvanized	A	999,–	274,–	1273,–
Lid, galvanized	A	196,–	22,–	218,–
Castor Set, polyamide, Load capacity 1350 kg / castor set	A	192,–	15,–	207,–
EXPO-E 900, painted	A	938,–	274,–	1212,–
Lid, galvanized	A	223,–	27,–	250,–
Castor Set, polyamide, Load capacity 1350 kg / castor set	A	192,–	15,–	207,–
EXPO-E 900, hot-dip galvanized	A	1085,–	274,–	1359,–
Lid, galvanized	A	223,–	27,–	250,–
Castor Set, polyamide, Load capacity 1350 kg / castor set	A	192,–	15,–	207,–
EXPO-E 1200, painted	A	1048,–	383,–	1431,–
Lid, galvanized	A	223,–	26,–	249,–
Castor Set, polyamide, Load capacity 1350 kg / castor set	A	192,–	15,–	207,–
EXPO-E 1200, hot-dip galvanized	A	1204,–	383,–	1587,–
Lid, galvanized	A	223,–	26,–	249,–
Castor Set, polyamide, Load capacity 1350 kg / castor set	A	192,–	15,–	207,–
EXPO-E 1700, painted	A	1365,–	383,–	1748,–
Lid, galvanized	A	276,–	33,–	309,–
Castor Set, polyamide, Load capacity 1350 kg / castor set	A	192,–	15,–	207,–
EXPO-E 1700, hot-dip galvanized	A	1598,–	383,–	1981,–
Lid, galvanized	A	276,–	33,–	309,–
Castor Set, polyamide, Load capacity 1350 kg / castor set	A	192,–	15,–	207,–
EXPO-E 2100, painted	A	1488,–	383,–	1871,–
Lid, galvanized	A	360,–	39,–	399,–
Castor Set, polyamide, Load capacity 1350 kg / castor set	A	192,–	15,–	207,–
EXPO-E 2100, hot-dip galvanized	A	1768,–	383,–	2151,–
Lid, galvanized	A	360,–	39,–	399,–
Castor Set, polyamide, Load capacity 1350 kg / castor set	A	192,–	15,–	207,–

Container With Drop Away Base Type FB	Category	Price	Freight charges	Price including freight charges
FB 500, painted	A	809,–	274,–	1083,–
Lid, galvanized	A	196,–	15,–	211,–

Prices in EUR, valid EXW DE-46354 Südlohn, DE-38820 Halberstadt, unpacked
Freight charges valid CPT Great Britain, islands & the following post code areas excluded: IC, ZE

BAUER GmbH
Eichendorffstr. 62
46354 Südlohn, Germany

Tel. +49 2862 70 90
info@bauer-suedlohn.com
www.bauer-suedlohn.com

Geschäftsführer
Patrick Bauer, Pascal Bauer
Amtsgericht Coesfeld HRB 5259

TÜVNORD
TÜV NORD CERT GmbH
DIN EN ISO 9001
tuev-nord.de

Price List 0726 en-GB
Forklift Truck Attachments

Container With Drop Away Base Type FB	Category	Price	Freight charges	Price including freight charges
Castor Set, polyamide, Load capacity 1350 kg / castor set	A	192,–	15,–	207,–
Guiding Plates, galvanized	A	116,–	12,–	128,–
FB 500, hot-dip galvanized	A	994,–	274,–	1268,–
Lid, galvanized	A	196,–	15,–	211,–
Castor Set, polyamide, Load capacity 1350 kg / castor set	A	192,–	15,–	207,–
Guiding Plates, galvanized	A	116,–	12,–	128,–
FB 750, painted	A	880,–	274,–	1154,–
Lid, galvanized	A	196,–	15,–	211,–
Castor Set, polyamide, Load capacity 1350 kg / castor set	A	192,–	15,–	207,–
Guiding Plates, galvanized	A	116,–	12,–	128,–
FB 750, hot-dip galvanized	A	1075,–	274,–	1349,–
Lid, galvanized	A	196,–	15,–	211,–
Castor Set, polyamide, Load capacity 1350 kg / castor set	A	192,–	15,–	207,–
Guiding Plates, galvanized	A	116,–	12,–	128,–
FB 1000, painted	A	942,–	274,–	1216,–
Lid, galvanized	A	238,–	18,–	256,–
Castor Set, polyamide, Load capacity 1350 kg / castor set	A	192,–	15,–	207,–
Guiding Plates, galvanized	A	116,–	12,–	128,–
FB 1000, hot-dip galvanized	A	1157,–	274,–	1431,–
Lid, galvanized	A	238,–	18,–	256,–
Castor Set, polyamide, Load capacity 1350 kg / castor set	A	192,–	15,–	207,–
Guiding Plates, galvanized	A	116,–	12,–	128,–
FB 1500, painted	A	1105,–	383,–	1488,–
Lid, galvanized	A	351,–	21,–	372,–
Castor Set, polyamide, Load capacity 1350 kg / castor set	A	192,–	15,–	207,–
Guiding Plates, galvanized	A	116,–	12,–	128,–
FB 1500, hot-dip galvanized	A	1392,–	383,–	1775,–
Lid, galvanized	A	351,–	21,–	372,–
Castor Set, polyamide, Load capacity 1350 kg / castor set	A	192,–	15,–	207,–
Guiding Plates, galvanized	A	116,–	12,–	128,–
FB 2000, painted	A	1192,–	383,–	1575,–
Lid, galvanized	A	351,–	21,–	372,–
Castor Set, polyamide, Load capacity 1350 kg / castor set	A	192,–	15,–	207,–
Guiding Plates, galvanized	A	116,–	12,–	128,–
FB 2000, hot-dip galvanized	A	1512,–	383,–	1895,–
Lid, galvanized	A	351,–	21,–	372,–
Castor Set, polyamide, Load capacity 1350 kg / castor set	A	192,–	15,–	207,–
Guiding Plates, galvanized	A	116,–	12,–	128,–

Drum Tipper Type FD/L-HK	Category	Price	Freight charges	Price including freight charges
FD/L-HK, painted	B	2324,–	274,–	2598,–
FD/L-HK, hot-dip galvanized	B	2765,–	274,–	3039,–

Drum Tipper Type FD/L-K	Category	Price	Freight charges	Price including freight charges
FD/L-K, painted	B	2515,–	274,–	2789,–

Prices in EUR, valid EXW DE-46354 Südlohn, DE-38820 Halberstadt, unpacked
Freight charges valid CPT Great Britain, islands & the following post code areas excluded: IC, ZE

BAUER GmbH
Eichendorffstr. 62
46354 Südlohn, Germany

Tel. +49 2862 70 90
info@bauer-suedlohn.com
www.bauer-suedlohn.com

Geschäftsführer
Patrick Bauer, Pascal Bauer
Amtsgericht Coesfeld HRB 5259

TÜVNORD
TÜV NORD CERT GmbH
DIN EN ISO 9001
tuev-nord.de

Price List 0726 en-GB
Forklift Truck Attachments

Drum Tipper Type FD/L-K	Category	Price	Freight charges	Price including freight charges
FD/L-K, hot-dip galvanized	B	2965,–	274,–	3239,–

Drum Tipper Type FD-H	Category	Price	Freight charges	Price including freight charges
FD-H, painted	B	2593,–	192,–	2785,–
FD-H, hot-dip galvanized	B	2828,–	192,–	3020,–

Drum Tipper Type FD-HK	Category	Price	Freight charges	Price including freight charges
FD-HK, painted	B	1997,–	192,–	2189,–
FD-HK, hot-dip galvanized	B	2237,–	192,–	2429,–

Drum Tipper Type FD-K	Category	Price	Freight charges	Price including freight charges
FD-K, painted	B	2188,–	192,–	2380,–
FD-K, hot-dip galvanized	B	2437,–	192,–	2629,–

Drum Tipper Type FD-SK	Category	Price	Freight charges	Price including freight charges
FD-SK, painted	B	1997,–	192,–	2189,–
FD-SK, hot-dip galvanized	B	2237,–	192,–	2429,–

Drum Jack Type FH	Category	Price	Freight charges	Price including freight charges
FH-I 120, painted	B	1645,–	192,–	1837,–
FH-I 120, hot-dip galvanized	B	1823,–	192,–	2015,–
FH-I 220, painted	B	1645,–	192,–	1837,–
FH-I 220, hot-dip galvanized	B	1852,–	192,–	2044,–
FH-II 120, painted	B	2402,–	192,–	2594,–
FH-II 120, hot-dip galvanized	B	2673,–	192,–	2865,–
FH-II 220, painted	B	2402,–	192,–	2594,–
FH-II 220, hot-dip galvanized	B	2729,–	192,–	2921,–

Drum Gripper Type FK	Category	Price	Freight charges	Price including freight charges
FK-I, painted	B	1251,–	192,–	1443,–
FK-I, hot-dip galvanized	B	1524,–	192,–	1716,–
FK-II, painted	B	1488,–	274,–	1762,–
FK-II, hot-dip galvanized	B	1882,–	274,–	2156,–

Drum Clamp Type FKL	Category	Price	Freight charges	Price including freight charges
FKL, painted	B	480,–	74,–	554,–

Drum Tipper Type FLEX-HK	Category	Price	Freight charges	Price including freight charges
FLEX-HK, painted	B	2164,–	192,–	2356,–
Shelf Drum Pallet RP, galvanized	B	145,–	74,–	219,–
FLEX-HK, hot-dip galvanized	B	2338,–	192,–	2530,–
Shelf Drum Pallet RP, galvanized	B	145,–	74,–	219,–

Prices in EUR, valid EXW DE-46354 Südlohn, DE-38820 Halberstadt, unpacked
Freight charges valid CPT Great Britain, islands & the following post code areas excluded: IC, ZE

BAUER GmbH
Eichendorffstr. 62
46354 Südlohn, Germany

Tel. +49 2862 70 90
info@bauer-suedlohn.com
www.bauer-suedlohn.com

Geschäftsführer
Patrick Bauer, Pascal Bauer
Amtsgericht Coesfeld HRB 5259

TÜVNORD
TÜV NORD CERT GmbH
DIN EN ISO 9001
tuev-nord.de

Price List 0726 en-GB
Forklift Truck Attachments

Drum Tipper Type FLEX-K	Category	Price	Freight charges	Price including freight charges
FLEX-K, painted	B	2363,–	192,–	2555,–
Shelf Drum Pallet RP, galvanized	B	145,–	74,–	219,–
FLEX-K, hot-dip galvanized	B	2533,–	192,–	2725,–
Shelf Drum Pallet RP, galvanized	B	145,–	74,–	219,–

Drum Traverse Type FT/M	Category	Price	Freight charges	Price including freight charges
FT/M, galvanized	B	316,–	74,–	390,–

Drum Traverse Type FT/MK	Category	Price	Freight charges	Price including freight charges
FT/MK, galvanized	B	362,–	74,–	436,–

Drum Turner Type FW	Category	Price	Freight charges	Price including freight charges
FW-I, painted	B	1389,–	274,–	1663,–
FW-I, hot-dip galvanized	B	1803,–	274,–	2077,–
FW-II, painted	B	1945,–	274,–	2219,–
FW-II, hot-dip galvanized	B	2533,–	274,–	2807,–

Drum Turning Claw Type FWZ	Category	Price	Freight charges	Price including freight charges
FWZ-60, painted	B	1355,–	192,–	1547,–
FWZ-60, galvanized	B	1335,–	192,–	1527,–
FWZ-200, painted	B	1397,–	192,–	1589,–
FWZ-200, galvanized	B	1376,–	192,–	1568,–

Fork Extensions Type GG	Category	Price	Freight charges	Price including freight charges
GG 80/40 (1600 mm long), painted	A	541,–	192,–	733,–
GG 80/40 (1800 mm long), painted	A	570,–	192,–	762,–
GG 80/40 (2000 mm long), painted	A	601,–	192,–	793,–
GG 100/40 (1600 mm long), painted	A	541,–	192,–	733,–
GG 100/40 (1800 mm long), painted	A	570,–	192,–	762,–
GG 100/40 (2000 mm long), painted	A	601,–	192,–	793,–
GG 100/45 (1600 mm long), painted	A	541,–	192,–	733,–
GG 100/45 (1800 mm long), painted	A	570,–	192,–	762,–
GG 100/45 (2000 mm long), painted	A	601,–	192,–	793,–
GG 100/50 (1600 mm long), painted	A	541,–	192,–	733,–
GG 100/50 (1800 mm long), painted	A	570,–	192,–	762,–
GG 100/50 (2000 mm long), painted	A	601,–	274,–	875,–
GG 120/40 (1600 mm long), painted	A	570,–	192,–	762,–
GG 120/40 (1800 mm long), painted	A	601,–	274,–	875,–
GG 120/40 (2000 mm long), painted	A	645,–	274,–	919,–
GG 120/50 (1600 mm long), painted	A	570,–	192,–	762,–
GG 120/50 (1800 mm long), painted	A	601,–	274,–	875,–
GG 120/50 (2000 mm long), painted	A	645,–	274,–	919,–
GG 125/45 (1600 mm long), painted	A	570,–	192,–	762,–
GG 125/45 (1800 mm long), painted	A	601,–	274,–	875,–
GG 125/45 (2000 mm long), painted	A	645,–	274,–	919,–

Prices in EUR, valid EXW DE-46354 Südlohn, DE-38820 Halberstadt, unpacked
Freight charges valid CPT Great Britain, islands & the following post code areas excluded: IC, ZE

BAUER GmbH
Eichendorffstr. 62
46354 Südlohn, Germany

Tel. +49 2862 70 90
info@bauer-suedlohn.com
www.bauer-suedlohn.com

Geschäftsführer
Patrick Bauer, Pascal Bauer
Amtsgericht Coesfeld HRB 5259

TÜVNORD
TÜV NORD CERT GmbH
DIN EN ISO 9001
tuev-nord.de

Price List 0726 en-GB
Forklift Truck Attachments

Fork Extensions Type GG	Category	Price	Freight charges	Price including freight charges
GG 125/50 (1600 mm long), painted	A	570,–	192,–	762,–
GG 125/50 (1800 mm long), painted	A	601,–	274,–	875,–
GG 125/50 (2000 mm long), painted	A	645,–	274,–	919,–
GG 150/50 (1600 mm long), painted	A	634,–	274,–	908,–
GG 150/50 (1800 mm long), painted	A	680,–	274,–	954,–
GG 150/50 (2000 mm long), painted	A	713,–	274,–	987,–
GG 150/70 (1600 mm long), painted	A	634,–	274,–	908,–
GG 150/70 (1800 mm long), painted	A	680,–	274,–	954,–
GG 150/70 (2000 mm long), painted	A	713,–	274,–	987,–

Fork Extensions Type GO	Category	Price	Freight charges	Price including freight charges
GO 80/40 (1600 mm long), painted	A	390,–	192,–	582,–
GO 80/40 (1800 mm long), painted	A	396,–	192,–	588,–
GO 80/40 (2000 mm long), painted	A	411,–	192,–	603,–
GO 100/40 (1600 mm long), painted	A	390,–	192,–	582,–
GO 100/40 (1800 mm long), painted	A	396,–	192,–	588,–
GO 100/40 (2000 mm long), painted	A	411,–	192,–	603,–
GO 100/45 (1600 mm long), painted	A	390,–	192,–	582,–
GO 100/45 (1800 mm long), painted	A	396,–	192,–	588,–
GO 100/45 (2000 mm long), painted	A	411,–	192,–	603,–
GO 100/50 (1600 mm long), painted	A	390,–	192,–	582,–
GO 100/50 (1800 mm long), painted	A	396,–	192,–	588,–
GO 100/50 (2000 mm long), painted	A	411,–	192,–	603,–
GO 120/40 (1600 mm long), painted	A	396,–	192,–	588,–
GO 120/40 (1800 mm long), painted	A	418,–	192,–	610,–
GO 120/40 (2000 mm long), painted	A	435,–	192,–	627,–
GO 120/50 (1600 mm long), painted	A	396,–	192,–	588,–
GO 120/50 (1800 mm long), painted	A	418,–	192,–	610,–
GO 120/50 (2000 mm long), painted	A	435,–	192,–	627,–
GO 125/45 (1600 mm long), painted	A	396,–	192,–	588,–
GO 125/45 (1800 mm long), painted	A	418,–	192,–	610,–
GO 125/45 (2000 mm long), painted	A	435,–	192,–	627,–
GO 125/50 (1600 mm long), painted	A	396,–	192,–	588,–
GO 125/50 (1800 mm long), painted	A	418,–	192,–	610,–
GO 125/50 (2000 mm long), painted	A	435,–	192,–	627,–
GO 150/50 (1600 mm long), painted	A	475,–	192,–	667,–
GO 150/50 (1800 mm long), painted	A	516,–	192,–	708,–
GO 150/50 (2000 mm long), painted	A	555,–	192,–	747,–
GO 150/70 (1600 mm long), painted	A	475,–	192,–	667,–
GO 150/70 (1800 mm long), painted	A	516,–	192,–	708,–
GO 150/70 (2000 mm long), painted	A	555,–	192,–	747,–

Tilting Container Type GU	Category	Price	Freight charges	Price including freight charges
GU 300, painted	A	655,–	274,–	929,–
Lid, galvanized	A	98,–	18,–	116,–

Prices in EUR, valid EXW DE-46354 Südlohn, DE-38820 Halberstadt, unpacked
Freight charges valid CPT Great Britain, islands & the following post code areas excluded: IC, ZE

BAUER GmbH
Eichendorffstr. 62
46354 Südlohn, Germany

Tel. +49 2862 70 90
info@bauer-suedlohn.com
www.bauer-suedlohn.com

Geschäftsführer
Patrick Bauer, Pascal Bauer
Amtsgericht Coesfeld HRB 5259

TÜVNORD
TÜV NORD CERT GmbH
DIN EN ISO 9001
tuev-nord.de

Price List 0726 en-GB
Forklift Truck Attachments

Tilting Container Type GU	Category	Price	Freight charges	Price including freight charges
Castor Set, polyamide, Load capacity 1350 kg / castor set	A	192,–	15,–	207,–
Skip Body Welded Oil and Watertight	A	78,–	0,–	78,–
Crane lifting eyes for use with a crane	A	106,–	8,–	114,–
Support legs, 100 mm ground leeway	A	70,–	8,–	78,–
GU 300, hot-dip galvanized	A	866,–	274,–	1140,–
Lid, galvanized	A	98,–	18,–	116,–
Castor Set, polyamide, Load capacity 1350 kg / castor set	A	192,–	15,–	207,–
Skip Body Welded Oil and Watertight	A	78,–	0,–	78,–
Crane lifting eyes for use with a crane	A	106,–	8,–	114,–
Support legs, 100 mm ground leeway	A	70,–	8,–	78,–
GU 500, painted	A	891,–	274,–	1165,–
Lid, galvanized	A	98,–	18,–	116,–
Castor Set, polyamide, Load capacity 1350 kg / castor set	A	192,–	15,–	207,–
Skip Body Welded Oil and Watertight	A	78,–	0,–	78,–
Adjustable dumping brake	A	464,–	10,–	474,–
Crane lifting eyes for use with a crane	A	106,–	8,–	114,–
Support legs, 100 mm ground leeway	A	70,–	8,–	78,–
GU 500, hot-dip galvanized	A	1160,–	274,–	1434,–
Lid, galvanized	A	98,–	18,–	116,–
Castor Set, polyamide, Load capacity 1350 kg / castor set	A	192,–	15,–	207,–
Skip Body Welded Oil and Watertight	A	78,–	0,–	78,–
Adjustable dumping brake	A	464,–	10,–	474,–
Crane lifting eyes for use with a crane	A	106,–	8,–	114,–
Support legs, 100 mm ground leeway	A	70,–	8,–	78,–
GU 750, painted	A	1052,–	274,–	1326,–
Lid, galvanized	A	139,–	26,–	165,–
Castor Set, polyamide, Load capacity 1350 kg / castor set	A	192,–	15,–	207,–
Skip Body Welded Oil and Watertight	A	78,–	0,–	78,–
Adjustable dumping brake	A	464,–	10,–	474,–
Crane lifting eyes for use with a crane	A	106,–	8,–	114,–
Support legs, 100 mm ground leeway	A	70,–	8,–	78,–
GU 750, hot-dip galvanized	A	1371,–	274,–	1645,–
Lid, galvanized	A	139,–	26,–	165,–
Castor Set, polyamide, Load capacity 1350 kg / castor set	A	192,–	15,–	207,–
Skip Body Welded Oil and Watertight	A	78,–	0,–	78,–
Adjustable dumping brake	A	464,–	10,–	474,–
Crane lifting eyes for use with a crane	A	106,–	8,–	114,–
Support legs, 100 mm ground leeway	A	70,–	8,–	78,–
GU 1000, painted	A	1163,–	274,–	1437,–
Lid, galvanized	A	192,–	27,–	219,–
Castor Set, polyamide, Load capacity 1350 kg / castor set	A	192,–	15,–	207,–
Skip Body Welded Oil and Watertight	A	121,–	0,–	121,–
Adjustable dumping brake	A	464,–	10,–	474,–
Crane lifting eyes for use with a crane	A	106,–	8,–	114,–
Support legs, 100 mm ground leeway	A	70,–	8,–	78,–
GU 1000, hot-dip galvanized	A	1647,–	383,–	2030,–

Prices in EUR, valid EXW DE-46354 Südlohn, DE-38820 Halberstadt, unpacked
Freight charges valid CPT Great Britain, islands & the following post code areas excluded: IC, ZE

BAUER GmbH
Eichendorffstr. 62
46354 Südlohn, Germany

Tel. +49 2862 70 90
info@bauer-suedlohn.com
www.bauer-suedlohn.com

Geschäftsführer
Patrick Bauer, Pascal Bauer
Amtsgericht Coesfeld HRB 5259

TÜVNORD
TÜV NORD CERT GmbH
DIN EN ISO 9001
tuev-nord.de

Price List 0726 en-GB
Forklift Truck Attachments

Tilting Container Type GU	Category	Price	Freight charges	Price including freight charges
Lid, galvanized	A	192,–	27,–	219,–
Castor Set, polyamide, Load capacity 1350 kg / castor set	A	192,–	15,–	207,–
Skip Body Welded Oil and Watertight	A	121,–	0,–	121,–
Adjustable dumping brake	A	464,–	10,–	474,–
Crane lifting eyes for use with a crane	A	106,–	8,–	114,–
Support legs, 100 mm ground leeway	A	70,–	8,–	78,–
GU 1500, painted	A	1357,–	383,–	1740,–
Lid, galvanized	A	192,–	27,–	219,–
Castor Set, polyamide, Load capacity 1350 kg / castor set	A	192,–	15,–	207,–
Skip Body Welded Oil and Watertight	A	121,–	0,–	121,–
Adjustable dumping brake	A	464,–	10,–	474,–
Crane lifting eyes for use with a crane	A	106,–	8,–	114,–
Support legs, 100 mm ground leeway	A	70,–	8,–	78,–
GU 1500, hot-dip galvanized	A	1769,–	383,–	2152,–
Lid, galvanized	A	192,–	27,–	219,–
Castor Set, polyamide, Load capacity 1350 kg / castor set	A	192,–	15,–	207,–
Skip Body Welded Oil and Watertight	A	121,–	0,–	121,–
Adjustable dumping brake	A	464,–	10,–	474,–
Crane lifting eyes for use with a crane	A	106,–	8,–	114,–
Support legs, 100 mm ground leeway	A	70,–	8,–	78,–
GU 2000, painted	A	1675,–	383,–	2058,–
Lid, galvanized	A	226,–	32,–	258,–
Castor Set, polyamide, Load capacity 1350 kg / castor set	A	192,–	15,–	207,–
Skip Body Welded Oil and Watertight	A	121,–	0,–	121,–
Adjustable dumping brake	A	464,–	10,–	474,–
Crane lifting eyes for use with a crane	A	106,–	8,–	114,–
Support legs, 100 mm ground leeway	A	70,–	8,–	78,–
GU 2000, hot-dip galvanized	A	2200,–	383,–	2583,–
Lid, galvanized	A	226,–	32,–	258,–
Castor Set, polyamide, Load capacity 1350 kg / castor set	A	192,–	15,–	207,–
Skip Body Welded Oil and Watertight	A	121,–	0,–	121,–
Adjustable dumping brake	A	464,–	10,–	474,–
Crane lifting eyes for use with a crane	A	106,–	8,–	114,–
Support legs, 100 mm ground leeway	A	70,–	8,–	78,–

Swarf Tilting Container Type GU-E	Category	Price	Freight charges	Price including freight charges
GU-E 300, painted	A	775,–	274,–	1049,–
Lid, galvanized	A	98,–	18,–	116,–
Castor Set, polyamide, Load capacity 1350 kg / castor set	A	192,–	15,–	207,–
Crane lifting eyes for use with a crane	A	106,–	8,–	114,–
Support legs, 100 mm ground leeway	A	70,–	8,–	78,–
GU-E 300, hot-dip galvanized	A	986,–	274,–	1260,–
Lid, galvanized	A	98,–	18,–	116,–
Castor Set, polyamide, Load capacity 1350 kg / castor set	A	192,–	15,–	207,–
Crane lifting eyes for use with a crane	A	106,–	8,–	114,–
Support legs, 100 mm ground leeway	A	70,–	8,–	78,–

Prices in EUR, valid EXW DE-46354 Südlohn, DE-38820 Halberstadt, unpacked
Freight charges valid CPT Great Britain, islands & the following post code areas excluded: IC, ZE

BAUER GmbH
Eichendorffstr. 62
46354 Südlohn, Germany

Tel. +49 2862 70 90
info@bauer-suedlohn.com
www.bauer-suedlohn.com

Geschäftsführer
Patrick Bauer, Pascal Bauer
Amtsgericht Coesfeld HRB 5259

TÜVNORD
TÜV NORD CERT GmbH
DIN EN ISO 9001
tuev-nord.de

Price List 0726 en-GB
Forklift Truck Attachments

Swarf Tilting Container Type GU-E	Category	Price	Freight charges	Price including freight charges
GU-E 500, painted	A	1012,–	274,–	1286,–
Lid, galvanized	A	98,–	18,–	116,–
Castor Set, polyamide, Load capacity 1350 kg / castor set	A	192,–	15,–	207,–
Adjustable dumping brake	A	464,–	10,–	474,–
Crane lifting eyes for use with a crane	A	106,–	8,–	114,–
Support legs, 100 mm ground leeway	A	70,–	8,–	78,–
GU-E 500, hot-dip galvanized	A	1280,–	274,–	1554,–
Lid, galvanized	A	98,–	18,–	116,–
Castor Set, polyamide, Load capacity 1350 kg / castor set	A	192,–	15,–	207,–
Adjustable dumping brake	A	464,–	10,–	474,–
Crane lifting eyes for use with a crane	A	106,–	8,–	114,–
Support legs, 100 mm ground leeway	A	70,–	8,–	78,–
GU-E 750, painted	A	1172,–	274,–	1446,–
Lid, galvanized	A	139,–	26,–	165,–
Castor Set, polyamide, Load capacity 1350 kg / castor set	A	192,–	15,–	207,–
Adjustable dumping brake	A	464,–	10,–	474,–
Crane lifting eyes for use with a crane	A	106,–	8,–	114,–
Support legs, 100 mm ground leeway	A	70,–	8,–	78,–
GU-E 750, hot-dip galvanized	A	1491,–	274,–	1765,–
Lid, galvanized	A	139,–	26,–	165,–
Castor Set, polyamide, Load capacity 1350 kg / castor set	A	192,–	15,–	207,–
Adjustable dumping brake	A	464,–	10,–	474,–
Crane lifting eyes for use with a crane	A	106,–	8,–	114,–
Support legs, 100 mm ground leeway	A	70,–	8,–	78,–
GU-E 1000, painted	A	1325,–	274,–	1599,–
Lid, galvanized	A	192,–	27,–	219,–
Castor Set, polyamide, Load capacity 1350 kg / castor set	A	192,–	15,–	207,–
Adjustable dumping brake	A	464,–	10,–	474,–
Crane lifting eyes for use with a crane	A	106,–	8,–	114,–
Support legs, 100 mm ground leeway	A	70,–	8,–	78,–
GU-E 1000, hot-dip galvanized	A	1810,–	383,–	2193,–
Lid, galvanized	A	192,–	27,–	219,–
Castor Set, polyamide, Load capacity 1350 kg / castor set	A	192,–	15,–	207,–
Adjustable dumping brake	A	464,–	10,–	474,–
Crane lifting eyes for use with a crane	A	106,–	8,–	114,–
Support legs, 100 mm ground leeway	A	70,–	8,–	78,–
GU-E 1500, painted	A	1520,–	383,–	1903,–
Lid, galvanized	A	192,–	27,–	219,–
Castor Set, polyamide, Load capacity 1350 kg / castor set	A	192,–	15,–	207,–
Adjustable dumping brake	A	464,–	10,–	474,–
Crane lifting eyes for use with a crane	A	106,–	8,–	114,–
Support legs, 100 mm ground leeway	A	70,–	8,–	78,–
GU-E 1500, hot-dip galvanized	A	1932,–	383,–	2315,–
Lid, galvanized	A	192,–	27,–	219,–
Castor Set, polyamide, Load capacity 1350 kg / castor set	A	192,–	15,–	207,–
Adjustable dumping brake	A	464,–	10,–	474,–

Prices in EUR, valid EXW DE-46354 Südlohn, DE-38820 Halberstadt, unpacked
Freight charges valid CPT Great Britain, islands & the following post code areas excluded: IC, ZE

BAUER GmbH
Eichendorffstr. 62
46354 Südlohn, Germany

Tel. +49 2862 70 90
info@bauer-suedlohn.com
www.bauer-suedlohn.com

Geschäftsführer
Patrick Bauer, Pascal Bauer
Amtsgericht Coesfeld HRB 5259

TÜVNORD
TÜV NORD CERT GmbH
DIN EN ISO 9001
tuev-nord.de

Price List 0726 en-GB
Forklift Truck Attachments

Swarf Tilting Container Type GU-E	Category	Price	Freight charges	Price including freight charges
Crane lifting eyes for use with a crane	A	106,–	8,–	114,–
Support legs, 100 mm ground leeway	A	70,–	8,–	78,–
GU-E 2000, painted	A	1838,–	383,–	2221,–
Lid, galvanized	A	226,–	32,–	258,–
Castor Set, polyamide, Load capacity 1350 kg / castor set	A	192,–	15,–	207,–
Adjustable dumping brake	A	464,–	10,–	474,–
Crane lifting eyes for use with a crane	A	106,–	8,–	114,–
Support legs, 100 mm ground leeway	A	70,–	8,–	78,–
GU-E 2000, hot-dip galvanized	A	2362,–	383,–	2745,–
Lid, galvanized	A	226,–	32,–	258,–
Castor Set, polyamide, Load capacity 1350 kg / castor set	A	192,–	15,–	207,–
Adjustable dumping brake	A	464,–	10,–	474,–
Crane lifting eyes for use with a crane	A	106,–	8,–	114,–
Support legs, 100 mm ground leeway	A	70,–	8,–	78,–

Tilting Container Type GU-RZ	Category	Price	Freight charges	Price including freight charges
GU-RZ 30, painted	A	699,–	274,–	973,–
Lid, galvanized	A	95,–	18,–	113,–
GU-RZ 30, hot-dip galvanized	A	779,–	274,–	1053,–
Lid, galvanized	A	95,–	18,–	113,–
GU-RZ 55, painted	A	931,–	274,–	1205,–
Lid, galvanized	A	95,–	18,–	113,–
GU-RZ 55, hot-dip galvanized	A	1026,–	274,–	1300,–
Lid, galvanized	A	95,–	18,–	113,–

Fork Protection Type GZS	Category	Price	Freight charges	Price including freight charges
GZS, painted	F	179,–	74,–	253,–

Container With Drop Away Base Type HKB	Category	Price	Freight charges	Price including freight charges
HKB 60, painted	A	1078,–	274,–	1352,–
HKB 70, painted	A	1140,–	274,–	1414,–
HKB 90, painted	A	1417,–	274,–	1691,–

Shovel Type HVR	Category	Price	Freight charges	Price including freight charges
HVR 50, painted	A	3393,–	383,–	3776,–
HVR 75, painted	A	3976,–	459,–	4435,–
HVR 80 L, painted	A	4095,–	459,–	4554,–
HVR 100, painted	A	5033,–	624,–	5657,–
HVR 150, painted	A	6432,–	624,–	7056,–

Kippomat Type KG-A	Category	Price	Freight charges	Price including freight charges
KG-A, hot-dip galvanized	A	3218,–	383,–	3601,–

Kippomat Type KG-B	Category	Price	Freight charges	Price including freight charges
KG-B, hot-dip galvanized	A	3137,–	383,–	3520,–

Prices in EUR, valid EXW DE-46354 Südlohn, DE-38820 Halberstadt, unpacked
Freight charges valid CPT Great Britain, islands & the following post code areas excluded: IC, ZE

BAUER GmbH
Eichendorffstr. 62
46354 Südlohn, Germany

Tel. +49 2862 70 90
info@bauer-suedlohn.com
www.bauer-suedlohn.com

Geschäftsführer
Patrick Bauer, Pascal Bauer
Amtsgericht Coesfeld HRB 5259

TÜVNORD
TÜV NORD CERT GmbH
DIN EN ISO 9001
tuev-nord.de

Price List 0726 en-GB
Forklift Truck Attachments

Kippomat Type KG-C	Category	Price	Freight charges	Price including freight charges
KG-C, hot-dip galvanized	A	2081,–	274,–	2355,–

Tipping Skip Type KK	Category	Price	Freight charges	Price including freight charges
KK 250, painted	E	484,–	192,–	676,–
Lid, galvanized	E	136,–	15,–	151,–
Castor Set, polyamide, Load capacity 1050 kg / castor set	A	136,–	15,–	151,–
Castor Set, solid rubber, Load capacity 615 kg / castor set	E	103,–	15,–	118,–
KK 250, hot-dip galvanized	E	534,–	192,–	726,–
Lid, galvanized	E	136,–	15,–	151,–
Castor Set, polyamide, Load capacity 1050 kg / castor set	A	136,–	15,–	151,–
Castor Set, solid rubber, Load capacity 615 kg / castor set	E	103,–	15,–	118,–
KK 400, painted	E	551,–	192,–	743,–
Lid, galvanized	E	156,–	16,–	172,–
Castor Set, polyamide, Load capacity 1050 kg / castor set	A	136,–	15,–	151,–
Castor Set, solid rubber, Load capacity 615 kg / castor set	E	103,–	15,–	118,–
KK 400, hot-dip galvanized	E	600,–	192,–	792,–
Lid, galvanized	E	156,–	16,–	172,–
Castor Set, polyamide, Load capacity 1050 kg / castor set	A	136,–	15,–	151,–
Castor Set, solid rubber, Load capacity 615 kg / castor set	E	103,–	15,–	118,–
KK 600, painted	E	764,–	274,–	1038,–
Lid, galvanized	E	173,–	20,–	193,–
Castor Set, polyamide, Load capacity 1050 kg / castor set	A	136,–	15,–	151,–
Castor Set, solid rubber, Load capacity 615 kg / castor set	E	103,–	15,–	118,–
KK 600, hot-dip galvanized	E	865,–	274,–	1139,–
Castor Set, solid rubber, Load capacity 615 kg / castor set	E	103,–	15,–	118,–
Lid, galvanized	E	173,–	20,–	193,–
Castor Set, polyamide, Load capacity 1050 kg / castor set	A	136,–	15,–	151,–
KK 800, painted	E	823,–	274,–	1097,–
Lid, galvanized	E	181,–	21,–	202,–
Castor Set, polyamide, Load capacity 1050 kg / castor set	A	136,–	15,–	151,–
Castor Set, solid rubber, Load capacity 615 kg / castor set	E	103,–	15,–	118,–
KK 800, hot-dip galvanized	E	930,–	274,–	1204,–
Lid, galvanized	E	181,–	21,–	202,–
Castor Set, polyamide, Load capacity 1050 kg / castor set	A	136,–	15,–	151,–
Castor Set, solid rubber, Load capacity 615 kg / castor set	E	103,–	15,–	118,–
KK 1000, painted	E	881,–	274,–	1155,–
Lid, galvanized	E	193,–	22,–	215,–
Castor Set, polyamide, Load capacity 1050 kg / castor set	A	136,–	15,–	151,–
Castor Set, solid rubber, Load capacity 615 kg / castor set	E	103,–	15,–	118,–
KK 1000, hot-dip galvanized	E	1014,–	274,–	1288,–
Lid, galvanized	E	193,–	22,–	215,–
Castor Set, polyamide, Load capacity 1050 kg / castor set	A	136,–	15,–	151,–
Castor Set, solid rubber, Load capacity 615 kg / castor set	E	103,–	15,–	118,–

Prices in EUR, valid EXW DE-46354 Südlohn, DE-38820 Halberstadt, unpacked
Freight charges valid CPT Great Britain, islands & the following post code areas excluded: IC, ZE

BAUER GmbH
Eichendorffstr. 62
46354 Südlohn, Germany

Tel. +49 2862 70 90
info@bauer-suedlohn.com
www.bauer-suedlohn.com

Geschäftsführer
Patrick Bauer, Pascal Bauer
Amtsgericht Coesfeld HRB 5259

TÜVNORD
TÜV NORD CERT GmbH
DIN EN ISO 9001
tuev-nord.de

Price List 0726 en-GB
Forklift Truck Attachments

Kippomat Type KM	Category	Price	Freight charges	Price including freight charges
KM, hot-dip galvanized	A	3218,–	274,–	3492,–

Tipping Skip Type KN	Category	Price	Freight charges	Price including freight charges
KN 250, painted	E	484,–	192,–	676,–
Lid, galvanized	E	136,–	15,–	151,–
Castor Set, polyamide, Load capacity 1050 kg / castor set	A	136,–	15,–	151,–
Castor Set, solid rubber, Load capacity 615 kg / castor set	E	103,–	15,–	118,–
KN 250, hot-dip galvanized	E	534,–	192,–	726,–
Lid, galvanized	E	136,–	15,–	151,–
Castor Set, polyamide, Load capacity 1050 kg / castor set	A	136,–	15,–	151,–
Castor Set, solid rubber, Load capacity 615 kg / castor set	E	103,–	15,–	118,–
KN 400, painted	E	551,–	192,–	743,–
Lid, galvanized	E	156,–	16,–	172,–
Castor Set, polyamide, Load capacity 1050 kg / castor set	A	136,–	15,–	151,–
Castor Set, solid rubber, Load capacity 615 kg / castor set	E	103,–	15,–	118,–
KN 400, hot-dip galvanized	E	600,–	192,–	792,–
Lid, galvanized	E	156,–	16,–	172,–
Castor Set, polyamide, Load capacity 1050 kg / castor set	A	136,–	15,–	151,–
Castor Set, solid rubber, Load capacity 615 kg / castor set	E	103,–	15,–	118,–

Tipping Skip Type KS	Category	Price	Freight charges	Price including freight charges
KS 400, painted	E	900,–	274,–	1174,–
KS 550, painted	E	964,–	274,–	1238,–
KS 700, painted	E	1024,–	274,–	1298,–

Extensible Crane Arm Type KT	Category	Price	Freight charges	Price including freight charges
KT 2,5, painted	A	1448,–	274,–	1722,–
KT 2,5, hot-dip galvanized	A	1763,–	383,–	2146,–
KT 5,0, painted	A	1798,–	383,–	2181,–
KT 5,0, hot-dip galvanized	A	2242,–	383,–	2625,–

Extensible Crane Arm Type KTH	Category	Price	Freight charges	Price including freight charges
KTH 2,5, painted	A	1748,–	383,–	2131,–
KTH 2,5, hot-dip galvanized	A	2068,–	383,–	2451,–
KTH 5,0, painted	A	2012,–	383,–	2395,–
KTH 5,0, hot-dip galvanized	A	2373,–	383,–	2756,–

Extensible Crane Arm Type KTH-K	Category	Price	Freight charges	Price including freight charges
KTH-K 2,5, painted	A	1606,–	274,–	1880,–
KTH-K 2,5, hot-dip galvanized	A	1943,–	274,–	2217,–
KTH-K 5,0, painted	A	1852,–	274,–	2126,–
KTH-K 5,0, hot-dip galvanized	A	2232,–	383,–	2615,–

Extensible Crane Arm Type KT-K	Category	Price	Freight charges	Price including freight charges
KT-K 2,5, painted	A	1291,–	274,–	1565,–

Prices in EUR, valid EXW DE-46354 Südlohn, DE-38820 Halberstadt, unpacked
Freight charges valid CPT Great Britain, islands & the following post code areas excluded: IC, ZE

BAUER GmbH
Eichendorffstr. 62
46354 Südlohn, Germany

Tel. +49 2862 70 90
info@bauer-suedlohn.com
www.bauer-suedlohn.com

Geschäftsführer
Patrick Bauer, Pascal Bauer
Amtsgericht Coesfeld HRB 5259

TÜVNORD
TÜV NORD CERT GmbH
DIN EN ISO 9001
tuev-nord.de

Price List 0726 en-GB
Forklift Truck Attachments

Extensible Crane Arm Type KT-K	Category	Price	Freight charges	Price including freight charges
KT-K 2,5, hot-dip galvanized	A	1622,–	274,–	1896,–
KT-K 5,0, painted	A	1625,–	274,–	1899,–
KT-K 5,0, hot-dip galvanized	A	2092,–	274,–	2366,–

Barrow Tipper Type KW-ET	Category	Price	Freight charges	Price including freight charges
KW-ET 250, painted	E	588,–	192,–	780,–
Lid, galvanized	E	136,–	15,–	151,–
KW-ET 250, hot-dip galvanized	E	900,–	192,–	1092,–
Lid, galvanized	E	136,–	15,–	151,–
KW-ET 400, painted	E	648,–	192,–	840,–
Lid, galvanized	E	156,–	16,–	172,–
KW-ET 400, hot-dip galvanized	E	998,–	192,–	1190,–
Lid, galvanized	E	156,–	16,–	172,–
KW-ET 600, painted	E	808,–	274,–	1082,–
Lid, galvanized	E	173,–	20,–	193,–
KW-ET 600, hot-dip galvanized	E	1166,–	274,–	1440,–
Lid, galvanized	E	173,–	20,–	193,–
KW-ET 1000, painted	E	997,–	274,–	1271,–
Lid, galvanized	E	193,–	22,–	215,–
KW-ET 1000, hot-dip galvanized	E	1591,–	274,–	1865,–
Lid, galvanized	E	193,–	22,–	215,–

Loading Arm Type LA	Category	Price	Freight charges	Price including freight charges
LA 1600-1,0, painted	A	542,–	192,–	734,–
LA 1600-1,0, hot-dip galvanized	A	581,–	192,–	773,–
LA 1600-2,5, painted	A	786,–	192,–	978,–
LA 1600-2,5, hot-dip galvanized	A	927,–	192,–	1119,–
LA 1600-5,0, painted	A	1133,–	274,–	1407,–
LA 1600-5,0, hot-dip galvanized	A	1325,–	274,–	1599,–
LA 2400-1,0, painted	A	569,–	192,–	761,–
LA 2400-1,0, hot-dip galvanized	A	632,–	192,–	824,–
LA 2400-2,5, painted	A	877,–	274,–	1151,–
LA 2400-2,5, hot-dip galvanized	A	1017,–	274,–	1291,–
LA 2400-5,0, painted	A	1250,–	274,–	1524,–
LA 2400-5,0, hot-dip galvanized	A	1480,–	274,–	1754,–
LA 25-1,0, painted	A	632,–	192,–	824,–
LA 25-1,0, hot-dip galvanized	A	683,–	192,–	875,–

Loading Arm Type LAT	Category	Price	Freight charges	Price including freight charges
LAT 25-1,0, painted	A	766,–	192,–	958,–
LAT 25-1,0, hot-dip galvanized	A	838,–	192,–	1030,–

Scissor Gripper Type LG	Category	Price	Freight charges	Price including freight charges
LG 60, painted	B	245,–	74,–	319,–
LG 60, galvanized	B	223,–	74,–	297,–

Prices in EUR, valid EXW DE-46354 Südlohn, DE-38820 Halberstadt, unpacked
Freight charges valid CPT Great Britain, islands & the following post code areas excluded: IC, ZE

BAUER GmbH
Eichendorffstr. 62
46354 Südlohn, Germany

Tel. +49 2862 70 90
info@bauer-suedlohn.com
www.bauer-suedlohn.com

Geschäftsführer
Patrick Bauer, Pascal Bauer
Amtsgericht Coesfeld HRB 5259

TÜVNORD
TÜV NORD CERT GmbH
DIN EN ISO 9001
tuev-nord.de

Price List 0726 en-GB
Forklift Truck Attachments

Scissor Gripper Type LG	Category	Price	Freight charges	Price including freight charges
LG 200, painted	B	245,–	74,–	319,–
LG 200, galvanized	B	223,–	74,–	297,–

Container for Long Material Type LGK	Category	Price	Freight charges	Price including freight charges
LGK, painted	A	1376,–	274,–	1650,–
Castor Set, polyamide, Load capacity 1350 kg / castor set	A	192,–	15,–	207,–
LGK, hot-dip galvanized	A	1676,–	274,–	1950,–
Castor Set, polyamide, Load capacity 1350 kg / castor set	A	192,–	15,–	207,–

Long Material Carrier Type LGT	Category	Price	Freight charges	Price including freight charges
LGT 1,5, painted	A	1929,–	383,–	2312,–
LGT 1,5, hot-dip galvanized	A	2263,–	383,–	2646,–
LGT 2,5, painted	A	2164,–	on request	on request
LGT 2,5, hot-dip galvanized	A	2590,–	on request	on request
LGT 3,5, painted	A	2989,–	on request	on request
LGT 3,5, hot-dip galvanized	A	3670,–	on request	on request
LGT 4,5, painted	A	3302,–	on request	on request
LGT 4,5, hot-dip galvanized	A	4071,–	on request	on request

Drum Claw Type LGZ	Category	Price	Freight charges	Price including freight charges
LGZ 60, painted	B	225,–	74,–	299,–
LGZ 60, galvanized	B	211,–	74,–	285,–
LGZ 200, painted	B	225,–	74,–	299,–
LGZ 200, galvanized	B	211,–	74,–	285,–

Crane Hook Type LH	Category	Price	Freight charges	Price including freight charges
LH-I 1,0, painted	A	199,–	74,–	273,–
LH-I 1,0, hot-dip galvanized	A	223,–	74,–	297,–
LH-I 1,5, painted	A	218,–	74,–	292,–
LH-I 1,5, hot-dip galvanized	A	242,–	74,–	316,–
LH-I 2,0, painted	A	229,–	74,–	303,–
LH-I 2,0, hot-dip galvanized	A	254,–	74,–	328,–
LH-I 2,5, painted	A	255,–	74,–	329,–
LH-I 2,5, hot-dip galvanized	A	279,–	74,–	353,–
LH-I 3,0, painted	A	331,–	74,–	405,–
LH-I 3,0, hot-dip galvanized	A	356,–	74,–	430,–
LH-II 1,5, painted	A	329,–	74,–	403,–
LH-II 1,5, hot-dip galvanized	A	378,–	74,–	452,–
LH-II 2,5, painted	A	434,–	74,–	508,–
LH-II 2,5, hot-dip galvanized	A	516,–	74,–	590,–
LH-II 5,0, painted	A	720,–	192,–	912,–
LH-II 5,0, hot-dip galvanized	A	808,–	192,–	1000,–
LH-II 7,5, painted	A	856,–	192,–	1048,–
LH-II 7,5, hot-dip galvanized	A	949,–	192,–	1141,–

Prices in EUR, valid EXW DE-46354 Südlohn, DE-38820 Halberstadt, unpacked
Freight charges valid CPT Great Britain, islands & the following post code areas excluded: IC, ZE

BAUER GmbH
Eichendorffstr. 62
46354 Südlohn, Germany

Tel. +49 2862 70 90
info@bauer-suedlohn.com
www.bauer-suedlohn.com

Geschäftsführer
Patrick Bauer, Pascal Bauer
Amtsgericht Coesfeld HRB 5259

TÜVNORD
TÜV NORD CERT GmbH
DIN EN ISO 9001
tuev-nord.de

Price List 0726 en-GB
Forklift Truck Attachments

Long Load Handler Type LSL	Category	Price	Freight charges	Price including freight charges
LSL, painted	A	1141,–	274,–	1415,–
LSL, hot-dip galvanized	A	1310,–	274,–	1584,–

Long Material Sidecar Type LSW	Category	Price	Freight charges	Price including freight charges
LSW 1,3, painted	A	953,–	192,–	1145,–
LSW 1,3, hot-dip galvanized	A	1017,–	274,–	1291,–
LSW 2,5, painted	A	1132,–	192,–	1324,–
LSW 2,5, hot-dip galvanized	A	1197,–	274,–	1471,–

Access Safety Platform Type MB-B	Category	Price	Freight charges	Price including freight charges
MB-B, painted	A	1085,–	274,–	1359,–
Castor Set, polyamide, Load capacity 1050 kg / castor set	A	136,–	15,–	151,–

Access Safety Platform Type MB-B/L	Category	Price	Freight charges	Price including freight charges
MB-B/L, painted	A	1274,–	274,–	1548,–
Castor Set, polyamide, Load capacity 1050 kg / castor set	A	136,–	15,–	151,–

Access Safety Platform Type MB-D	Category	Price	Freight charges	Price including freight charges
MB-D, painted	A	908,–	274,–	1182,–
Castor Set, polyamide, Load capacity 1050 kg / castor set	A	136,–	15,–	151,–

Access Safety Platform Type MB-D/L	Category	Price	Freight charges	Price including freight charges
MB-D/L, painted	A	1096,–	274,–	1370,–
Castor Set, polyamide, Load capacity 1050 kg / castor set	A	136,–	15,–	151,–

Access Safety Platform Type MB-F	Category	Price	Freight charges	Price including freight charges
MB-F, painted	A	1074,–	274,–	1348,–
Castor Set, polyamide, Load capacity 1050 kg / castor set	A	136,–	15,–	151,–

Access Safety Platform Type MB-II	Category	Price	Freight charges	Price including freight charges
MB-II, painted	A	994,–	274,–	1268,–
Castor Set, polyamide, Load capacity 1050 kg / castor set	A	136,–	15,–	151,–
MB-II, hot-dip galvanized	A	1171,–	274,–	1445,–
Castor Set, polyamide, Load capacity 1050 kg / castor set	A	136,–	15,–	151,–

Access Safety Platform Type MB-K-IV	Category	Price	Freight charges	Price including freight charges
MB-K-IV, painted	A	2012,–	327,–	2339,–

Access Safety Platform Type MB-ST	Category	Price	Freight charges	Price including freight charges
MB-ST, painted	A	2576,–	274,–	2850,–
Castor Set, polyamide, Load capacity 1050 kg / castor set	A	136,–	15,–	151,–

Access Safety Platform Type MB-ST/L	Category	Price	Freight charges	Price including freight charges
MB-ST/L, painted	A	2764,–	274,–	3038,–

Prices in EUR, valid EXW DE-46354 Südlohn, DE-38820 Halberstadt, unpacked
Freight charges valid CPT Great Britain, islands & the following post code areas excluded: IC, ZE

BAUER GmbH
Eichendorffstr. 62
46354 Südlohn, Germany

Tel. +49 2862 70 90
info@bauer-suedlohn.com
www.bauer-suedlohn.com

Geschäftsführer
Patrick Bauer, Pascal Bauer
Amtsgericht Coesfeld HRB 5259

TÜVNORD
TÜV NORD CERT GmbH
DIN EN ISO 9001
tuev-nord.de

Price List 0726 en-GB
Forklift Truck Attachments

Access Safety Platform Type MB-ST/L	Category	Price	Freight charges	Price including freight charges
Castor Set, polyamide, Load capacity 1050 kg / castor set	A	136,–	15,–	151,–

Access Safety Platform Type MB-ST/T	Category	Price	Freight charges	Price including freight charges
MB-ST/T, painted	A	2903,–	274,–	3177,–
Castor Set, polyamide, Load capacity 1050 kg / castor set	A	136,–	15,–	151,–

Access Safety Platform Type MB-ST/T/L	Category	Price	Freight charges	Price including freight charges
MB-ST/T/L, painted	A	3092,–	274,–	3366,–
Castor Set, polyamide, Load capacity 1050 kg / castor set	A	136,–	15,–	151,–

Mini Tilting Container Type MGU	Category	Price	Freight charges	Price including freight charges
MGU 230, painted	A	569,–	192,–	761,–
Lid, galvanized	A	131,–	18,–	149,–
Castor Set, polyamide, Load capacity 1050 kg / castor set	A	156,–	15,–	171,–
Skip Body Welded Oil and Watertight	A	78,–	0,–	78,–
MGU 230, hot-dip galvanized	A	655,–	274,–	929,–
Lid, galvanized	A	131,–	18,–	149,–
Castor Set, polyamide, Load capacity 1050 kg / castor set	A	156,–	15,–	171,–
Skip Body Welded Oil and Watertight	A	78,–	0,–	78,–
MGU 270, painted	A	621,–	274,–	895,–
Lid, galvanized	A	131,–	18,–	149,–
Castor Set, polyamide, Load capacity 1050 kg / castor set	A	156,–	15,–	171,–
Skip Body Welded Oil and Watertight	A	78,–	0,–	78,–
MGU 270, hot-dip galvanized	A	729,–	274,–	1003,–
Lid, galvanized	A	131,–	18,–	149,–
Castor Set, polyamide, Load capacity 1050 kg / castor set	A	156,–	15,–	171,–
Skip Body Welded Oil and Watertight	A	78,–	0,–	78,–
MGU 460, painted	A	815,–	274,–	1089,–
Lid, galvanized	A	169,–	22,–	191,–
Castor Set, polyamide, Load capacity 1050 kg / castor set	A	156,–	15,–	171,–
Skip Body Welded Oil and Watertight	A	78,–	0,–	78,–
MGU 460, hot-dip galvanized	A	967,–	274,–	1241,–
Lid, galvanized	A	169,–	22,–	191,–
Castor Set, polyamide, Load capacity 1050 kg / castor set	A	156,–	15,–	171,–
Skip Body Welded Oil and Watertight	A	78,–	0,–	78,–
MGU 610, painted	A	919,–	274,–	1193,–
Lid, galvanized	A	181,–	26,–	207,–
Castor Set, polyamide, Load capacity 1050 kg / castor set	A	156,–	15,–	171,–
Skip Body Welded Oil and Watertight	A	78,–	0,–	78,–
MGU 610, hot-dip galvanized	A	1089,–	274,–	1363,–
Lid, galvanized	A	181,–	26,–	207,–
Castor Set, polyamide, Load capacity 1050 kg / castor set	A	156,–	15,–	171,–
Skip Body Welded Oil and Watertight	A	78,–	0,–	78,–

Prices in EUR, valid EXW DE-46354 Südlohn, DE-38820 Halberstadt, unpacked
Freight charges valid CPT Great Britain, islands & the following post code areas excluded: IC, ZE

BAUER GmbH
Eichendorffstr. 62
46354 Südlohn, Germany

Tel. +49 2862 70 90
info@bauer-suedlohn.com
www.bauer-suedlohn.com

Geschäftsführer
Patrick Bauer, Pascal Bauer
Amtsgericht Coesfeld HRB 5259

TÜVNORD
TÜV NORD CERT GmbH
DIN EN ISO 9001
tuev-nord.de

Price List 0726 en-GB
Forklift Truck Attachments

Wheelie Bin Jack Type MH	Category	Price	Freight charges	Price including freight charges
MH-I, painted	A	657,–	192,–	849,–
MH-II, painted	A	725,–	192,–	917,–
MH-III, painted	A	784,–	192,–	976,–

Wheelie Bin Tipper Type MK	Category	Price	Freight charges	Price including freight charges
MK 120, painted	A	1273,–	192,–	1465,–
MK 240, painted	A	1273,–	192,–	1465,–

Wheelie Bin Tipper Type MK-H	Category	Price	Freight charges	Price including freight charges
MK-H 120, painted	A	1902,–	192,–	2094,–
MK-H 240, painted	A	1902,–	274,–	2176,–

Mini Container With Drop Away Base Type MSB	Category	Price	Freight charges	Price including freight charges
MSB 150, painted	A	636,–	192,–	828,–
Castor Set, polyamide, Load capacity 1050 kg / castor set	A	156,–	15,–	171,–
Guiding Plates, galvanized	A	73,–	12,–	85,–
MSB 150, hot-dip galvanized	A	746,–	192,–	938,–
Castor Set, polyamide, Load capacity 1050 kg / castor set	A	156,–	15,–	171,–
Guiding Plates, galvanized	A	73,–	12,–	85,–
MSB 250, painted	A	690,–	192,–	882,–
Castor Set, polyamide, Load capacity 1050 kg / castor set	A	156,–	15,–	171,–
Guiding Plates, galvanized	A	73,–	12,–	85,–
MSB 250, hot-dip galvanized	A	826,–	192,–	1018,–
Castor Set, polyamide, Load capacity 1050 kg / castor set	A	156,–	15,–	171,–
Guiding Plates, galvanized	A	73,–	12,–	85,–
MSB 400, painted	A	850,–	192,–	1042,–
Castor Set, polyamide, Load capacity 1050 kg / castor set	A	156,–	15,–	171,–
Guiding Plates, galvanized	A	73,–	12,–	85,–
MSB 400, hot-dip galvanized	A	1018,–	274,–	1292,–
Castor Set, polyamide, Load capacity 1050 kg / castor set	A	156,–	15,–	171,–
Guiding Plates, galvanized	A	73,–	12,–	85,–

Tilting Container Type NK	Category	Price	Freight charges	Price including freight charges
NK 30, painted	A	700,–	274,–	974,–
Lid, galvanized	A	98,–	15,–	113,–
Castor Set, polyamide, Load capacity 1350 kg / castor set	A	192,–	15,–	207,–
Skip Body Welded Oil and Watertight	A	78,–	0,–	78,–
NK 30, hot-dip galvanized	A	984,–	274,–	1258,–
Lid, galvanized	A	98,–	15,–	113,–
Castor Set, polyamide, Load capacity 1350 kg / castor set	A	192,–	15,–	207,–
Skip Body Welded Oil and Watertight	A	78,–	0,–	78,–
NK 50, painted	A	984,–	274,–	1258,–
Lid, galvanized	A	98,–	18,–	116,–
Castor Set, polyamide, Load capacity 1350 kg / castor set	A	192,–	15,–	207,–
Skip Body Welded Oil and Watertight	A	78,–	0,–	78,–

Prices in EUR, valid EXW DE-46354 Südlohn, DE-38820 Halberstadt, unpacked
Freight charges valid CPT Great Britain, islands & the following post code areas excluded: IC, ZE

BAUER GmbH
Eichendorffstr. 62
46354 Südlohn, Germany

Tel. +49 2862 70 90
info@bauer-suedlohn.com
www.bauer-suedlohn.com

Geschäftsführer
Patrick Bauer, Pascal Bauer
Amtsgericht Coesfeld HRB 5259

TÜVNORD
TÜV NORD CERT GmbH
DIN EN ISO 9001
tuev-nord.de

Price List 0726 en-GB
Forklift Truck Attachments

Tilting Container Type NK	Category	Price	Freight charges	Price including freight charges
NK 50, hot-dip galvanized	A	1327,–	274,–	1601,–
Lid, galvanized	A	98,–	18,–	116,–
Castor Set, polyamide, Load capacity 1350 kg / castor set	A	192,–	15,–	207,–
Skip Body Welded Oil and Watertight	A	78,–	0,–	78,–
NK 75, painted	A	1115,–	383,–	1498,–
Lid, galvanized	A	142,–	22,–	164,–
Castor Set, polyamide, Load capacity 1350 kg / castor set	A	192,–	15,–	207,–
Skip Body Welded Oil and Watertight	A	78,–	0,–	78,–
NK 75, hot-dip galvanized	A	1743,–	383,–	2126,–
Lid, galvanized	A	142,–	22,–	164,–
Castor Set, polyamide, Load capacity 1350 kg / castor set	A	192,–	15,–	207,–
Skip Body Welded Oil and Watertight	A	78,–	0,–	78,–
NK 100, painted	A	1508,–	383,–	1891,–
Lid, galvanized	A	173,–	27,–	200,–
Castor Set, polyamide, Load capacity 1350 kg / castor set	A	192,–	15,–	207,–
Skip Body Welded Oil and Watertight	A	121,–	0,–	121,–
NK 100, hot-dip galvanized	A	2070,–	383,–	2453,–
Lid, galvanized	A	173,–	27,–	200,–
Castor Set, polyamide, Load capacity 1350 kg / castor set	A	192,–	15,–	207,–
Skip Body Welded Oil and Watertight	A	121,–	0,–	121,–

Cylindrical Container Type RB	Category	Price	Freight charges	Price including freight charges
RB 300, painted	A	679,–	192,–	871,–
Lid, aluminium	A	160,–	14,–	174,–
Castor Set, polyamide, Load capacity 1050 kg / castor set	A	156,–	15,–	171,–
RB 450, painted	A	793,–	192,–	985,–
Lid, aluminium	A	160,–	14,–	174,–
Castor Set, polyamide, Load capacity 1050 kg / castor set	A	156,–	15,–	171,–

Tilting Container Type RD	Category	Price	Freight charges	Price including freight charges
RD 750, painted	A	1202,–	383,–	1585,–
Castor Set, polyamide, Load capacity 1350 kg / castor set	A	192,–	15,–	207,–
Skip Body Welded Oil and Watertight	A	78,–	0,–	78,–
RD 750, hot-dip galvanized	A	1602,–	383,–	1985,–
Castor Set, polyamide, Load capacity 1350 kg / castor set	A	192,–	15,–	207,–
Skip Body Welded Oil and Watertight	A	78,–	0,–	78,–
RD 1000, painted	A	1449,–	383,–	1832,–
Castor Set, polyamide, Load capacity 1350 kg / castor set	A	192,–	15,–	207,–
Skip Body Welded Oil and Watertight	A	121,–	0,–	121,–
RD 1000, hot-dip galvanized	A	1933,–	383,–	2316,–
Castor Set, polyamide, Load capacity 1350 kg / castor set	A	192,–	15,–	207,–
Skip Body Welded Oil and Watertight	A	121,–	0,–	121,–

Platform for Off-Cuts Type RGP	Category	Price	Freight charges	Price including freight charges
RGP-1, painted	A	2437,–	on request	on request

Prices in EUR, valid EXW DE-46354 Südlohn, DE-38820 Halberstadt, unpacked
Freight charges valid CPT Great Britain, islands & the following post code areas excluded: IC, ZE

BAUER GmbH
Eichendorffstr. 62
46354 Südlohn, Germany

Tel. +49 2862 70 90
info@bauer-suedlohn.com
www.bauer-suedlohn.com

Geschäftsführer
Patrick Bauer, Pascal Bauer
Amtsgericht Coesfeld HRB 5259

TÜVNORD
TÜV NORD CERT GmbH
DIN EN ISO 9001
tuev-nord.de

Price List 0726 en-GB
Forklift Truck Attachments

Platform for Off-Cuts Type RGP	Category	Price	Freight charges	Price including freight charges
RGP-1, hot-dip galvanized	A	3118,–	on request	on request
RGP-2, painted	A	2669,–	on request	on request
RGP-2, hot-dip galvanized	A	3558,–	on request	on request
RGP-3, painted	A	2907,–	on request	on request
RGP-3, hot-dip galvanized	A	3916,–	on request	on request

Shunting Aid Type RH	Category	Price	Freight charges	Price including freight charges
RH, painted	A	426,–	74,–	500,–

Shunting Aid Type RH-AC	Category	Price	Freight charges	Price including freight charges
RH-AC, painted	A	2305,–	383,–	2688,–

Shunting Aid Type RH-RA	Category	Price	Freight charges	Price including freight charges
RH-RA, painted	A	1586,–	192,–	1778,–

Shunting Aid Type RH-RAK	Category	Price	Freight charges	Price including freight charges
RH-RAK, painted	A	1691,–	192,–	1883,–

Shunting Aid Type RH-RM	Category	Price	Freight charges	Price including freight charges
RH-RM, painted	A	1178,–	192,–	1370,–

Shunting Aid Type RH-RMK	Category	Price	Freight charges	Price including freight charges
RH-RMK, painted	A	1285,–	192,–	1477,–

Drum Lifter Type RS 60	Category	Price	Freight charges	Price including freight charges
RS 60-I, painted	B	1013,–	192,–	1205,–
RS 60-I, hot-dip galvanized	B	1076,–	192,–	1268,–
RS 60-II, painted	B	1713,–	192,–	1905,–
RS 60-II, hot-dip galvanized	B	1798,–	192,–	1990,–

Drum Lifter Type RS	Category	Price	Freight charges	Price including freight charges
RS-I/91, painted	B	1701,–	274,–	1975,–
RS-I/91, hot-dip galvanized	B	1945,–	274,–	2219,–
RS-II/91, painted	B	2948,–	274,–	3222,–
RS-II/91, hot-dip galvanized	B	3320,–	274,–	3594,–
RS-I/M, painted	B	1556,–	192,–	1748,–
RS-I/M, hot-dip galvanized	B	1798,–	274,–	2072,–
RS-II/M, painted	B	2663,–	274,–	2937,–
RS-II/M, hot-dip galvanized	B	3030,–	274,–	3304,–

Drum Lifter Type RS/D 91	Category	Price	Freight charges	Price including freight charges
RS-I/D 91, painted	B	1488,–	274,–	1762,–
RS-I/D 91, hot-dip galvanized	B	1730,–	274,–	2004,–
RS-II/D 91, painted	B	2521,–	274,–	2795,–

Prices in EUR, valid EXW DE-46354 Südlohn, DE-38820 Halberstadt, unpacked
Freight charges valid CPT Great Britain, islands & the following post code areas excluded: IC, ZE

BAUER GmbH
Eichendorffstr. 62
46354 Südlohn, Germany

Tel. +49 2862 70 90
info@bauer-suedlohn.com
www.bauer-suedlohn.com

Geschäftsführer
Patrick Bauer, Pascal Bauer
Amtsgericht Coesfeld HRB 5259

TÜVNORD
TÜV NORD CERT GmbH
DIN EN ISO 9001
tuev-nord.de

Price List 0726 en-GB
Forklift Truck Attachments

Drum Lifter Type RS/D 91	Category	Price	Freight charges	Price including freight charges
RS-II/D 91, hot-dip galvanized	B	2887,–	274,–	3161,–

Swarf Tilting Container Type S3S	Category	Price	Freight charges	Price including freight charges
S3S 300, painted	A	1357,–	274,–	1631,–
Lid, galvanized	A	174,–	18,–	192,–
Castor Set, polyamide, Load capacity 1050 kg / castor set	A	136,–	15,–	151,–
S3S 300, hot-dip galvanized	A	1454,–	383,–	1837,–
Lid, galvanized	A	174,–	18,–	192,–
Castor Set, polyamide, Load capacity 1050 kg / castor set	A	136,–	15,–	151,–
S3S 600, painted	A	1413,–	383,–	1796,–
Lid, galvanized	A	196,–	22,–	218,–
Castor Set, polyamide, Load capacity 1050 kg / castor set	A	136,–	15,–	151,–
S3S 600, hot-dip galvanized	A	1514,–	383,–	1897,–
Lid, galvanized	A	196,–	22,–	218,–
Castor Set, polyamide, Load capacity 1050 kg / castor set	A	136,–	15,–	151,–

Swarf Tilting Container Type S4A	Category	Price	Freight charges	Price including freight charges
S4A 600, painted	A	1271,–	274,–	1545,–
Lid, galvanized	A	196,–	22,–	218,–
S4A 600, hot-dip galvanized	A	1418,–	274,–	1692,–
Lid, galvanized	A	196,–	22,–	218,–
S4A 900, painted	A	1408,–	383,–	1791,–
Lid, galvanized	A	223,–	27,–	250,–
S4A 900, hot-dip galvanized	A	1595,–	383,–	1978,–
Lid, galvanized	A	223,–	27,–	250,–
S4A 1200, painted	A	1497,–	383,–	1880,–
Lid, galvanized	A	223,–	26,–	249,–
S4A 1200, hot-dip galvanized	A	1730,–	383,–	2113,–
Lid, galvanized	A	223,–	26,–	249,–

Container With Drop Away Base Type SB	Category	Price	Freight charges	Price including freight charges
SB 500, painted	B	1000,–	274,–	1274,–
Lid, galvanized	B	143,–	16,–	159,–
Castor Set, polyamide, Load capacity 1350 kg / castor set	A	192,–	15,–	207,–
Heavy-duty Castor Set, polyamide, Load capacity 2550 kg / castor set	A	379,–	15,–	394,–
SB 500, hot-dip galvanized	B	1303,–	274,–	1577,–
Lid, galvanized	B	143,–	16,–	159,–
Castor Set, polyamide, Load capacity 1350 kg / castor set	A	192,–	15,–	207,–
Heavy-duty Castor Set, polyamide, Load capacity 2550 kg / castor set	A	379,–	15,–	394,–
SB 750, painted	B	1094,–	274,–	1368,–
Lid, galvanized	B	143,–	16,–	159,–
Castor Set, polyamide, Load capacity 1350 kg / castor set	A	192,–	15,–	207,–
Heavy-duty Castor Set, polyamide, Load capacity 2550 kg / castor set	A	379,–	15,–	394,–
SB 750, hot-dip galvanized	B	1520,–	383,–	1903,–
Lid, galvanized	B	143,–	16,–	159,–

Prices in EUR, valid EXW DE-46354 Südlohn, DE-38820 Halberstadt, unpacked
Freight charges valid CPT Great Britain, islands & the following post code areas excluded: IC, ZE

BAUER GmbH
Eichendorffstr. 62
46354 Südlohn, Germany

Tel. +49 2862 70 90
info@bauer-suedlohn.com
www.bauer-suedlohn.com

Geschäftsführer
Patrick Bauer, Pascal Bauer
Amtsgericht Coesfeld HRB 5259

TÜVNORD
TÜV NORD CERT GmbH
DIN EN ISO 9001
tuev-nord.de

Price List 0726 en-GB
Forklift Truck Attachments

Container With Drop Away Base Type SB	Category	Price	Freight charges	Price including freight charges
Castor Set, polyamide, Load capacity 1350 kg / castor set	A	192,–	15,–	207,–
Heavy-duty Castor Set, polyamide, Load capacity 2550 kg / castor set	A	379,–	15,–	394,–
SB 1000, painted	B	1295,–	383,–	1678,–
Lid, galvanized	B	143,–	16,–	159,–
Castor Set, polyamide, Load capacity 1350 kg / castor set	A	192,–	15,–	207,–
Heavy-duty Castor Set, polyamide, Load capacity 2550 kg / castor set	A	379,–	15,–	394,–
SB 1000, hot-dip galvanized	B	1801,–	383,–	2184,–
Lid, galvanized	B	143,–	16,–	159,–
Castor Set, polyamide, Load capacity 1350 kg / castor set	A	192,–	15,–	207,–
Heavy-duty Castor Set, polyamide, Load capacity 2550 kg / castor set	A	379,–	15,–	394,–
SB 1500, painted	B	1755,–	383,–	2138,–
Lid, galvanized	B	254,–	21,–	275,–
Castor Set, polyamide, Load capacity 1350 kg / castor set	A	192,–	15,–	207,–
Heavy-duty Castor Set, polyamide, Load capacity 2550 kg / castor set	A	379,–	15,–	394,–
SB 1500, hot-dip galvanized	B	2443,–	459,–	2902,–
Lid, galvanized	B	254,–	21,–	275,–
Castor Set, polyamide, Load capacity 1350 kg / castor set	A	192,–	15,–	207,–
Heavy-duty Castor Set, polyamide, Load capacity 2550 kg / castor set	A	379,–	15,–	394,–
SB 2000, painted	B	1803,–	459,–	2262,–
Lid, galvanized	B	254,–	21,–	275,–
Castor Set, polyamide, Load capacity 1350 kg / castor set	A	192,–	15,–	207,–
Heavy-duty Castor Set, polyamide, Load capacity 2550 kg / castor set	A	379,–	15,–	394,–
SB 2000, hot-dip galvanized	B	2581,–	459,–	3040,–
Lid, galvanized	B	254,–	21,–	275,–
Castor Set, polyamide, Load capacity 1350 kg / castor set	A	192,–	15,–	207,–
Heavy-duty Castor Set, polyamide, Load capacity 2550 kg / castor set	A	379,–	15,–	394,–

Collecting System Type SBS	Category	Price	Freight charges	Price including freight charges
SBS 500, painted	C	399,–	274,–	673,–
Trolley TW 500, hot-dip galvanized	C	258,–	192,–	450,–
SBS 500, hot-dip galvanized	C	472,–	274,–	746,–
Trolley TW 500, hot-dip galvanized	C	258,–	192,–	450,–
SBS 1000, painted	C	509,–	274,–	783,–
Trolley TW 1000, hot-dip galvanized	C	297,–	192,–	489,–
SBS 1000, hot-dip galvanized	C	626,–	274,–	900,–
Trolley TW 1000, hot-dip galvanized	C	297,–	192,–	489,–
SBS 2000, painted	C	807,–	434,–	1241,–
Trolley TW 2000, hot-dip galvanized	C	505,–	192,–	697,–
SBS 2000, hot-dip galvanized	C	968,–	434,–	1402,–
Trolley TW 2000, hot-dip galvanized	C	505,–	192,–	697,–

Filling Hopper Type SBT	Category	Price	Freight charges	Price including freight charges
SBT, painted	A	1671,–	383,–	2054,–

Prices in EUR, valid EXW DE-46354 Südlohn, DE-38820 Halberstadt, unpacked
Freight charges valid CPT Great Britain, islands & the following post code areas excluded: IC, ZE

BAUER GmbH
Eichendorffstr. 62
46354 Südlohn, Germany

Tel. +49 2862 70 90
info@bauer-suedlohn.com
www.bauer-suedlohn.com

Geschäftsführer
Patrick Bauer, Pascal Bauer
Amtsgericht Coesfeld HRB 5259

TÜVNORD
TÜV NORD CERT GmbH
DIN EN ISO 9001
tuev-nord.de

Price List 0726 en-GB
Forklift Truck Attachments

Snowdozer Type SCH-F	Category	Price	Freight charges	Price including freight charges
SCH-F 150, painted	A	2233,–	383,–	2616,–
SCH-F 180, painted	A	2507,–	383,–	2890,–
SCH-F 210, painted	A	2818,–	383,–	3201,–
SCH-F 240, painted	A	3095,–	512,–	3607,–

Snowdozer Type SCH-G	Category	Price	Freight charges	Price including freight charges
SCH-G 150, painted	A	1584,–	274,–	1858,–
SCH-G 180, painted	A	1730,–	274,–	2004,–
SCH-G 210, painted	A	1998,–	383,–	2381,–
SCH-G 240, painted	A	2160,–	436,–	2596,–

Snowdozer Type SCH-L	Category	Price	Freight charges	Price including freight charges
SCH-L 1500, painted	A	1182,–	274,–	1456,–
SCH-L 1500, hot-dip galvanized	A	1310,–	274,–	1584,–
SCH-L 1800, painted	A	1380,–	274,–	1654,–
SCH-L 1800, hot-dip galvanized	A	1532,–	274,–	1806,–

Snow Plough Type SCH-P-G	Category	Price	Freight charges	Price including freight charges
SCH-P-G 150, painted	A	2493,–	383,–	2876,–
SCH-P-G 180, painted	A	2677,–	383,–	3060,–
SCH-P-G 210, painted	A	2870,–	383,–	3253,–
SCH-P-G 240, painted	A	3408,–	436,–	3844,–

Snow Plough Type SCH-P-S	Category	Price	Freight charges	Price including freight charges
SCH-P-S 150, painted	A	2318,–	383,–	2701,–
SCH-P-S 180, painted	A	2476,–	383,–	2859,–
SCH-P-S 210, painted	A	2629,–	383,–	3012,–
SCH-P-S 240, painted	A	3128,–	436,–	3564,–

Snow Plough Type SCH-P-V	Category	Price	Freight charges	Price including freight charges
SCH-P-V 150, painted	A	2681,–	383,–	3064,–
SCH-P-V 180, painted	A	2949,–	383,–	3332,–
SCH-P-V 210, painted	A	3200,–	383,–	3583,–
SCH-P-V 240, painted	A	3741,–	436,–	4177,–

Snowdozer Type SCH-S	Category	Price	Freight charges	Price including freight charges
SCH-S 150, painted	A	1407,–	274,–	1681,–
SCH-S 180, painted	A	1528,–	274,–	1802,–
SCH-S 210, painted	A	1760,–	383,–	2143,–
SCH-S 240, painted	A	1880,–	436,–	2316,–

Snow Plough Type SCH-U-G	Category	Price	Freight charges	Price including freight charges
SCH-U-G 150, painted	A	2493,–	383,–	2876,–
SCH-U-G 180, painted	A	2677,–	383,–	3060,–

Prices in EUR, valid EXW DE-46354 Südlohn, DE-38820 Halberstadt, unpacked
Freight charges valid CPT Great Britain, islands & the following post code areas excluded: IC, ZE

BAUER GmbH
Eichendorffstr. 62
46354 Südlohn, Germany

Tel. +49 2862 70 90
info@bauer-suedlohn.com
www.bauer-suedlohn.com

Geschäftsführer
Patrick Bauer, Pascal Bauer
Amtsgericht Coesfeld HRB 5259

TÜVNORD
TÜV NORD CERT GmbH
DIN EN ISO 9001
tuev-nord.de

Price List 0726 en-GB
Forklift Truck Attachments

Snow Plough Type SCH-U-G	Category	Price	Freight charges	Price including freight charges
SCH-U-G 210, painted	A	2870,–	383,–	3253,–
SCH-U-G 240, painted	A	3408,–	436,–	3844,–

Snow Plough Type SCH-U-S	Category	Price	Freight charges	Price including freight charges
SCH-U-S 150, painted	A	2318,–	383,–	2701,–
SCH-U-S 180, painted	A	2476,–	383,–	2859,–
SCH-U-S 210, painted	A	2629,–	383,–	3012,–
SCH-U-S 240, painted	A	3128,–	436,–	3564,–

Snow Plough Type SCH-U-V	Category	Price	Freight charges	Price including freight charges
SCH-U-V 150, painted	A	2681,–	383,–	3064,–
SCH-U-V 180, painted	A	2949,–	383,–	3332,–
SCH-U-V 210, painted	A	3200,–	383,–	3583,–
SCH-U-V 240, painted	A	3741,–	436,–	4177,–

Snowdozer Type SCH-V	Category	Price	Freight charges	Price including freight charges
SCH-V 150, painted	A	1769,–	274,–	2043,–
SCH-V 180, painted	A	1991,–	274,–	2265,–
SCH-V 210, painted	A	2331,–	383,–	2714,–
SCH-V 240, painted	A	2492,–	436,–	2928,–

Silo Container Type SG	Category	Price	Freight charges	Price including freight charges
SG 375, painted	E	1014,–	274,–	1288,–
Lid, galvanized	E	131,–	28,–	159,–
SG 375, hot-dip galvanized	E	1760,–	274,–	2034,–
Lid, galvanized	E	131,–	28,–	159,–
SG 600, painted	E	1209,–	274,–	1483,–
Lid, galvanized	E	131,–	28,–	159,–
SG 600, hot-dip galvanized	E	1951,–	274,–	2225,–
Lid, galvanized	E	131,–	28,–	159,–

Silo Container Type SG-D	Category	Price	Freight charges	Price including freight charges
SG-D 375, painted	E	1014,–	192,–	1206,–
Lid, galvanized	E	131,–	28,–	159,–
SG-D 375, hot-dip galvanized	E	1760,–	274,–	2034,–
Lid, galvanized	E	131,–	28,–	159,–
SG-D 600, painted	E	1209,–	274,–	1483,–
Lid, galvanized	E	131,–	28,–	159,–
SG-D 600, hot-dip galvanized	E	1951,–	274,–	2225,–
Lid, galvanized	E	131,–	28,–	159,–

Silo Container Type SGK	Category	Price	Freight charges	Price including freight charges
SGK 50, painted	A	1115,–	274,–	1389,–
SGK 50, hot-dip galvanized	A	1142,–	274,–	1416,–
SGK 75, painted	A	1214,–	274,–	1488,–

Prices in EUR, valid EXW DE-46354 Südlohn, DE-38820 Halberstadt, unpacked
Freight charges valid CPT Great Britain, islands & the following post code areas excluded: IC, ZE

BAUER GmbH
Eichendorffstr. 62
46354 Südlohn, Germany

Tel. +49 2862 70 90
info@bauer-suedlohn.com
www.bauer-suedlohn.com

Geschäftsführer
Patrick Bauer, Pascal Bauer
Amtsgericht Coesfeld HRB 5259

TÜVNORD
TÜV NORD CERT GmbH
DIN EN ISO 9001
tuev-nord.de

Price List 0726 en-GB
Forklift Truck Attachments

Silo Container Type SGK	Category	Price	Freight charges	Price including freight charges
SGK 75, hot-dip galvanized	A	1251,–	274,–	1525,–
SGK 100, painted	A	1327,–	274,–	1601,–
SGK 100, hot-dip galvanized	A	1367,–	274,–	1641,–

Silo Container Type SGS	Category	Price	Freight charges	Price including freight charges
SGS 50, painted	A	885,–	192,–	1077,–
SGS 50, hot-dip galvanized	A	902,–	274,–	1176,–
SGS 75, painted	A	982,–	274,–	1256,–
SGS 75, hot-dip galvanized	A	1015,–	274,–	1289,–
SGS 100, painted	A	1078,–	274,–	1352,–
SGS 100, hot-dip galvanized	A	1110,–	274,–	1384,–

Swarf Tilting Container Type SGU	Category	Price	Freight charges	Price including freight charges
SGU 30, painted	A	940,–	274,–	1214,–
Lid, galvanized	A	98,–	18,–	116,–
Castor Set, polyamide, Load capacity 1350 kg / castor set	A	192,–	15,–	207,–
Crane lifting eyes for use with a crane	A	106,–	8,–	114,–
Support legs, 100 mm ground leeway	A	70,–	8,–	78,–
SGU 30, hot-dip galvanized	A	1117,–	274,–	1391,–
Lid, galvanized	A	98,–	18,–	116,–
Castor Set, polyamide, Load capacity 1350 kg / castor set	A	192,–	15,–	207,–
Crane lifting eyes for use with a crane	A	106,–	8,–	114,–
Support legs, 100 mm ground leeway	A	70,–	8,–	78,–
SGU 50, painted	A	1163,–	274,–	1437,–
Lid, galvanized	A	98,–	18,–	116,–
Castor Set, polyamide, Load capacity 1350 kg / castor set	A	192,–	15,–	207,–
Adjustable dumping brake	A	464,–	10,–	474,–
Crane lifting eyes for use with a crane	A	106,–	8,–	114,–
Support legs, 100 mm ground leeway	A	70,–	8,–	78,–
SGU 50, hot-dip galvanized	A	1407,–	274,–	1681,–
Lid, galvanized	A	98,–	18,–	116,–
Castor Set, polyamide, Load capacity 1350 kg / castor set	A	192,–	15,–	207,–
Adjustable dumping brake	A	464,–	10,–	474,–
Crane lifting eyes for use with a crane	A	106,–	8,–	114,–
Support legs, 100 mm ground leeway	A	70,–	8,–	78,–
SGU 75, painted	A	1312,–	274,–	1586,–
Lid, galvanized	A	139,–	26,–	165,–
Castor Set, polyamide, Load capacity 1350 kg / castor set	A	192,–	15,–	207,–
Adjustable dumping brake	A	464,–	10,–	474,–
Crane lifting eyes for use with a crane	A	106,–	8,–	114,–
Support legs, 100 mm ground leeway	A	70,–	8,–	78,–
SGU 75, hot-dip galvanized	A	1623,–	274,–	1897,–
Lid, galvanized	A	139,–	26,–	165,–
Castor Set, polyamide, Load capacity 1350 kg / castor set	A	192,–	15,–	207,–
Adjustable dumping brake	A	464,–	10,–	474,–

Prices in EUR, valid EXW DE-46354 Südlohn, DE-38820 Halberstadt, unpacked
Freight charges valid CPT Great Britain, islands & the following post code areas excluded: IC, ZE

BAUER GmbH
Eichendorffstr. 62
46354 Südlohn, Germany

Tel. +49 2862 70 90
info@bauer-suedlohn.com
www.bauer-suedlohn.com

Geschäftsführer
Patrick Bauer, Pascal Bauer
Amtsgericht Coesfeld HRB 5259

TÜVNORD
TÜV NORD CERT GmbH
DIN EN ISO 9001
tuev-nord.de

Price List 0726 en-GB
Forklift Truck Attachments

Swarf Tilting Container Type SGU	Category	Price	Freight charges	Price including freight charges
Crane lifting eyes for use with a crane	A	106,–	8,–	114,–
Support legs, 100 mm ground leeway	A	70,–	8,–	78,–
SGU 100, painted	A	1571,–	383,–	1954,–
Lid, galvanized	A	192,–	27,–	219,–
Castor Set, polyamide, Load capacity 1350 kg / castor set	A	192,–	15,–	207,–
Adjustable dumping brake	A	464,–	10,–	474,–
Crane lifting eyes for use with a crane	A	106,–	8,–	114,–
Support legs, 100 mm ground leeway	A	70,–	8,–	78,–
SGU 100, hot-dip galvanized	A	2120,–	383,–	2503,–
Lid, galvanized	A	192,–	27,–	219,–
Castor Set, polyamide, Load capacity 1350 kg / castor set	A	192,–	15,–	207,–
Adjustable dumping brake	A	464,–	10,–	474,–
Crane lifting eyes for use with a crane	A	106,–	8,–	114,–
Support legs, 100 mm ground leeway	A	70,–	8,–	78,–
SGU 150, painted	A	1764,–	383,–	2147,–
Lid, galvanized	A	192,–	27,–	219,–
Castor Set, polyamide, Load capacity 1350 kg / castor set	A	192,–	15,–	207,–
Adjustable dumping brake	A	464,–	10,–	474,–
Crane lifting eyes for use with a crane	A	106,–	8,–	114,–
Support legs, 100 mm ground leeway	A	70,–	8,–	78,–
SGU 150, hot-dip galvanized	A	2242,–	383,–	2625,–
Lid, galvanized	A	192,–	27,–	219,–
Castor Set, polyamide, Load capacity 1350 kg / castor set	A	192,–	15,–	207,–
Adjustable dumping brake	A	464,–	10,–	474,–
Crane lifting eyes for use with a crane	A	106,–	8,–	114,–
Support legs, 100 mm ground leeway	A	70,–	8,–	78,–
SGU 200, painted	A	2215,–	459,–	2674,–
Lid, galvanized	A	226,–	32,–	258,–
Castor Set, polyamide, Load capacity 1350 kg / castor set	A	192,–	15,–	207,–
Adjustable dumping brake	A	464,–	10,–	474,–
Crane lifting eyes for use with a crane	A	106,–	8,–	114,–
Support legs, 100 mm ground leeway	A	70,–	8,–	78,–
SGU 200, hot-dip galvanized	A	2779,–	459,–	3238,–
Castor Set, polyamide, Load capacity 1350 kg / castor set	A	192,–	15,–	207,–
Lid, galvanized	A	226,–	32,–	258,–
Adjustable dumping brake	A	464,–	10,–	474,–
Crane lifting eyes for use with a crane	A	106,–	8,–	114,–
Support legs, 100 mm ground leeway	A	70,–	8,–	78,–

Swarf Tilting Container Type SGU-RZ	Category	Price	Freight charges	Price including freight charges
SGU-RZ 30, painted	A	972,–	274,–	1246,–
Lid, galvanized	A	95,–	18,–	113,–
SGU-RZ 30, hot-dip galvanized	A	1097,–	274,–	1371,–
Lid, galvanized	A	95,–	18,–	113,–
SGU-RZ 55, painted	A	1202,–	274,–	1476,–
Lid, galvanized	A	95,–	18,–	113,–

Prices in EUR, valid EXW DE-46354 Südlohn, DE-38820 Halberstadt, unpacked
Freight charges valid CPT Great Britain, islands & the following post code areas excluded: IC, ZE

BAUER GmbH
Eichendorffstr. 62
46354 Südlohn, Germany

Tel. +49 2862 70 90
info@bauer-suedlohn.com
www.bauer-suedlohn.com

Geschäftsführer
Patrick Bauer, Pascal Bauer
Amtsgericht Coesfeld HRB 5259

TÜVNORD
TÜV NORD CERT GmbH
DIN EN ISO 9001
tuev-nord.de

Price List 0726 en-GB
Forklift Truck Attachments

Swarf Tilting Container Type SGU-RZ	Category	Price	Freight charges	Price including freight charges
SGU-RZ 55, hot-dip galvanized	A	1314,–	274,–	1588,–
Lid, galvanized	A	95,–	18,–	113,–

Gritter Type SH	Category	Price	Freight charges	Price including freight charges
SH, painted	A	3569,–	274,–	3843,–
Tarpaulin	A	122,–	10,–	132,–

Forklift Safety Cage Type SIKO	Category	Price	Freight charges	Price including freight charges
SIKO, painted	A	726,–	274,–	1000,–
Castor Set, polyamide, Load capacity 1050 kg / castor set	A	136,–	15,–	151,–

Forklift Safety Cage Type SIKO/L	Category	Price	Freight charges	Price including freight charges
SIKO/L, painted	A	878,–	274,–	1152,–
Castor Set, polyamide, Load capacity 1050 kg / castor set	A	136,–	15,–	151,–

Forklift Safety Cage Type SIKO-G	Category	Price	Freight charges	Price including freight charges
SIKO-G, painted	A	657,–	192,–	849,–

Forklift Safety Cage Type SIKO-M	Category	Price	Freight charges	Price including freight charges
SIKO-M, painted	A	529,–	192,–	721,–

Heavy Duty Tilting Container Type SK	Category	Price	Freight charges	Price including freight charges
SK 300, painted	A	1281,–	383,–	1664,–
Lid, galvanized	A	174,–	18,–	192,–
Heavy-duty Castor Set, polyamide, Load capacity 2550 kg / castor set	A	379,–	15,–	394,–
Skip Body Welded Oil and Watertight	A	78,–	0,–	78,–
SK 300, hot-dip galvanized	A	1555,–	383,–	1938,–
Lid, galvanized	A	174,–	18,–	192,–
Heavy-duty Castor Set, polyamide, Load capacity 2550 kg / castor set	A	379,–	15,–	394,–
Skip Body Welded Oil and Watertight	A	78,–	0,–	78,–
SK 600, painted	A	1386,–	383,–	1769,–
Lid, galvanized	A	196,–	22,–	218,–
Heavy-duty Castor Set, polyamide, Load capacity 2550 kg / castor set	A	379,–	15,–	394,–
Skip Body Welded Oil and Watertight	A	78,–	0,–	78,–
SK 600, hot-dip galvanized	A	1724,–	459,–	2183,–
Lid, galvanized	A	196,–	22,–	218,–
Heavy-duty Castor Set, polyamide, Load capacity 2550 kg / castor set	A	379,–	15,–	394,–
Skip Body Welded Oil and Watertight	A	78,–	0,–	78,–
SK 900, painted	A	1510,–	459,–	1969,–
Lid, galvanized	A	223,–	27,–	250,–
Heavy-duty Castor Set, polyamide, Load capacity 2550 kg / castor set	A	379,–	15,–	394,–
Skip Body Welded Oil and Watertight	A	78,–	0,–	78,–
SK 900, hot-dip galvanized	A	1941,–	459,–	2400,–
Lid, galvanized	A	223,–	27,–	250,–
Heavy-duty Castor Set, polyamide, Load capacity 2550 kg / castor set	A	379,–	15,–	394,–

Prices in EUR, valid EXW DE-46354 Südlohn, DE-38820 Halberstadt, unpacked
Freight charges valid CPT Great Britain, islands & the following post code areas excluded: IC, ZE

BAUER GmbH
Eichendorffstr. 62
46354 Südlohn, Germany

Tel. +49 2862 70 90
info@bauer-suedlohn.com
www.bauer-suedlohn.com

Geschäftsführer
Patrick Bauer, Pascal Bauer
Amtsgericht Coesfeld HRB 5259

TÜVNORD
TÜV NORD CERT GmbH
DIN EN ISO 9001
tuev-nord.de

Price List 0726 en-GB
Forklift Truck Attachments

Heavy Duty Tilting Container Type SK	Category	Price	Freight charges	Price including freight charges
Skip Body Welded Oil and Watertight	A	78,–	0,–	78,–
SK 1200, painted	A	1770,–	459,–	2229,–
Lid, galvanized	A	223,–	26,–	249,–
Heavy-duty Castor Set, polyamide, Load capacity 2550 kg / castor set	A	379,–	15,–	394,–
Skip Body Welded Oil and Watertight	A	121,–	0,–	121,–
SK 1200, hot-dip galvanized	A	2277,–	624,–	2901,–
Lid, galvanized	A	223,–	26,–	249,–
Heavy-duty Castor Set, polyamide, Load capacity 2550 kg / castor set	A	379,–	15,–	394,–
Skip Body Welded Oil and Watertight	A	121,–	0,–	121,–
SK 1700, painted	A	1862,–	624,–	2486,–
Lid, galvanized	A	276,–	33,–	309,–
Heavy-duty Castor Set, polyamide, Load capacity 2550 kg / castor set	A	379,–	15,–	394,–
Skip Body Welded Oil and Watertight	A	121,–	0,–	121,–
SK 1700, hot-dip galvanized	A	2492,–	624,–	3116,–
Lid, galvanized	A	276,–	33,–	309,–
Heavy-duty Castor Set, polyamide, Load capacity 2550 kg / castor set	A	379,–	15,–	394,–
Skip Body Welded Oil and Watertight	A	121,–	0,–	121,–
SK 2100, painted	A	2032,–	624,–	2656,–
Lid, galvanized	A	360,–	39,–	399,–
Heavy-duty Castor Set, polyamide, Load capacity 2550 kg / castor set	A	379,–	15,–	394,–
Skip Body Welded Oil and Watertight	A	121,–	0,–	121,–
SK 2100, hot-dip galvanized	A	2739,–	624,–	3363,–
Lid, galvanized	A	360,–	39,–	399,–
Heavy-duty Castor Set, polyamide, Load capacity 2550 kg / castor set	A	379,–	15,–	394,–
Skip Body Welded Oil and Watertight	A	121,–	0,–	121,–

Broom Type SKB	Category	Price	Freight charges	Price including freight charges
SKB 100, painted	A	958,–	192,–	1150,–
SKB 150, painted	A	1197,–	192,–	1389,–
SKB 200, painted	A	1475,–	192,–	1667,–

Broom Type SKB-O	Category	Price	Freight charges	Price including freight charges
SKB-O 100, painted	A	658,–	192,–	850,–
SKB-O 150, painted	A	898,–	192,–	1090,–
SKB-O 200, painted	A	1176,–	192,–	1368,–

Swarf Tipping Skip Type SKK	Category	Price	Freight charges	Price including freight charges
SKK 250, painted	E	534,–	192,–	726,–
Lid, galvanized	E	136,–	15,–	151,–
Castor Set, polyamide, Load capacity 1050 kg / castor set	A	136,–	15,–	151,–
Castor Set, solid rubber, Load capacity 615 kg / castor set	E	103,–	15,–	118,–
SKK 250, hot-dip galvanized	E	583,–	192,–	775,–
Lid, galvanized	E	136,–	15,–	151,–
Castor Set, polyamide, Load capacity 1050 kg / castor set	A	136,–	15,–	151,–
Castor Set, solid rubber, Load capacity 615 kg / castor set	E	103,–	15,–	118,–

Prices in EUR, valid EXW DE-46354 Südlohn, DE-38820 Halberstadt, unpacked
Freight charges valid CPT Great Britain, islands & the following post code areas excluded: IC, ZE

BAUER GmbH
Eichendorffstr. 62
46354 Südlohn, Germany

Tel. +49 2862 70 90
info@bauer-suedlohn.com
www.bauer-suedlohn.com

Geschäftsführer
Patrick Bauer, Pascal Bauer
Amtsgericht Coesfeld HRB 5259

TÜVNORD
TÜV NORD CERT GmbH
DIN EN ISO 9001
tuev-nord.de

Price List 0726 en-GB
Forklift Truck Attachments

Swarf Tipping Skip Type SKK	Category	Price	Freight charges	Price including freight charges
SKK 400, painted	E	600,–	192,–	792,–
Lid, galvanized	E	156,–	16,–	172,–
Castor Set, polyamide, Load capacity 1050 kg / castor set	A	136,–	15,–	151,–
Castor Set, solid rubber, Load capacity 615 kg / castor set	E	103,–	15,–	118,–
SKK 400, hot-dip galvanized	E	649,–	192,–	841,–
Lid, galvanized	E	156,–	16,–	172,–
Castor Set, polyamide, Load capacity 1050 kg / castor set	A	136,–	15,–	151,–
Castor Set, solid rubber, Load capacity 615 kg / castor set	E	103,–	15,–	118,–
SKK 600, painted	E	815,–	274,–	1089,–
Lid, galvanized	E	173,–	20,–	193,–
Castor Set, polyamide, Load capacity 1050 kg / castor set	A	136,–	15,–	151,–
Castor Set, solid rubber, Load capacity 615 kg / castor set	E	103,–	15,–	118,–
SKK 600, hot-dip galvanized	E	914,–	274,–	1188,–
Lid, galvanized	E	173,–	20,–	193,–
Castor Set, polyamide, Load capacity 1050 kg / castor set	A	136,–	15,–	151,–
Castor Set, solid rubber, Load capacity 615 kg / castor set	E	103,–	15,–	118,–
SKK 800, painted	E	872,–	274,–	1146,–
Lid, galvanized	E	181,–	21,–	202,–
Castor Set, polyamide, Load capacity 1050 kg / castor set	A	136,–	15,–	151,–
Castor Set, solid rubber, Load capacity 615 kg / castor set	E	103,–	15,–	118,–
SKK 800, hot-dip galvanized	E	980,–	274,–	1254,–
Lid, galvanized	E	181,–	21,–	202,–
Castor Set, polyamide, Load capacity 1050 kg / castor set	A	136,–	15,–	151,–
Castor Set, solid rubber, Load capacity 615 kg / castor set	E	103,–	15,–	118,–
SKK 1000, painted	E	930,–	274,–	1204,–
Lid, galvanized	E	193,–	22,–	215,–
Castor Set, polyamide, Load capacity 1050 kg / castor set	A	136,–	15,–	151,–
Castor Set, solid rubber, Load capacity 615 kg / castor set	E	103,–	15,–	118,–
SKK 1000, hot-dip galvanized	E	1063,–	274,–	1337,–
Lid, galvanized	E	193,–	22,–	215,–
Castor Set, polyamide, Load capacity 1050 kg / castor set	A	136,–	15,–	151,–
Castor Set, solid rubber, Load capacity 615 kg / castor set	E	103,–	15,–	118,–

Swarf Tilting Container Type SKM	Category	Price	Freight charges	Price including freight charges
SKM 30, painted	A	950,–	274,–	1224,–
Lid, galvanized	A	104,–	18,–	122,–
SKM 30, hot-dip galvanized	A	1148,–	274,–	1422,–
Lid, galvanized	A	104,–	18,–	122,–
SKM 50, painted	A	1220,–	274,–	1494,–
Lid, galvanized	A	158,–	28,–	186,–
SKM 50, hot-dip galvanized	A	1478,–	274,–	1752,–
Lid, galvanized	A	158,–	28,–	186,–
SKM 75, painted	A	1469,–	274,–	1743,–
Lid, galvanized	A	175,–	33,–	208,–
SKM 75, hot-dip galvanized	A	1790,–	383,–	2173,–
Lid, galvanized	A	175,–	33,–	208,–

Prices in EUR, valid EXW DE-46354 Südlohn, DE-38820 Halberstadt, unpacked
Freight charges valid CPT Great Britain, islands & the following post code areas excluded: IC, ZE

BAUER GmbH
Eichendorffstr. 62
46354 Südlohn, Germany

Tel. +49 2862 70 90
info@bauer-suedlohn.com
www.bauer-suedlohn.com

Geschäftsführer
Patrick Bauer, Pascal Bauer
Amtsgericht Coesfeld HRB 5259

TÜVNORD
TÜV NORD CERT GmbH
DIN EN ISO 9001
tuev-nord.de

Price List 0726 en-GB
Forklift Truck Attachments

Swarf Tipping Skip Type SKN	Category	Price	Freight charges	Price including freight charges
SKN 250, painted	E	534,–	192,–	726,–
Lid, galvanized	E	136,–	15,–	151,–
Castor Set, polyamide, Load capacity 1050 kg / castor set	A	136,–	15,–	151,–
Castor Set, solid rubber, Load capacity 615 kg / castor set	E	103,–	15,–	118,–
SKN 250, hot-dip galvanized	E	583,–	192,–	775,–
Lid, galvanized	E	136,–	15,–	151,–
Castor Set, polyamide, Load capacity 1050 kg / castor set	A	136,–	15,–	151,–
Castor Set, solid rubber, Load capacity 615 kg / castor set	E	103,–	15,–	118,–
SKN 400, painted	E	600,–	192,–	792,–
Lid, galvanized	E	156,–	16,–	172,–
Castor Set, polyamide, Load capacity 1050 kg / castor set	A	136,–	15,–	151,–
Castor Set, solid rubber, Load capacity 615 kg / castor set	E	103,–	15,–	118,–
SKN 400, hot-dip galvanized	E	649,–	192,–	841,–
Lid, galvanized	E	156,–	16,–	172,–
Castor Set, polyamide, Load capacity 1050 kg / castor set	A	136,–	15,–	151,–
Castor Set, solid rubber, Load capacity 615 kg / castor set	E	103,–	15,–	118,–

Swarf Tipping Skip Type SKS	Category	Price	Freight charges	Price including freight charges
SKS 400, painted	E	946,–	274,–	1220,–
SKS 550, painted	E	1013,–	274,–	1287,–
SKS 700, painted	E	1072,–	274,–	1346,–

Swarf Barrow Tipper Type SKW-ET	Category	Price	Freight charges	Price including freight charges
SKW-ET 250, painted	E	638,–	192,–	830,–
Lid, galvanized	E	136,–	15,–	151,–
SKW-ET 250, hot-dip galvanized	E	975,–	192,–	1167,–
Lid, galvanized	E	136,–	15,–	151,–
SKW-ET 400, painted	E	697,–	192,–	889,–
Lid, galvanized	E	156,–	16,–	172,–
SKW-ET 400, hot-dip galvanized	E	1071,–	192,–	1263,–
Lid, galvanized	E	156,–	16,–	172,–
SKW-ET 600, painted	E	851,–	274,–	1125,–
Lid, galvanized	E	173,–	20,–	193,–
SKW-ET 600, hot-dip galvanized	E	1233,–	274,–	1507,–
Lid, galvanized	E	173,–	20,–	193,–
SKW-ET 1000, painted	E	1032,–	274,–	1306,–
Lid, galvanized	E	193,–	22,–	215,–
SKW-ET 1000, hot-dip galvanized	E	1643,–	274,–	1917,–
Lid, galvanized	E	193,–	22,–	215,–

Mini Swarf Tilting Container Type SMGU	Category	Price	Freight charges	Price including freight charges
SMGU 230, painted	A	689,–	192,–	881,–
Lid, galvanized	A	131,–	18,–	149,–
Castor Set, polyamide, Load capacity 1050 kg / castor set	A	156,–	15,–	171,–
SMGU 230, hot-dip galvanized	A	775,–	274,–	1049,–

Prices in EUR, valid EXW DE-46354 Südlohn, DE-38820 Halberstadt, unpacked
Freight charges valid CPT Great Britain, islands & the following post code areas excluded: IC, ZE

BAUER GmbH
Eichendorffstr. 62
46354 Südlohn, Germany

Tel. +49 2862 70 90
info@bauer-suedlohn.com
www.bauer-suedlohn.com

Geschäftsführer
Patrick Bauer, Pascal Bauer
Amtsgericht Coesfeld HRB 5259

TÜVNORD
TÜV NORD CERT GmbH
DIN EN ISO 9001
tuev-nord.de

Price List 0726 en-GB
Forklift Truck Attachments

Mini Swarf Tilting Container Type SMGU	Category	Price	Freight charges	Price including freight charges
Lid, galvanized	A	131,–	18,–	149,–
Castor Set, polyamide, Load capacity 1050 kg / castor set	A	156,–	15,–	171,–
SMGU 270, painted	A	744,–	274,–	1018,–
Lid, galvanized	A	131,–	18,–	149,–
Castor Set, polyamide, Load capacity 1050 kg / castor set	A	156,–	15,–	171,–
SMGU 270, hot-dip galvanized	A	850,–	274,–	1124,–
Lid, galvanized	A	131,–	18,–	149,–
Castor Set, polyamide, Load capacity 1050 kg / castor set	A	156,–	15,–	171,–
SMGU 460, painted	A	935,–	274,–	1209,–
Lid, galvanized	A	169,–	22,–	191,–
Castor Set, polyamide, Load capacity 1050 kg / castor set	A	156,–	15,–	171,–
SMGU 460, hot-dip galvanized	A	1088,–	274,–	1362,–
Lid, galvanized	A	169,–	22,–	191,–
Castor Set, polyamide, Load capacity 1050 kg / castor set	A	156,–	15,–	171,–
SMGU 610, painted	A	1041,–	274,–	1315,–
Lid, galvanized	A	181,–	26,–	207,–
Castor Set, polyamide, Load capacity 1050 kg / castor set	A	156,–	15,–	171,–
SMGU 610, hot-dip galvanized	A	1209,–	274,–	1483,–
Lid, galvanized	A	181,–	26,–	207,–
Castor Set, polyamide, Load capacity 1050 kg / castor set	A	156,–	15,–	171,–

Silo Container Type SR	Category	Price	Freight charges	Price including freight charges
SR 375, painted	E	844,–	192,–	1036,–
Lid, galvanized	E	131,–	33,–	164,–
SR 375, hot-dip galvanized	E	1584,–	192,–	1776,–
Lid, galvanized	E	131,–	33,–	164,–
SR 600, painted	E	1048,–	274,–	1322,–
Lid, galvanized	E	131,–	33,–	164,–
SR 600, hot-dip galvanized	E	1801,–	274,–	2075,–
Lid, galvanized	E	131,–	33,–	164,–

Silo Container Type SR-D	Category	Price	Freight charges	Price including freight charges
SR-D 375, painted	E	844,–	192,–	1036,–
Lid, galvanized	E	131,–	33,–	164,–
SR-D 375, hot-dip galvanized	E	1584,–	192,–	1776,–
Lid, galvanized	E	131,–	33,–	164,–
SR-D 600, painted	E	1048,–	274,–	1322,–
Lid, galvanized	E	131,–	33,–	164,–
SR-D 600, hot-dip galvanized	E	1801,–	274,–	2075,–
Lid, galvanized	E	131,–	33,–	164,–

Silo Container Type SRE	Category	Price	Freight charges	Price including freight charges
SRE 375, painted	E	962,–	274,–	1236,–
Lid, galvanized	E	131,–	33,–	164,–
SRE 375, hot-dip galvanized	E	1723,–	274,–	1997,–

Prices in EUR, valid EXW DE-46354 Südlohn, DE-38820 Halberstadt, unpacked
Freight charges valid CPT Great Britain, islands & the following post code areas excluded: IC, ZE

BAUER GmbH
Eichendorffstr. 62
46354 Südlohn, Germany

Tel. +49 2862 70 90
info@bauer-suedlohn.com
www.bauer-suedlohn.com

Geschäftsführer
Patrick Bauer, Pascal Bauer
Amtsgericht Coesfeld HRB 5259

TÜVNORD
TÜV NORD CERT GmbH
DIN EN ISO 9001
tuev-nord.de

Price List 0726 en-GB
Forklift Truck Attachments

Silo Container Type SRE	Category	Price	Freight charges	Price including freight charges
Lid, galvanized	E	131,–	33,–	164,–
SRE 600, painted	E	1171,–	274,–	1445,–
Lid, galvanized	E	131,–	33,–	164,–
SRE 600, hot-dip galvanized	E	1857,–	274,–	2131,–
Lid, galvanized	E	131,–	33,–	164,–

Silo Container Type SRE-D	Category	Price	Freight charges	Price including freight charges
SRE-D 375, painted	E	962,–	192,–	1154,–
Lid, galvanized	E	131,–	33,–	164,–
SRE-D 375, hot-dip galvanized	E	1723,–	274,–	1997,–
Lid, galvanized	E	131,–	33,–	164,–
SRE-D 600, painted	E	1171,–	274,–	1445,–
Lid, galvanized	E	131,–	33,–	164,–
SRE-D 600, hot-dip galvanized	E	1857,–	274,–	2131,–
Lid, galvanized	E	131,–	33,–	164,–

Forklift Tender System Type STS	Category	Price	Freight charges	Price including freight charges
STS 2,5, painted	C	3857,–	on request	on request
STS 5,0, painted	C	4546,–	on request	on request

Spreader Type STW	Category	Price	Freight charges	Price including freight charges
STW 100, painted	A	1216,–	192,–	1408,–
Tarpaulin	A	116,–	10,–	126,–
STW 260, painted	A	2147,–	192,–	2339,–
Tarpaulin	A	122,–	10,–	132,–

Traverse for Big Bags Type TBB	Category	Price	Freight charges	Price including freight charges
TBB, painted	A	901,–	192,–	1093,–

Traverse For Big Bags Type TBB-E	Category	Price	Freight charges	Price including freight charges
TBB-E, painted	A	852,–	192,–	1044,–

Traverse For Big Bags Type TBB-W	Category	Price	Freight charges	Price including freight charges
TBB-W, painted	A	1093,–	192,–	1285,–

Mini Lifting Beam Type TM	Category	Price	Freight charges	Price including freight charges
TM 200-500, hot-dip galvanized	F	399,–	74,–	473,–
TM 400-800, hot-dip galvanized	F	429,–	74,–	503,–
TM 800-1200, hot-dip galvanized	F	566,–	74,–	640,–

Tilting Container Type TRIO	Category	Price	Freight charges	Price including freight charges
TRIO, painted	A	2333,–	459,–	2792,–
Lid, galvanized	A	215,–	26,–	241,–
Castor Set, polyamide, Load capacity 1350 kg / castor set	A	192,–	15,–	207,–

Prices in EUR, valid EXW DE-46354 Südlohn, DE-38820 Halberstadt, unpacked
Freight charges valid CPT Great Britain, islands & the following post code areas excluded: IC, ZE

BAUER GmbH
Eichendorffstr. 62
46354 Südlohn, Germany

Tel. +49 2862 70 90
info@bauer-suedlohn.com
www.bauer-suedlohn.com

Geschäftsführer
Patrick Bauer, Pascal Bauer
Amtsgericht Coesfeld HRB 5259

TÜVNORD
TÜV NORD CERT GmbH
DIN EN ISO 9001
tuev-nord.de

Price List 0726 en-GB
Forklift Truck Attachments

Tilting Container Type TRIO	Category	Price	Freight charges	Price including freight charges
Set of 5 self-adhesive stickers with symbols for: glass, paper, plastic, metal, residual waste	A	29,–	on request	on request

Universal Container Type UC	Category	Price	Freight charges	Price including freight charges
UC 500, painted	A	675,–	192,–	867,–
Lid, galvanized	A	168,–	16,–	184,–
Castor Set, polyamide, Load capacity 1350 kg / castor set	A	192,–	15,–	207,–
Pick-up Profile on Type UC for Traverse Type UCT	A	106,–	0,–	106,–
UC 500, hot-dip galvanized	A	771,–	274,–	1045,–
Lid, galvanized	A	168,–	16,–	184,–
Castor Set, polyamide, Load capacity 1350 kg / castor set	A	192,–	15,–	207,–
Pick-up Profile on Type UC for Traverse Type UCT	A	106,–	0,–	106,–
UC 750, painted	A	734,–	274,–	1008,–
Lid, galvanized	A	168,–	16,–	184,–
Castor Set, polyamide, Load capacity 1350 kg / castor set	A	192,–	15,–	207,–
Pick-up Profile on Type UC for Traverse Type UCT	A	106,–	0,–	106,–
UC 750, hot-dip galvanized	A	853,–	274,–	1127,–
Lid, galvanized	A	168,–	16,–	184,–
Castor Set, polyamide, Load capacity 1350 kg / castor set	A	192,–	15,–	207,–
Pick-up Profile on Type UC for Traverse Type UCT	A	106,–	0,–	106,–
UC 1000, painted	A	771,–	274,–	1045,–
Lid, galvanized	A	168,–	16,–	184,–
Castor Set, polyamide, Load capacity 1350 kg / castor set	A	192,–	15,–	207,–
Pick-up Profile on Type UC for Traverse Type UCT	A	106,–	0,–	106,–
UC 1000, hot-dip galvanized	A	894,–	274,–	1168,–
Lid, galvanized	A	168,–	16,–	184,–
Castor Set, polyamide, Load capacity 1350 kg / castor set	A	192,–	15,–	207,–
Pick-up Profile on Type UC for Traverse Type UCT	A	106,–	0,–	106,–

Hydraulic Traverse Type UCT	Category	Price	Freight charges	Price including freight charges
UCT, painted	A	2737,–	383,–	3120,–

Tilting Container Type VD	Category	Price	Freight charges	Price including freight charges
VD 500, painted	A	794,–	274,–	1068,–
Lid, galvanized	A	144,–	18,–	162,–
Castor Set, polyamide, Load capacity 1350 kg / castor set	A	192,–	15,–	207,–
Skip Body Welded Oil and Watertight	A	78,–	0,–	78,–
VD 500, hot-dip galvanized	A	1033,–	274,–	1307,–
Lid, galvanized	A	144,–	18,–	162,–
Castor Set, polyamide, Load capacity 1350 kg / castor set	A	192,–	15,–	207,–
Skip Body Welded Oil and Watertight	A	78,–	0,–	78,–
VD 650, painted	A	868,–	274,–	1142,–
Lid, galvanized	A	144,–	18,–	162,–
Castor Set, polyamide, Load capacity 1350 kg / castor set	A	192,–	15,–	207,–
Skip Body Welded Oil and Watertight	A	78,–	0,–	78,–
VD 650, hot-dip galvanized	A	1130,–	274,–	1404,–

Prices in EUR, valid EXW DE-46354 Südlohn, DE-38820 Halberstadt, unpacked
Freight charges valid CPT Great Britain, islands & the following post code areas excluded: IC, ZE

BAUER GmbH
Eichendorffstr. 62
46354 Südlohn, Germany

Tel. +49 2862 70 90
info@bauer-suedlohn.com
www.bauer-suedlohn.com

Geschäftsführer
Patrick Bauer, Pascal Bauer
Amtsgericht Coesfeld HRB 5259

TÜVNORD
TÜV NORD CERT GmbH
DIN EN ISO 9001
tuev-nord.de

Price List 0726 en-GB
Forklift Truck Attachments

Tilting Container Type VD	Category	Price	Freight charges	Price including freight charges
Lid, galvanized	A	144,–	18,–	162,–
Castor Set, polyamide, Load capacity 1350 kg / castor set	A	192,–	15,–	207,–
Skip Body Welded Oil and Watertight	A	78,–	0,–	78,–
VD 800, painted	A	991,–	274,–	1265,–
Lid, galvanized	A	174,–	22,–	196,–
Castor Set, polyamide, Load capacity 1350 kg / castor set	A	192,–	15,–	207,–
Skip Body Welded Oil and Watertight	A	78,–	0,–	78,–
VD 800, hot-dip galvanized	A	1346,–	274,–	1620,–
Lid, galvanized	A	174,–	22,–	196,–
Castor Set, polyamide, Load capacity 1350 kg / castor set	A	192,–	15,–	207,–
Skip Body Welded Oil and Watertight	A	78,–	0,–	78,–
VD 1000, painted	A	1041,–	274,–	1315,–
Lid, galvanized	A	174,–	22,–	196,–
Castor Set, polyamide, Load capacity 1350 kg / castor set	A	192,–	15,–	207,–
Skip Body Welded Oil and Watertight	A	121,–	0,–	121,–
VD 1000, hot-dip galvanized	A	1469,–	274,–	1743,–
Lid, galvanized	A	174,–	22,–	196,–
Castor Set, polyamide, Load capacity 1350 kg / castor set	A	192,–	15,–	207,–
Skip Body Welded Oil and Watertight	A	121,–	0,–	121,–

Tilting Container Type VG	Category	Price	Freight charges	Price including freight charges
VG 550, painted	A	812,–	274,–	1086,–
Lid, galvanized	A	144,–	18,–	162,–
Castor Set, polyamide, Load capacity 1350 kg / castor set	A	192,–	15,–	207,–
Skip Body Welded Oil and Watertight	A	78,–	0,–	78,–
VG 550, hot-dip galvanized	A	1058,–	274,–	1332,–
Lid, galvanized	A	144,–	18,–	162,–
Castor Set, polyamide, Load capacity 1350 kg / castor set	A	192,–	15,–	207,–
Skip Body Welded Oil and Watertight	A	78,–	0,–	78,–
VG 700, painted	A	962,–	274,–	1236,–
Lid, galvanized	A	144,–	18,–	162,–
Castor Set, polyamide, Load capacity 1350 kg / castor set	A	192,–	15,–	207,–
Skip Body Welded Oil and Watertight	A	78,–	0,–	78,–
VG 700, hot-dip galvanized	A	1252,–	274,–	1526,–
Lid, galvanized	A	144,–	18,–	162,–
Castor Set, polyamide, Load capacity 1350 kg / castor set	A	192,–	15,–	207,–
Skip Body Welded Oil and Watertight	A	78,–	0,–	78,–
VG 900, painted	A	1060,–	274,–	1334,–
Lid, galvanized	A	174,–	22,–	196,–
Castor Set, polyamide, Load capacity 1350 kg / castor set	A	192,–	15,–	207,–
Skip Body Welded Oil and Watertight	A	78,–	0,–	78,–
VG 900, hot-dip galvanized	A	1502,–	274,–	1776,–
Lid, galvanized	A	174,–	22,–	196,–
Castor Set, polyamide, Load capacity 1350 kg / castor set	A	192,–	15,–	207,–
Skip Body Welded Oil and Watertight	A	78,–	0,–	78,–
VG 1100, painted	A	1150,–	274,–	1424,–

Prices in EUR, valid EXW DE-46354 Südlohn, DE-38820 Halberstadt, unpacked
Freight charges valid CPT Great Britain, islands & the following post code areas excluded: IC, ZE

BAUER GmbH
Eichendorffstr. 62
46354 Südlohn, Germany

Tel. +49 2862 70 90
info@bauer-suedlohn.com
www.bauer-suedlohn.com

Geschäftsführer
Patrick Bauer, Pascal Bauer
Amtsgericht Coesfeld HRB 5259

TÜVNORD
TÜV NORD CERT GmbH
DIN EN ISO 9001
tuev-nord.de

Price List 0726 en-GB
Forklift Truck Attachments

Tilting Container Type VG	Category	Price	Freight charges	Price including freight charges
Lid, galvanized	A	174,–	22,–	196,–
Castor Set, polyamide, Load capacity 1350 kg / castor set	A	192,–	15,–	207,–
Skip Body Welded Oil and Watertight	A	121,–	0,–	121,–
VG 1100, hot-dip galvanized	A	1561,–	274,–	1835,–
Lid, galvanized	A	174,–	22,–	196,–
Castor Set, polyamide, Load capacity 1350 kg / castor set	A	192,–	15,–	207,–
Skip Body Welded Oil and Watertight	A	121,–	0,–	121,–

Prices in EUR, valid EXW DE-46354 Südlohn, DE-38820 Halberstadt, unpacked
Freight charges valid CPT Great Britain, islands & the following post code areas excluded: IC, ZE

BAUER GmbH
Eichendorffstr. 62
46354 Südlohn, Germany

Tel. +49 2862 70 90
info@bauer-suedlohn.com
www.bauer-suedlohn.com

Geschäftsführer
Patrick Bauer, Pascal Bauer
Amtsgericht Coesfeld HRB 5259

TÜVNORD
TÜV NORD CERT GmbH
DIN EN ISO 9001
tuev-nord.de

Price List 0726 en-GB
Workspace Material Handling

Battery Charging Station Type BL	Category	Price	Freight charges	Price including freight charges
BL 1, painted	A	1422,–	192,–	1614,–
Fire Extinguisher	A	204,–	14,–	218,–
Storage tray for water receptacle, painted	A	64,–	13,–	77,–
BL 2, painted	A	1798,–	192,–	1990,–
Fire Extinguisher	A	204,–	14,–	218,–
Storage tray for water receptacle, painted	A	64,–	13,–	77,–
BL 3, painted	A	1798,–	192,–	1990,–
Fire Extinguisher	A	204,–	14,–	218,–
Storage tray for water receptacle, painted	A	64,–	13,–	77,–

Drum Jack Roller Type FHR	Category	Price	Freight charges	Price including freight charges
FHR 600 F, painted	B	3286,–	383,–	3669,–
FHR 600 F, hot-dip galvanized	B	3641,–	383,–	4024,–
FHR 600 G, painted	B	2617,–	274,–	2891,–
FHR 600 G, hot-dip galvanized	B	2888,–	274,–	3162,–
FHR 600 K, painted	B	2617,–	274,–	2891,–
FHR 600 K, hot-dip galvanized	B	2888,–	274,–	3162,–

Drum Trolley Type FP-L	Category	Price	Freight charges	Price including freight charges
FP-L, galvanized	C	624,–	192,–	816,–

Drum Trolley Type FP-V	Category	Price	Freight charges	Price including freight charges
FP-V, galvanized	C	605,–	192,–	797,–

Drum Dolly Type FRW	Category	Price	Freight charges	Price including freight charges
FRW-I, hot-dip galvanized	A	116,–	74,–	190,–
FRW-II, hot-dip galvanized	A	154,–	74,–	228,–
FRW-III, hot-dip galvanized	A	207,–	192,–	399,–

Dolly Type GRW	Category	Price	Freight charges	Price including freight charges
GRW-I, hot-dip galvanized	F	126,–	74,–	200,–
Handle, hot-dip galvanized	F	55,–	10,–	65,–
GRW-II, hot-dip galvanized	F	143,–	74,–	217,–
Handle, hot-dip galvanized	F	55,–	10,–	65,–
GRW-III, hot-dip galvanized	F	179,–	192,–	371,–
Handle, hot-dip galvanized	F	55,–	10,–	65,–

Gas Cylinder Wall Bracket Type GWH	Category	Price	Freight charges	Price including freight charges
GWH 140-I, hot-dip galvanized	F	26,–	74,–	100,–
GWH 140-II, hot-dip galvanized	F	40,–	74,–	114,–

Prices in EUR, valid EXW DE-46354 Südlohn, DE-38820 Halberstadt, unpacked
Freight charges valid CPT Great Britain, islands & the following post code areas excluded: IC, ZE

BAUER GmbH
Eichendorffstr. 62
46354 Südlohn, Germany

Tel. +49 2862 70 90
info@bauer-suedlohn.com
www.bauer-suedlohn.com

Geschäftsführer
Patrick Bauer, Pascal Bauer
Amtsgericht Coesfeld HRB 5259

TÜVNORD
TÜV NORD CERT GmbH
DIN EN ISO 9001
tuev-nord.de

Price List 0726 en-GB
Workspace Material Handling

Gas Cylinder Wall Bracket Type GWH	Category	Price	Freight charges	Price including freight charges
GWH 140-III, hot-dip galvanized	F	59,–	74,–	133,–
GWH 230-I, hot-dip galvanized	F	28,–	74,–	102,–
GWH 230-II, hot-dip galvanized	F	43,–	74,–	117,–
GWH 230-III, hot-dip galvanized	F	65,–	74,–	139,–
GWH 320-I, hot-dip galvanized	F	29,–	74,–	103,–
GWH 320-II, hot-dip galvanized	F	48,–	74,–	122,–
GWH 320-III, hot-dip galvanized	F	72,–	74,–	146,–

Fork Lifter Type GZH-A	Category	Price	Freight charges	Price including freight charges
GZH-A, painted	F	114,–	74,–	188,–

Fork Lifter Type GZH-B	Category	Price	Freight charges	Price including freight charges
GZH-B, painted	F	114,–	74,–	188,–

Fork Pallet Type GZP	Category	Price	Freight charges	Price including freight charges
GZP 4, hot-dip galvanized	A	161,–	192,–	353,–
GZP 8, hot-dip galvanized	A	201,–	192,–	393,–

IBC Residue Drainer Type IR	Category	Price	Freight charges	Price including freight charges
IR-1, hot-dip galvanized	A	596,–	192,–	788,–
IR-2, hot-dip galvanized	A	711,–	192,–	903,–
IR-3, hot-dip galvanized	A	596,–	192,–	788,–

Tilting Canister Stand Type KAH	Category	Price	Freight charges	Price including freight charges
KAH-5, galvanized	A	96,–	74,–	170,–
KAH-25, galvanized	A	109,–	74,–	183,–
KAH-60, galvanized	A	140,–	74,–	214,–

Sheet Metal Storage Units With Trays Type KBR	Category	Price	Freight charges	Price including freight charges
KBR 1, painted	A	5985,–	968,–	6953,–
KBR 2, painted	A	6207,–	on request	on request
KBR 3, painted	A	6667,–	on request	on request

Liftomat Type L/E	Category	Price	Freight charges	Price including freight charges
L/E 1300, painted	B	4908,–	383,–	5291,–
L/E 1300, hot-dip galvanized	B	5578,–	383,–	5961,–

Liftomat Type L/M	Category	Price	Freight charges	Price including freight charges
L/M 600, painted	B	3553,–	274,–	3827,–
L/M 600, hot-dip galvanized	B	4025,–	274,–	4299,–
L/M 1300, painted	B	3986,–	383,–	4369,–
L/M 1300, hot-dip galvanized	B	4569,–	383,–	4952,–

Prices in EUR, valid EXW DE-46354 Südlohn, DE-38820 Halberstadt, unpacked
Freight charges valid CPT Great Britain, islands & the following post code areas excluded: IC, ZE

BAUER GmbH
Eichendorffstr. 62
46354 Südlohn, Germany

Tel. +49 2862 70 90
info@bauer-suedlohn.com
www.bauer-suedlohn.com

Geschäftsführer
Patrick Bauer, Pascal Bauer
Amtsgericht Coesfeld HRB 5259

TÜVNORD
TÜV NORD CERT GmbH
DIN EN ISO 9001
tuev-nord.de

Price List 0726 en-GB
Workspace Material Handling

Security Cage for Storage Type LBM	Category	Price	Freight charges	Price including freight charges
LBM 1500, hot-dip galvanized	A	2002,–	383,–	2385,–
LBM 3000, hot-dip galvanized	A	2747,–	624,–	3371,–
LBM 4500, hot-dip galvanized	A	3492,–	624,–	4116,–
LBM 6000, hot-dip galvanized	A	4232,–	791,–	5023,–

Wheelie Bin Tipping Station Type MKS	Category	Price	Freight charges	Price including freight charges
MKS-12V, painted	A	3745,–	274,–	4019,–
External Charger for 12 V electro-hydraulic constructions	A	201,–	15,–	216,–
MKS-230V, painted	A	3745,–	274,–	4019,–

Wheelie Bin Tipping Station Type MKS-F	Category	Price	Freight charges	Price including freight charges
MKS-F, painted	A	2459,–	274,–	2733,–

Wheelie Bin Tipping Station Type MKS-H	Category	Price	Freight charges	Price including freight charges
MKS-H, painted	A	2459,–	274,–	2733,–

Stillage Transport Cage Type MTP	Category	Price	Freight charges	Price including freight charges
MTP 2000, hot-dip galvanized	A	2196,–	383,–	2579,–
Tension belt	A	48,–	8,–	56,–
MTP 3000, hot-dip galvanized	A	2774,–	459,–	3233,–
Tension belt	A	48,–	8,–	56,–

Two-Wheeled Pallet Picker Type PZ	Category	Price	Freight charges	Price including freight charges
PZ, hot-dip galvanized	F	456,–	74,–	530,–

Tyre Fitting Equipment Type RM	Category	Price	Freight charges	Price including freight charges
RM, painted	F	458,–	74,–	532,–

Surround for Waste Bins Type SECOMAT	Category	Price	Freight charges	Price including freight charges
S 120-D, powder coated	B	682,–	192,–	874,–
S 120-K, powder coated	B	764,–	192,–	956,–
S 240-D, powder coated	B	782,–	192,–	974,–
S 240-K, powder coated	B	856,–	192,–	1048,–
S1100, powder-coated	B	791,–	192,–	983,–
S1100-W, powder-coated	B	1040,–	274,–	1314,–
S1100-WT, powder-coated	B	1305,–	274,–	1579,–
S1100-WTB, powder-coated	B	1408,–	274,–	1682,–
S4USE, powder coated	C	2656,–	383,–	3039,–

Gas Cylinder Pallet Type SFP	Category	Price	Freight charges	Price including freight charges
SFP 4, hot-dip galvanized	C	346,–	192,–	538,–
SFP 8, hot-dip galvanized	C	460,–	274,–	734,–

Prices in EUR, valid EXW DE-46354 Südlohn, DE-38820 Halberstadt, unpacked
Freight charges valid CPT Great Britain, islands & the following post code areas excluded: IC, ZE

BAUER GmbH
Eichendorffstr. 62
46354 Südlohn, Germany

Tel. +49 2862 70 90
info@bauer-suedlohn.com
www.bauer-suedlohn.com

Geschäftsführer
Patrick Bauer, Pascal Bauer
Amtsgericht Coesfeld HRB 5259

TÜVNORD
TÜV NORD CERT GmbH
DIN EN ISO 9001
tuev-nord.de

Price List 0726 en-GB
Workspace Material Handling

Loading Support Type VS	Category	Price	Freight charges	Price including freight charges
VS, painted	C	765,–	274,–	1039,–

Prices in EUR, valid EXW DE-46354 Südlohn, DE-38820 Halberstadt, unpacked
Freight charges valid CPT Great Britain, islands & the following post code areas excluded: IC, ZE

BAUER GmbH
Eichendorffstr. 62
46354 Südlohn, Germany

Tel. +49 2862 70 90
info@bauer-suedlohn.com
www.bauer-suedlohn.com

Geschäftsführer
Patrick Bauer, Pascal Bauer
Amtsgericht Coesfeld HRB 5259

TÜVNORD
TÜV NORD CERT GmbH
DIN EN ISO 9001
tuev-nord.de

Price List 0726 en-GB
Environment / Storage

Sump Trays Type SERIES 2000	Category	Price	Freight charges	Price including freight charges
2000, painted	B	250,–	192,–	442,–
2000, hot-dip galvanized	B	288,–	192,–	480,–
2002, painted	B	285,–	192,–	477,–
2002, hot-dip galvanized	B	322,–	192,–	514,–
2008, painted	B	250,–	192,–	442,–
2008, hot-dip galvanized	B	300,–	192,–	492,–
2010, painted	B	301,–	192,–	493,–
Drum Support FA 60-1, hot-dip galvanized	B	109,–	15,–	124,–
Drum Support FA 60-2, hot-dip galvanized	B	118,–	18,–	136,–
Drum Support FA 60-3, hot-dip galvanized	B	138,–	21,–	159,–
Drum Support FA 200-1, hot-dip galvanized	B	118,–	15,–	133,–
Can Shelf Type GR-A, galvanized	B	138,–	39,–	177,–
Can Shelf Type GR-B, galvanized	B	138,–	39,–	177,–
Can Shelf Type GR-C, galvanized	B	138,–	39,–	177,–
2010, hot-dip galvanized	B	351,–	192,–	543,–
Drum Support FA 60-1, hot-dip galvanized	B	109,–	15,–	124,–
Drum Support FA 60-2, hot-dip galvanized	B	118,–	18,–	136,–
Drum Support FA 60-3, hot-dip galvanized	B	138,–	21,–	159,–
Drum Support FA 200-1, hot-dip galvanized	B	118,–	15,–	133,–
Can Shelf Type GR-A, galvanized	B	138,–	39,–	177,–
Can Shelf Type GR-B, galvanized	B	138,–	39,–	177,–
Can Shelf Type GR-C, galvanized	B	138,–	39,–	177,–
2016, painted	B	262,–	192,–	454,–
2016, hot-dip galvanized	B	314,–	192,–	506,–
2018, painted	B	315,–	192,–	507,–
Drum Support FA 60-1, hot-dip galvanized	B	109,–	15,–	124,–
Drum Support FA 60-2, hot-dip galvanized	B	118,–	18,–	136,–
Drum Support FA 60-3, hot-dip galvanized	B	138,–	21,–	159,–
Drum Support FA 200-1, hot-dip galvanized	B	118,–	15,–	133,–
Can Shelf Type GR-A, galvanized	B	138,–	39,–	177,–
Can Shelf Type GR-B, galvanized	B	138,–	39,–	177,–
Can Shelf Type GR-C, galvanized	B	138,–	39,–	177,–
2018, hot-dip galvanized	B	365,–	192,–	557,–
Drum Support FA 60-1, hot-dip galvanized	B	109,–	15,–	124,–
Drum Support FA 60-2, hot-dip galvanized	B	118,–	18,–	136,–
Drum Support FA 60-3, hot-dip galvanized	B	138,–	21,–	159,–
Drum Support FA 200-1, hot-dip galvanized	B	118,–	15,–	133,–
Can Shelf Type GR-A, galvanized	B	138,–	39,–	177,–
Can Shelf Type GR-B, galvanized	B	138,–	39,–	177,–
Can Shelf Type GR-C, galvanized	B	138,–	39,–	177,–
2026, painted	B	262,–	192,–	454,–
2026, hot-dip galvanized	B	310,–	192,–	502,–

Prices in EUR, valid EXW DE-46354 Südlohn, DE-38820 Halberstadt, unpacked
Freight charges valid CPT Great Britain, islands & the following post code areas excluded: IC, ZE

BAUER GmbH
Eichendorffstr. 62
46354 Südlohn, Germany

Tel. +49 2862 70 90
info@bauer-suedlohn.com
www.bauer-suedlohn.com

Geschäftsführer
Patrick Bauer, Pascal Bauer
Amtsgericht Coesfeld HRB 5259

TÜVNORD
TÜV NORD CERT GmbH
DIN EN ISO 9001
tuev-nord.de

Price List 0726 en-GB
Environment / Storage

Sump Trays Type SERIES 2000	Category	Price	Freight charges	Price including freight charges
2028, painted	B	366,–	192,–	558,–
Drum Support FA 60-1, hot-dip galvanized	B	109,–	15,–	124,–
Drum Support FA 60-2, hot-dip galvanized	B	118,–	18,–	136,–
Drum Support FA 60-3, hot-dip galvanized	B	138,–	21,–	159,–
Drum Support FA 200-1, hot-dip galvanized	B	118,–	15,–	133,–
Drum Support FA 200-2, hot-dip galvanized	B	138,–	22,–	160,–
Can Shelf Type GR-A, galvanized	B	138,–	39,–	177,–
Can Shelf Type GR-B, galvanized	B	138,–	39,–	177,–
Can Shelf Type GR-C, galvanized	B	138,–	39,–	177,–
2028, hot-dip galvanized	B	412,–	192,–	604,–
Drum Support FA 60-1, hot-dip galvanized	B	109,–	15,–	124,–
Drum Support FA 60-2, hot-dip galvanized	B	118,–	18,–	136,–
Drum Support FA 60-3, hot-dip galvanized	B	138,–	21,–	159,–
Drum Support FA 200-1, hot-dip galvanized	B	118,–	15,–	133,–
Drum Support FA 200-2, hot-dip galvanized	B	138,–	22,–	160,–
Can Shelf Type GR-A, galvanized	B	138,–	39,–	177,–
Can Shelf Type GR-B, galvanized	B	138,–	39,–	177,–
Can Shelf Type GR-C, galvanized	B	138,–	39,–	177,–
2030, painted	B	275,–	192,–	467,–
2030, hot-dip galvanized	B	321,–	192,–	513,–
2032, painted	B	378,–	192,–	570,–
Drum Support FA 60-1, hot-dip galvanized	B	109,–	15,–	124,–
Drum Support FA 60-2, hot-dip galvanized	B	118,–	18,–	136,–
Drum Support FA 60-3, hot-dip galvanized	B	138,–	21,–	159,–
Drum Support FA 200-1, hot-dip galvanized	B	118,–	15,–	133,–
Drum Support FA 200-2, hot-dip galvanized	B	138,–	22,–	160,–
Can Shelf Type GR-A, galvanized	B	138,–	39,–	177,–
Can Shelf Type GR-B, galvanized	B	138,–	39,–	177,–
Can Shelf Type GR-C, galvanized	B	138,–	39,–	177,–
2032, hot-dip galvanized	B	426,–	192,–	618,–
Drum Support FA 60-1, hot-dip galvanized	B	109,–	15,–	124,–
Drum Support FA 60-2, hot-dip galvanized	B	118,–	18,–	136,–
Drum Support FA 60-3, hot-dip galvanized	B	138,–	21,–	159,–
Drum Support FA 200-1, hot-dip galvanized	B	118,–	15,–	133,–
Drum Support FA 200-2, hot-dip galvanized	B	138,–	22,–	160,–
Can Shelf Type GR-A, galvanized	B	138,–	39,–	177,–
Can Shelf Type GR-B, galvanized	B	138,–	39,–	177,–
Can Shelf Type GR-C, galvanized	B	138,–	39,–	177,–
2040, painted	B	351,–	192,–	543,–
2040, hot-dip galvanized	B	426,–	192,–	618,–
2042, painted	B	455,–	274,–	729,–
Drum Support FA 60-1, hot-dip galvanized	B	109,–	15,–	124,–
Drum Support FA 60-2, hot-dip galvanized	B	118,–	18,–	136,–
Drum Support FA 60-3, hot-dip galvanized	B	138,–	21,–	159,–
Can Shelf Type GR-A, galvanized	B	138,–	39,–	177,–
Can Shelf Type GR-B, galvanized	B	138,–	39,–	177,–

Prices in EUR, valid EXW DE-46354 Südlohn, DE-38820 Halberstadt, unpacked
Freight charges valid CPT Great Britain, islands & the following post code areas excluded: IC, ZE

BAUER GmbH
Eichendorffstr. 62
46354 Südlohn, Germany

Tel. +49 2862 70 90
info@bauer-suedlohn.com
www.bauer-suedlohn.com

Geschäftsführer
Patrick Bauer, Pascal Bauer
Amtsgericht Coesfeld HRB 5259

TÜVNORD
TÜV NORD CERT GmbH
DIN EN ISO 9001
tuev-nord.de

Price List 0726 en-GB
Environment / Storage

Sump Trays Type SERIES 2000	Category	Price	Freight charges	Price including freight charges
Can Shelf Type GR-C, galvanized	B	138,–	39,–	177,–
2042, hot-dip galvanized	B	529,–	274,–	803,–
Drum Support FA 60-1, hot-dip galvanized	B	109,–	15,–	124,–
Drum Support FA 60-2, hot-dip galvanized	B	118,–	18,–	136,–
Drum Support FA 60-3, hot-dip galvanized	B	138,–	21,–	159,–
Can Shelf Type GR-A, galvanized	B	138,–	39,–	177,–
Can Shelf Type GR-B, galvanized	B	138,–	39,–	177,–
Can Shelf Type GR-C, galvanized	B	138,–	39,–	177,–
2048, painted	B	271,–	192,–	463,–
2048, hot-dip galvanized	B	316,–	192,–	508,–
2050, painted	B	369,–	192,–	561,–
Drum Support FA 60-1, hot-dip galvanized	B	109,–	15,–	124,–
Drum Support FA 60-2, hot-dip galvanized	B	118,–	18,–	136,–
Drum Support FA 60-3, hot-dip galvanized	B	138,–	21,–	159,–
Can Shelf Type GR-A, galvanized	B	138,–	39,–	177,–
Can Shelf Type GR-B, galvanized	B	138,–	39,–	177,–
Can Shelf Type GR-C, galvanized	B	138,–	39,–	177,–
2050, hot-dip galvanized	B	414,–	192,–	606,–
Drum Support FA 60-1, hot-dip galvanized	B	109,–	15,–	124,–
Drum Support FA 60-2, hot-dip galvanized	B	118,–	18,–	136,–
Drum Support FA 60-3, hot-dip galvanized	B	138,–	21,–	159,–
Can Shelf Type GR-A, galvanized	B	138,–	39,–	177,–
Can Shelf Type GR-B, galvanized	B	138,–	39,–	177,–
Can Shelf Type GR-C, galvanized	B	138,–	39,–	177,–

Sump Trays Type SERIES 2000/SW	Category	Price	Freight charges	Price including freight charges
2002/SW, painted	B	427,–	192,–	619,–
2002/SW, hot-dip galvanized	B	464,–	192,–	656,–
2018/SW, painted	B	468,–	274,–	742,–
Drum Support FA 60-1, hot-dip galvanized	B	109,–	15,–	124,–
Drum Support FA 60-2, hot-dip galvanized	B	118,–	18,–	136,–
Drum Support FA 60-3, hot-dip galvanized	B	138,–	21,–	159,–
Drum Support FA 200-1, hot-dip galvanized	B	118,–	15,–	133,–
Can Shelf Type GR-A, galvanized	B	138,–	39,–	177,–
Can Shelf Type GR-B, galvanized	B	138,–	39,–	177,–
Can Shelf Type GR-C, galvanized	B	138,–	39,–	177,–
2018/SW, hot-dip galvanized	B	517,–	274,–	791,–
Drum Support FA 60-1, hot-dip galvanized	B	109,–	15,–	124,–
Drum Support FA 60-2, hot-dip galvanized	B	118,–	18,–	136,–
Drum Support FA 60-3, hot-dip galvanized	B	138,–	21,–	159,–
Drum Support FA 200-1, hot-dip galvanized	B	118,–	15,–	133,–
Can Shelf Type GR-A, galvanized	B	138,–	39,–	177,–
Can Shelf Type GR-B, galvanized	B	138,–	39,–	177,–
Can Shelf Type GR-C, galvanized	B	138,–	39,–	177,–
2032/SW, painted	B	552,–	274,–	826,–
Drum Support FA 60-1, hot-dip galvanized	B	109,–	15,–	124,–

Prices in EUR, valid EXW DE-46354 Südlohn, DE-38820 Halberstadt, unpacked
Freight charges valid CPT Great Britain, islands & the following post code areas excluded: IC, ZE

BAUER GmbH
Eichendorffstr. 62
46354 Südlohn, Germany

Tel. +49 2862 70 90
info@bauer-suedlohn.com
www.bauer-suedlohn.com

Geschäftsführer
Patrick Bauer, Pascal Bauer
Amtsgericht Coesfeld HRB 5259

TÜVNORD
TÜV NORD CERT GmbH
DIN EN ISO 9001
tuev-nord.de

Price List 0726 en-GB
Environment / Storage

Sump Trays Type SERIES 2000/SW	Category	Price	Freight charges	Price including freight charges
Drum Support FA 60-2, hot-dip galvanized	B	118,–	18,–	136,–
Drum Support FA 60-3, hot-dip galvanized	B	138,–	21,–	159,–
Drum Support FA 200-1, hot-dip galvanized	B	118,–	15,–	133,–
Drum Support FA 200-2, hot-dip galvanized	B	138,–	22,–	160,–
Can Shelf Type GR-A, galvanized	B	138,–	39,–	177,–
Can Shelf Type GR-B, galvanized	B	138,–	39,–	177,–
Can Shelf Type GR-C, galvanized	B	138,–	39,–	177,–
2032/SW, hot-dip galvanized	B	600,–	274,–	874,–
Drum Support FA 60-1, hot-dip galvanized	B	109,–	15,–	124,–
Drum Support FA 60-2, hot-dip galvanized	B	118,–	18,–	136,–
Drum Support FA 60-3, hot-dip galvanized	B	138,–	21,–	159,–
Drum Support FA 200-1, hot-dip galvanized	B	118,–	15,–	133,–
Drum Support FA 200-2, hot-dip galvanized	B	138,–	22,–	160,–
Can Shelf Type GR-A, galvanized	B	138,–	39,–	177,–
Can Shelf Type GR-B, galvanized	B	138,–	39,–	177,–
Can Shelf Type GR-C, galvanized	B	138,–	39,–	177,–
2042/SW, painted	B	685,–	327,–	1012,–
Drum Support FA 60-1, hot-dip galvanized	B	109,–	15,–	124,–
Drum Support FA 60-2, hot-dip galvanized	B	118,–	18,–	136,–
Drum Support FA 60-3, hot-dip galvanized	B	138,–	21,–	159,–
Can Shelf Type GR-A, galvanized	B	138,–	39,–	177,–
Can Shelf Type GR-B, galvanized	B	138,–	39,–	177,–
Can Shelf Type GR-C, galvanized	B	138,–	39,–	177,–
2042/SW, hot-dip galvanized	B	760,–	327,–	1087,–
Drum Support FA 60-1, hot-dip galvanized	B	109,–	15,–	124,–
Drum Support FA 60-2, hot-dip galvanized	B	118,–	18,–	136,–
Drum Support FA 60-3, hot-dip galvanized	B	138,–	21,–	159,–
Can Shelf Type GR-A, galvanized	B	138,–	39,–	177,–
Can Shelf Type GR-B, galvanized	B	138,–	39,–	177,–
Can Shelf Type GR-C, galvanized	B	138,–	39,–	177,–

Mobile Sump Trays Type SERIES 2000	Category	Price	Freight charges	Price including freight charges
2004, painted	B	590,–	192,–	782,–
Fixture and Tension Belt for 1 x 200 Litre Drum	B	48,–	9,–	57,–
2004, hot-dip galvanized	B	657,–	192,–	849,–
Fixture and Tension Belt for 1 x 200 Litre Drum	B	48,–	9,–	57,–
2020, painted	B	656,–	192,–	848,–
Fixture and Tension Belt for 2 x 200 Litre Drums	B	48,–	9,–	57,–
2020, hot-dip galvanized	B	717,–	192,–	909,–
Fixture and Tension Belt for 2 x 200 Litre Drums	B	48,–	9,–	57,–
2050 SR, painted	B	709,–	192,–	901,–
Fixture and Tension Belt for 3 x 200 Litre Drums	B	48,–	9,–	57,–
2050 SR, hot-dip galvanized	B	766,–	274,–	1040,–
Fixture and Tension Belt for 3 x 200 Litre Drums	B	48,–	9,–	57,–

Prices in EUR, valid EXW DE-46354 Südlohn, DE-38820 Halberstadt, unpacked
Freight charges valid CPT Great Britain, islands & the following post code areas excluded: IC, ZE

BAUER GmbH
Eichendorffstr. 62
46354 Südlohn, Germany

Tel. +49 2862 70 90
info@bauer-suedlohn.com
www.bauer-suedlohn.com

Geschäftsführer
Patrick Bauer, Pascal Bauer
Amtsgericht Coesfeld HRB 5259

TÜVNORD
TÜV NORD CERT GmbH
DIN EN ISO 9001
tuev-nord.de

Price List 0726 en-GB
Environment / Storage

Drum Shelves with Sump Trays Type SERIES 3000	Category	Price	Freight charges	Price including freight charges
3000, hot-dip galvanized	B	1091,–	274,–	1365,–
Retainer Bar	B	48,–	12,–	60,–
Rotating Support RA 200, hot-dip galvanized	B	97,–	10,–	107,–
Can Stand Type GS, hot-dip galvanized	B	65,–	18,–	83,–
Crash Guard	B	75,–	9,–	84,–
3001, hot-dip galvanized	B	919,–	274,–	1193,–
Retainer Bar	B	48,–	12,–	60,–
Rotating Support RA 200, hot-dip galvanized	B	97,–	10,–	107,–
Can Stand Type GS, hot-dip galvanized	B	65,–	18,–	83,–
Crash Guard	B	75,–	9,–	84,–
3002, hot-dip galvanized	B	1299,–	327,–	1626,–
Retainer Bar	B	48,–	12,–	60,–
Rotating Support RA 200, hot-dip galvanized	B	97,–	10,–	107,–
Can Stand Type GS, hot-dip galvanized	B	65,–	18,–	83,–
Crash Guard	B	75,–	9,–	84,–
3003, hot-dip galvanized	B	1101,–	327,–	1428,–
Retainer Bar	B	48,–	12,–	60,–
Rotating Support RA 200, hot-dip galvanized	B	97,–	10,–	107,–
Can Stand Type GS, hot-dip galvanized	B	65,–	18,–	83,–
Crash Guard	B	75,–	9,–	84,–
3004, hot-dip galvanized	B	1344,–	274,–	1618,–
Retainer Bar	B	48,–	12,–	60,–
Rotating Support RA 60, hot-dip galvanized	B	97,–	9,–	106,–
Can Stand Type GS, hot-dip galvanized	B	65,–	18,–	83,–
Crash Guard	B	75,–	9,–	84,–
3005, hot-dip galvanized	B	1216,–	274,–	1490,–
Retainer Bar	B	48,–	12,–	60,–
Rotating Support RA 60, hot-dip galvanized	B	97,–	9,–	106,–
Can Stand Type GS, hot-dip galvanized	B	65,–	18,–	83,–
Crash Guard	B	75,–	9,–	84,–
3006, hot-dip galvanized	B	1697,–	436,–	2133,–
Retainer Bar	B	48,–	12,–	60,–
Rotating Support RA 60, hot-dip galvanized	B	97,–	9,–	106,–
Can Stand Type GS, hot-dip galvanized	B	65,–	18,–	83,–
Crash Guard	B	75,–	9,–	84,–
3007, hot-dip galvanized	B	1449,–	327,–	1776,–
Retainer Bar	B	48,–	12,–	60,–
Rotating Support RA 60, hot-dip galvanized	B	97,–	9,–	106,–
Can Stand Type GS, hot-dip galvanized	B	65,–	18,–	83,–
Crash Guard	B	75,–	9,–	84,–
3010, hot-dip galvanized	B	1288,–	327,–	1615,–
Retainer Bar	B	48,–	12,–	60,–
Rotating Support RA 200, hot-dip galvanized	B	97,–	10,–	107,–
Can Stand Type GS, hot-dip galvanized	B	65,–	18,–	83,–
Crash Guard	B	75,–	9,–	84,–
3011, hot-dip galvanized	B	1071,–	327,–	1398,–

Prices in EUR, valid EXW DE-46354 Südlohn, DE-38820 Halberstadt, unpacked
Freight charges valid CPT Great Britain, islands & the following post code areas excluded: IC, ZE

BAUER GmbH
Eichendorffstr. 62
46354 Südlohn, Germany

Tel. +49 2862 70 90
info@bauer-suedlohn.com
www.bauer-suedlohn.com

Geschäftsführer
Patrick Bauer, Pascal Bauer
Amtsgericht Coesfeld HRB 5259

TÜVNORD
TÜV NORD CERT GmbH
DIN EN ISO 9001
tuev-nord.de

Price List 0726 en-GB
Environment / Storage

Drum Shelves with Sump Trays Type SERIES 3000	Category	Price	Freight charges	Price including freight charges
Retainer Bar	B	48,–	12,–	60,–
Rotating Support RA 200, hot-dip galvanized	B	97,–	10,–	107,–
Can Stand Type GS, hot-dip galvanized	B	65,–	18,–	83,–
Crash Guard	B	75,–	9,–	84,–

Small Can Shelves with Sumps Type SERIES 3000	Category	Price	Freight charges	Price including freight charges
3017-4E, galvanized	B	478,–	192,–	670,–
3018-4E, galvanized	B	397,–	192,–	589,–
3019-4E, galvanized	B	576,–	274,–	850,–
3020-4E, galvanized	B	493,–	274,–	767,–
3021-4E, galvanized	B	719,–	274,–	993,–
3022-4E, galvanized	B	626,–	192,–	818,–
3023-4E, galvanized	B	1162,–	327,–	1489,–
3024-4E, galvanized	B	968,–	327,–	1295,–

Shelves Type AG	Category	Price	Freight charges	Price including freight charges
AG 60-1, hot-dip galvanized	B	112,–	12,–	124,–
AG 60-2, hot-dip galvanized	B	117,–	14,–	131,–
AG 60-3, hot-dip galvanized	B	126,–	15,–	141,–

Sump Tray Type AM	Category	Price	Freight charges	Price including freight charges
AM-1, painted	B	335,–	192,–	527,–
AM-1, hot-dip galvanized	B	379,–	192,–	571,–
AM-2, painted	B	370,–	192,–	562,–
Drum Support FA 60-1, hot-dip galvanized	B	109,–	15,–	124,–
Drum Support FA 60-2, hot-dip galvanized	B	118,–	18,–	136,–
Drum Support FA 60-3, hot-dip galvanized	B	138,–	21,–	159,–
Drum Support FA 200-1, hot-dip galvanized	B	118,–	15,–	133,–
Can Shelf Type GR-A, galvanized	B	138,–	39,–	177,–
Can Shelf Type GR-B, galvanized	B	138,–	39,–	177,–
Can Shelf Type GR-C, galvanized	B	138,–	39,–	177,–
AM-2, hot-dip galvanized	B	427,–	192,–	619,–
Drum Support FA 60-1, hot-dip galvanized	B	109,–	15,–	124,–
Drum Support FA 60-2, hot-dip galvanized	B	118,–	18,–	136,–
Drum Support FA 60-3, hot-dip galvanized	B	138,–	21,–	159,–
Drum Support FA 200-1, hot-dip galvanized	B	118,–	15,–	133,–
Can Shelf Type GR-A, galvanized	B	138,–	39,–	177,–
Can Shelf Type GR-B, galvanized	B	138,–	39,–	177,–
Can Shelf Type GR-C, galvanized	B	138,–	39,–	177,–
AM-4/A, painted	B	443,–	192,–	635,–
Drum Support FA 60-1, hot-dip galvanized	B	109,–	15,–	124,–
Drum Support FA 60-2, hot-dip galvanized	B	118,–	18,–	136,–
Drum Support FA 60-3, hot-dip galvanized	B	138,–	21,–	159,–
Drum Support FA 200-1, hot-dip galvanized	B	118,–	15,–	133,–
Drum Support FA 200-2, hot-dip galvanized	B	138,–	22,–	160,–

Prices in EUR, valid EXW DE-46354 Südlohn, DE-38820 Halberstadt, unpacked
Freight charges valid CPT Great Britain, islands & the following post code areas excluded: IC, ZE

BAUER GmbH
Eichendorffstr. 62
46354 Südlohn, Germany

Tel. +49 2862 70 90
info@bauer-suedlohn.com
www.bauer-suedlohn.com

Geschäftsführer
Patrick Bauer, Pascal Bauer
Amtsgericht Coesfeld HRB 5259

TÜVNORD
TÜV NORD CERT GmbH
DIN EN ISO 9001
tuev-nord.de

Price List 0726 en-GB
Environment / Storage

Sump Tray Type AM	Category	Price	Freight charges	Price including freight charges
Can Shelf Type GR-A, galvanized	B	138,–	39,–	177,–
Can Shelf Type GR-B, galvanized	B	138,–	39,–	177,–
Can Shelf Type GR-C, galvanized	B	138,–	39,–	177,–
AM-4/A, hot-dip galvanized	B	499,–	274,–	773,–
Drum Support FA 60-1, hot-dip galvanized	B	109,–	15,–	124,–
Drum Support FA 60-2, hot-dip galvanized	B	118,–	18,–	136,–
Drum Support FA 60-3, hot-dip galvanized	B	138,–	21,–	159,–
Drum Support FA 200-1, hot-dip galvanized	B	118,–	15,–	133,–
Drum Support FA 200-2, hot-dip galvanized	B	138,–	22,–	160,–
Can Shelf Type GR-A, galvanized	B	138,–	39,–	177,–
Can Shelf Type GR-B, galvanized	B	138,–	39,–	177,–
Can Shelf Type GR-C, galvanized	B	138,–	39,–	177,–
AM-4/B, painted	B	532,–	274,–	806,–
Drum Support FA 60-1, hot-dip galvanized	B	109,–	15,–	124,–
Drum Support FA 60-2, hot-dip galvanized	B	118,–	18,–	136,–
Drum Support FA 60-3, hot-dip galvanized	B	138,–	21,–	159,–
Can Shelf Type GR-A, galvanized	B	138,–	39,–	177,–
Can Shelf Type GR-B, galvanized	B	138,–	39,–	177,–
Can Shelf Type GR-C, galvanized	B	138,–	39,–	177,–
AM-4/B, hot-dip galvanized	B	624,–	274,–	898,–
Drum Support FA 60-1, hot-dip galvanized	B	109,–	15,–	124,–
Drum Support FA 60-2, hot-dip galvanized	B	118,–	18,–	136,–
Drum Support FA 60-3, hot-dip galvanized	B	138,–	21,–	159,–
Can Shelf Type GR-A, galvanized	B	138,–	39,–	177,–
Can Shelf Type GR-B, galvanized	B	138,–	39,–	177,–
Can Shelf Type GR-C, galvanized	B	138,–	39,–	177,–

Sump Tray Type AO	Category	Price	Freight charges	Price including freight charges
AO-1, painted	B	292,–	192,–	484,–
AO-1, hot-dip galvanized	B	337,–	192,–	529,–
AO-2, painted	B	310,–	192,–	502,–
AO-2, hot-dip galvanized	B	367,–	192,–	559,–
AO-4/A, painted	B	322,–	192,–	514,–
AO-4/A, hot-dip galvanized	B	378,–	192,–	570,–
AO-4/B, painted	B	412,–	192,–	604,–
AO-4/B, hot-dip galvanized	B	500,–	192,–	692,–

Sump Tray Type AW	Category	Price	Freight charges	Price including freight charges
AW 450, painted	B	641,–	274,–	915,–
AW 450, hot-dip galvanized	B	795,–	274,–	1069,–
AW 800, painted	B	667,–	274,–	941,–
AW 800, hot-dip galvanized	B	831,–	274,–	1105,–
AW 1000, painted	B	672,–	274,–	946,–
AW 1000, hot-dip galvanized	B	838,–	274,–	1112,–
AW 1000-2, painted	B	861,–	436,–	1297,–

Prices in EUR, valid EXW DE-46354 Südlohn, DE-38820 Halberstadt, unpacked
Freight charges valid CPT Great Britain, islands & the following post code areas excluded: IC, ZE

BAUER GmbH
Eichendorffstr. 62
46354 Südlohn, Germany

Tel. +49 2862 70 90
info@bauer-suedlohn.com
www.bauer-suedlohn.com

Geschäftsführer
Patrick Bauer, Pascal Bauer
Amtsgericht Coesfeld HRB 5259

TÜVNORD
TÜV NORD CERT GmbH
DIN EN ISO 9001
tuev-nord.de

Price List 0726 en-GB
Environment / Storage

Sump Tray Type AW	Category	Price	Freight charges	Price including freight charges
AW 1000-2, hot-dip galvanized	B	966,–	436,–	1402,–
AW 1000-3, painted	B	1524,–	436,–	1960,–
AW 1000-3, hot-dip galvanized	B	1641,–	512,–	2153,–
AW 1000-10F, painted	B	1032,–	436,–	1468,–
AW 1000-10F, hot-dip galvanized	B	1195,–	436,–	1631,–

Sump Tray Type AW/SW	Category	Price	Freight charges	Price including freight charges
AW 450/SW, painted	B	844,–	274,–	1118,–
AW 450/SW, hot-dip galvanized	B	998,–	383,–	1381,–
AW 800/SW, painted	B	869,–	383,–	1252,–
AW 800/SW, hot-dip galvanized	B	1032,–	383,–	1415,–
AW 1000/SW, painted	B	874,–	383,–	1257,–
AW 1000/SW, hot-dip galvanized	B	1042,–	383,–	1425,–
AW 1000-2/SW, painted	B	1091,–	436,–	1527,–
AW 1000-2/SW, hot-dip galvanized	B	1196,–	512,–	1708,–
AW 1000-3/SW, painted	B	1787,–	on request	on request
AW 1000-3/SW, hot-dip galvanized	B	2121,–	on request	on request
AW 1000-10F/SW, painted	B	1387,–	512,–	1899,–
AW 1000-10F/SW, hot-dip galvanized	B	1548,–	512,–	2060,–

Mobile Sump Tray AW 60-1 SR	Category	Price	Freight charges	Price including freight charges
AW 60-1 SR, painted	B	325,–	192,–	517,–
Fixture and Tension belt for 2 x 60 Litre Drums	B	45,–	8,–	53,–
AW 60-1 SR, hot-dip galvanized	B	345,–	192,–	537,–
Fixture and Tension belt for 2 x 60 Litre Drums	B	45,–	8,–	53,–

Mobile Sump Tray AW 60-1 SRF	Category	Price	Freight charges	Price including freight charges
AW 60-1 SRF, painted	B	429,–	192,–	621,–
AW 60-1 SRF, hot-dip galvanized	B	451,–	192,–	643,–

Sump Tray Type AW 60	Category	Price	Freight charges	Price including freight charges
AW 60-1, painted	B	176,–	74,–	250,–
Grid GR 60-1, hot-dip galvanized	B	23,–	8,–	31,–
Drum Suppport FA 60-A, galvanized	B	25,–	8,–	33,–
Rotating Support RA 60-A, hot-dip galvanized	B	97,–	9,–	106,–
AG 60-1, hot-dip galvanized	B	112,–	12,–	124,–
Canister Stand AB, galvanized	B	19,–	8,–	27,–
Castor Set, polyamide, Load capacity 375 kg / castor set	B	86,–	15,–	101,–
AW 60-1, hot-dip galvanized	B	189,–	74,–	263,–
Grid GR 60-1, hot-dip galvanized	B	23,–	8,–	31,–
Drum Suppport FA 60-A, galvanized	B	25,–	8,–	33,–
Rotating Support RA 60-A, hot-dip galvanized	B	97,–	9,–	106,–
AG 60-1, hot-dip galvanized	B	112,–	12,–	124,–
Canister Stand AB, galvanized	B	19,–	8,–	27,–
Castor Set, polyamide, Load capacity 375 kg / castor set	B	86,–	15,–	101,–

Prices in EUR, valid EXW DE-46354 Südlohn, DE-38820 Halberstadt, unpacked
Freight charges valid CPT Great Britain, islands & the following post code areas excluded: IC, ZE

BAUER GmbH
Eichendorffstr. 62
46354 Südlohn, Germany

Tel. +49 2862 70 90
info@bauer-suedlohn.com
www.bauer-suedlohn.com

Geschäftsführer
Patrick Bauer, Pascal Bauer
Amtsgericht Coesfeld HRB 5259

TÜVNORD
TÜV NORD CERT GmbH
DIN EN ISO 9001
tuev-nord.de

Price List 0726 en-GB
Environment / Storage

Sump Tray Type AW 60	Category	Price	Freight charges	Price including freight charges
AW 60-2, painted	B	177,–	192,–	369,–
Grid GR 60-2, hot-dip galvanized	B	27,–	12,–	39,–
Drum Suppport FA 60-A, galvanized	B	25,–	8,–	33,–
Rotating Support RA 60-A, hot-dip galvanized	B	97,–	9,–	106,–
AG 60-2, hot-dip galvanized	B	117,–	14,–	131,–
Canister Stand AB, galvanized	B	19,–	8,–	27,–
Castor Set, polyamide, Load capacity 375 kg / castor set	B	86,–	15,–	101,–
AW 60-2, hot-dip galvanized	B	195,–	192,–	387,–
Grid GR 60-2, hot-dip galvanized	B	27,–	12,–	39,–
Drum Suppport FA 60-A, galvanized	B	25,–	8,–	33,–
Rotating Support RA 60-A, hot-dip galvanized	B	97,–	9,–	106,–
AG 60-2, hot-dip galvanized	B	117,–	14,–	131,–
Canister Stand AB, galvanized	B	19,–	8,–	27,–
Castor Set, polyamide, Load capacity 375 kg / castor set	B	86,–	15,–	101,–
AW 60-3, painted	B	193,–	192,–	385,–
Grid GR 60-3, hot-dip galvanized	B	40,–	14,–	54,–
Drum Suppport FA 60-A, galvanized	B	25,–	8,–	33,–
Rotating Support RA 60-A, hot-dip galvanized	B	97,–	9,–	106,–
AG 60-3, hot-dip galvanized	B	126,–	15,–	141,–
Canister Stand AB, galvanized	B	19,–	8,–	27,–
Castor Set, polyamide, Load capacity 375 kg / castor set	B	86,–	15,–	101,–
AW 60-3, hot-dip galvanized	B	217,–	192,–	409,–
Grid GR 60-3, hot-dip galvanized	B	40,–	14,–	54,–
Drum Suppport FA 60-A, galvanized	B	25,–	8,–	33,–
Rotating Support RA 60-A, hot-dip galvanized	B	97,–	9,–	106,–
AG 60-3, hot-dip galvanized	B	126,–	15,–	141,–
Canister Stand AB, galvanized	B	19,–	8,–	27,–
Castor Set, polyamide, Load capacity 375 kg / castor set	B	86,–	15,–	101,–

Sump Tray Type AW 60/M	Category	Price	Freight charges	Price including freight charges
AW 60-1/M, painted	B	196,–	192,–	388,–
Drum Suppport FA 60-A, galvanized	B	25,–	8,–	33,–
Rotating Support RA 60-A, hot-dip galvanized	B	97,–	9,–	106,–
AG 60-1, hot-dip galvanized	B	112,–	12,–	124,–
Canister Stand AB, galvanized	B	19,–	8,–	27,–
Castor Set, polyamide, Load capacity 375 kg / castor set	B	86,–	15,–	101,–
AW 60-1/M, hot-dip galvanized	B	211,–	192,–	403,–
Drum Suppport FA 60-A, galvanized	B	25,–	8,–	33,–
Rotating Support RA 60-A, hot-dip galvanized	B	97,–	9,–	106,–
AG 60-1, hot-dip galvanized	B	112,–	12,–	124,–
Canister Stand AB, galvanized	B	19,–	8,–	27,–
Castor Set, polyamide, Load capacity 375 kg / castor set	B	86,–	15,–	101,–
AW 60-2/M, painted	B	203,–	192,–	395,–
Drum Suppport FA 60-A, galvanized	B	25,–	8,–	33,–
Drum Support FA 60-2, hot-dip galvanized	B	118,–	18,–	136,–
Rotating Support RA 60-A, hot-dip galvanized	B	97,–	9,–	106,–

Prices in EUR, valid EXW DE-46354 Südlohn, DE-38820 Halberstadt, unpacked
Freight charges valid CPT Great Britain, islands & the following post code areas excluded: IC, ZE

BAUER GmbH
Eichendorffstr. 62
46354 Südlohn, Germany

Tel. +49 2862 70 90
info@bauer-suedlohn.com
www.bauer-suedlohn.com

Geschäftsführer
Patrick Bauer, Pascal Bauer
Amtsgericht Coesfeld HRB 5259

TÜVNORD
TÜV NORD CERT GmbH
DIN EN ISO 9001
tuev-nord.de

Price List 0726 en-GB
Environment / Storage

Sump Tray Type AW 60/M	Category	Price	Freight charges	Price including freight charges
AG 60-2, hot-dip galvanized	B	117,–	14,–	131,–
Canister Stand AB, galvanized	B	19,–	8,–	27,–
Castor Set, polyamide, Load capacity 375 kg / castor set	B	86,–	15,–	101,–
AW 60-2/M, hot-dip galvanized	B	221,–	192,–	413,–
Drum Suppport FA 60-A, galvanized	B	25,–	8,–	33,–
Drum Support FA 60-2, hot-dip galvanized	B	118,–	18,–	136,–
Rotating Support RA 60-A, hot-dip galvanized	B	97,–	9,–	106,–
AG 60-2, hot-dip galvanized	B	117,–	14,–	131,–
Canister Stand AB, galvanized	B	19,–	8,–	27,–
Castor Set, polyamide, Load capacity 375 kg / castor set	B	86,–	15,–	101,–
AW 60-3/M, painted	B	232,–	192,–	424,–
Drum Suppport FA 60-A, galvanized	B	25,–	8,–	33,–
Drum Support FA 60-2, hot-dip galvanized	B	118,–	18,–	136,–
Drum Support FA 60-3, hot-dip galvanized	B	138,–	21,–	159,–
Rotating Support RA 60-A, hot-dip galvanized	B	97,–	9,–	106,–
AG 60-3, hot-dip galvanized	B	126,–	15,–	141,–
Canister Stand AB, galvanized	B	19,–	8,–	27,–
Castor Set, polyamide, Load capacity 375 kg / castor set	B	86,–	15,–	101,–
AW 60-3/M, hot-dip galvanized	B	254,–	192,–	446,–
Drum Suppport FA 60-A, galvanized	B	25,–	8,–	33,–
Drum Support FA 60-2, hot-dip galvanized	B	118,–	18,–	136,–
Drum Support FA 60-3, hot-dip galvanized	B	138,–	21,–	159,–
Rotating Support RA 60-A, hot-dip galvanized	B	97,–	9,–	106,–
AG 60-3, hot-dip galvanized	B	126,–	15,–	141,–
Canister Stand AB, galvanized	B	19,–	8,–	27,–
Castor Set, polyamide, Load capacity 375 kg / castor set	B	86,–	15,–	101,–

Sump Tray Type AW/PE	Category	Price	Freight charges	Price including freight charges
AW-1/PE, painted	B	658,–	192,–	850,–
AW-1/PE, hot-dip galvanized	B	688,–	192,–	880,–
AW-2/PE, painted	B	721,–	192,–	913,–
Drum Support FA 60-1, hot-dip galvanized	B	109,–	15,–	124,–
Drum Support FA 60-2, hot-dip galvanized	B	118,–	18,–	136,–
Drum Support FA 60-3, hot-dip galvanized	B	138,–	21,–	159,–
Drum Support FA 200-1, hot-dip galvanized	B	118,–	15,–	133,–
Can Shelf Type GR-A, galvanized	B	138,–	39,–	177,–
Can Shelf Type GR-B, galvanized	B	138,–	39,–	177,–
Can Shelf Type GR-C, galvanized	B	138,–	39,–	177,–
AW-2/PE, hot-dip galvanized	B	757,–	192,–	949,–
Drum Support FA 60-1, hot-dip galvanized	B	109,–	15,–	124,–
Drum Support FA 60-2, hot-dip galvanized	B	118,–	18,–	136,–
Drum Support FA 60-3, hot-dip galvanized	B	138,–	21,–	159,–
Drum Support FA 200-1, hot-dip galvanized	B	118,–	15,–	133,–
Can Shelf Type GR-A, galvanized	B	138,–	39,–	177,–
Can Shelf Type GR-B, galvanized	B	138,–	39,–	177,–
Can Shelf Type GR-C, galvanized	B	138,–	39,–	177,–

Prices in EUR, valid EXW DE-46354 Südlohn, DE-38820 Halberstadt, unpacked
Freight charges valid CPT Great Britain, islands & the following post code areas excluded: IC, ZE

BAUER GmbH
Eichendorffstr. 62
46354 Südlohn, Germany

Tel. +49 2862 70 90
info@bauer-suedlohn.com
www.bauer-suedlohn.com

Geschäftsführer
Patrick Bauer, Pascal Bauer
Amtsgericht Coesfeld HRB 5259

TÜVNORD
TÜV NORD CERT GmbH
DIN EN ISO 9001
tuev-nord.de

Price List 0726 en-GB
Environment / Storage

Sump Tray Type AW/PE	Category	Price	Freight charges	Price including freight charges
AW-4/A/PE, painted	B	818,–	274,–	1092,–
Drum Support FA 60-1, hot-dip galvanized	B	109,–	15,–	124,–
Drum Support FA 60-2, hot-dip galvanized	B	118,–	18,–	136,–
Drum Support FA 60-3, hot-dip galvanized	B	138,–	21,–	159,–
Drum Support FA 200-1, hot-dip galvanized	B	118,–	15,–	133,–
Drum Support FA 200-2, hot-dip galvanized	B	138,–	22,–	160,–
Can Shelf Type GR-A, galvanized	B	138,–	39,–	177,–
Can Shelf Type GR-B, galvanized	B	138,–	39,–	177,–
Can Shelf Type GR-C, galvanized	B	138,–	39,–	177,–
AW-4/A/PE, hot-dip galvanized	B	859,–	274,–	1133,–
Drum Support FA 60-1, hot-dip galvanized	B	109,–	15,–	124,–
Drum Support FA 60-2, hot-dip galvanized	B	118,–	18,–	136,–
Drum Support FA 60-3, hot-dip galvanized	B	138,–	21,–	159,–
Drum Support FA 200-1, hot-dip galvanized	B	118,–	15,–	133,–
Drum Support FA 200-2, hot-dip galvanized	B	138,–	22,–	160,–
Can Shelf Type GR-A, galvanized	B	138,–	39,–	177,–
Can Shelf Type GR-B, galvanized	B	138,–	39,–	177,–
Can Shelf Type GR-C, galvanized	B	138,–	39,–	177,–
AW-4/B/PE, painted	B	1021,–	327,–	1348,–
Drum Support FA 60-1, hot-dip galvanized	B	109,–	15,–	124,–
Drum Support FA 60-2, hot-dip galvanized	B	118,–	18,–	136,–
Drum Support FA 60-3, hot-dip galvanized	B	138,–	21,–	159,–
Can Shelf Type GR-A, galvanized	B	138,–	39,–	177,–
Can Shelf Type GR-B, galvanized	B	138,–	39,–	177,–
Can Shelf Type GR-C, galvanized	B	138,–	39,–	177,–
AW-4/B/PE, hot-dip galvanized	B	1096,–	327,–	1423,–
Drum Support FA 60-1, hot-dip galvanized	B	109,–	15,–	124,–
Drum Support FA 60-2, hot-dip galvanized	B	118,–	18,–	136,–
Drum Support FA 60-3, hot-dip galvanized	B	138,–	21,–	159,–
Can Shelf Type GR-A, galvanized	B	138,–	39,–	177,–
Can Shelf Type GR-B, galvanized	B	138,–	39,–	177,–
Can Shelf Type GR-C, galvanized	B	138,–	39,–	177,–
AW 1000/PE, painted	B	1386,–	383,–	1769,–
AW 1000/PE, hot-dip galvanized	B	1575,–	383,–	1958,–
AW 1000-2/PE, painted	B	1700,–	436,–	2136,–
AW 1000-2/PE, hot-dip galvanized	B	1818,–	436,–	2254,–

Sump Trays AW 8-12	Category	Price	Freight charges	Price including freight charges
AW-8, painted	B	732,–	327,–	1059,–
AW-8, hot-dip galvanized	B	815,–	436,–	1251,–
AW-10, painted	B	904,–	436,–	1340,–
AW-10, hot-dip galvanized	B	1239,–	436,–	1675,–
AW-12, painted	B	1035,–	436,–	1471,–
AW-12, hot-dip galvanized	B	1431,–	436,–	1867,–

Prices in EUR, valid EXW DE-46354 Südlohn, DE-38820 Halberstadt, unpacked
Freight charges valid CPT Great Britain, islands & the following post code areas excluded: IC, ZE

BAUER GmbH
Eichendorffstr. 62
46354 Südlohn, Germany

Tel. +49 2862 70 90
info@bauer-suedlohn.com
www.bauer-suedlohn.com

Geschäftsführer
Patrick Bauer, Pascal Bauer
Amtsgericht Coesfeld HRB 5259

TÜVNORD
TÜV NORD CERT GmbH
DIN EN ISO 9001
tuev-nord.de

Price List 0726 en-GB
Environment / Storage

Sump Tray Type AWA	Category	Price	Freight charges	Price including freight charges
AWA 1000, painted	B	864,–	274,–	1138,–
AWA 1000, hot-dip galvanized	B	1045,–	383,–	1428,–
AWA 1000-2, painted	B	1239,–	436,–	1675,–
AWA 1000-2, hot-dip galvanized	B	1374,–	436,–	1810,–
AWA 1000-3, painted	B	2254,–	512,–	2766,–
AWA 1000-3, hot-dip galvanized	B	2385,–	677,–	3062,–
AWA 21, painted	B	1048,–	436,–	1484,–
AWA 21, hot-dip galvanized	B	1182,–	436,–	1618,–
AWA 31, painted	B	1956,–	512,–	2468,–
AWA 31, hot-dip galvanized	B	2077,–	512,–	2589,–
AWA 32, painted	B	2127,–	512,–	2639,–
AWA 32, hot-dip galvanized	B	2250,–	512,–	2762,–

Sump Tray Type AWA/SW	Category	Price	Freight charges	Price including freight charges
AWA 1000/SW, painted	B	1064,–	383,–	1447,–
AWA 1000/SW, hot-dip galvanized	B	1246,–	383,–	1629,–
AWA 1000-2/SW, painted	B	1472,–	512,–	1984,–
AWA 1000-2/SW, hot-dip galvanized	B	1605,–	512,–	2117,–
AWA 1000-3/SW, painted	B	2518,–	on request	on request
AWA 1000-3/SW, hot-dip galvanized	B	2648,–	on request	on request
AWA 21/SW, painted	B	1278,–	512,–	1790,–
AWA 21/SW, hot-dip galvanized	B	1413,–	512,–	1925,–
AWA 31/SW, painted	B	2217,–	on request	on request
AWA 31/SW, hot-dip galvanized	B	2339,–	on request	on request
AWA 32/SW, painted	B	2388,–	on request	on request
AWA 32/SW, hot-dip galvanized	B	2512,–	on request	on request

Sump Tray Type AW-F	Category	Price	Freight charges	Price including freight charges
AW-F 1, painted	B	657,–	192,–	849,–
Fixture and Tension Belt for 1 x 200 Litre Drum	B	48,–	9,–	57,–
AW-F 1, hot-dip galvanized	B	780,–	192,–	972,–
Fixture and Tension Belt for 1 x 200 Litre Drum	B	48,–	9,–	57,–
AW-F 2, painted	B	688,–	192,–	880,–
Fixture and Tension Belt for 2 x 200 Litre Drums	B	48,–	9,–	57,–
AW-F 2, hot-dip galvanized	B	842,–	192,–	1034,–
Fixture and Tension Belt for 2 x 200 Litre Drums	B	48,–	9,–	57,–

Ground Protection Spill Tray Type BSW	Category	Price	Freight charges	Price including freight charges
BSW 21, galvanized	B	449,–	274,–	723,–
Access Ramp AR 21, galvanized	B	166,–	22,–	188,–
Access Corner Piece AE 24, galvanized	B	130,–	10,–	140,–
Cross-Shaped Connector KV 24, galvanized	B	20,–	8,–	28,–
Tray Connecting Strip WV 21, galvanized	B	22,–	8,–	30,–
BSW 22, galvanized	B	590,–	274,–	864,–
Access Ramp AR 21, galvanized	B	166,–	22,–	188,–

Prices in EUR, valid EXW DE-46354 Südlohn, DE-38820 Halberstadt, unpacked
Freight charges valid CPT Great Britain, islands & the following post code areas excluded: IC, ZE

BAUER GmbH
Eichendorffstr. 62
46354 Südlohn, Germany

Tel. +49 2862 70 90
info@bauer-suedlohn.com
www.bauer-suedlohn.com

Geschäftsführer
Patrick Bauer, Pascal Bauer
Amtsgericht Coesfeld HRB 5259

TÜVNORD
TÜV NORD CERT GmbH
DIN EN ISO 9001
tuev-nord.de

Price List 0726 en-GB
Environment / Storage

Ground Protection Spill Tray Type BSW	Category	Price	Freight charges	Price including freight charges
Access Ramp AR 22, galvanized	B	211,–	32,–	243,–
Access Corner Piece AE 24, galvanized	B	130,–	10,–	140,–
Cross-Shaped Connector KV 24, galvanized	B	20,–	8,–	28,–
Tray Connecting Strip WV 21, galvanized	B	22,–	8,–	30,–
Tray Connecting Strip WV 22, galvanized	B	24,–	8,–	32,–
BSW 23, galvanized	B	764,–	240,–	1004,–
Access Ramp AR 23, galvanized	B	300,–	244,–	544,–
Access Ramp AR 21, galvanized	B	166,–	22,–	188,–
Access Corner Piece AE 24, galvanized	B	130,–	10,–	140,–
Cross-Shaped Connector KV 24, galvanized	B	20,–	8,–	28,–
Tray Connecting Strip WV 21, galvanized	B	22,–	8,–	30,–
Tray Connecting Strip WV 23, galvanized	B	37,–	9,–	46,–
BSW 24, galvanized	B	1341,–	303,–	1644,–
Access Ramp AR 23, galvanized	B	300,–	244,–	544,–
Access Ramp AR 22, galvanized	B	211,–	32,–	243,–
Access Corner Piece AE 24, galvanized	B	130,–	10,–	140,–
Cross-Shaped Connector KV 24, galvanized	B	20,–	8,–	28,–
Tray Connecting Strip WV 22, galvanized	B	24,–	8,–	32,–
Tray Connecting Strip WV 23, galvanized	B	37,–	9,–	46,–
BSW 121, galvanized	B	199,–	74,–	273,–
Access Ramp AR 121, galvanized	B	163,–	22,–	185,–
Cross-Shaped Connector KV 24, galvanized	B	20,–	8,–	28,–
Tray Connecting Strip WV 121, galvanized	B	21,–	9,–	30,–
BSW 122, galvanized	B	243,–	192,–	435,–
Access Ramp AR 121, galvanized	B	163,–	22,–	185,–
Access Ramp AR 122, galvanized	B	275,–	36,–	311,–
Access Corner Piece AE 124, galvanized	B	261,–	21,–	282,–
Cross-Shaped Connector KV 24, galvanized	B	20,–	8,–	28,–
Tray Connecting Strip WV 121, galvanized	B	21,–	9,–	30,–
Tray Connecting Strip WV 122, galvanized	B	26,–	9,–	35,–
BSW 123, galvanized	B	339,–	192,–	531,–
Access Ramp AR 122, galvanized	B	275,–	36,–	311,–
Access Corner Piece AE 124, galvanized	B	261,–	21,–	282,–
Cross-Shaped Connector KV 24, galvanized	B	20,–	8,–	28,–
Tray Connecting Strip WV 122, galvanized	B	26,–	9,–	35,–
BSW 124, galvanized	B	553,–	274,–	827,–
Access Ramp AR 122, galvanized	B	275,–	36,–	311,–
Access Ramp AR 123, galvanized	B	338,–	239,–	577,–
Access Corner Piece AE 124, galvanized	B	261,–	21,–	282,–
Cross-Shaped Connector KV 24, galvanized	B	20,–	8,–	28,–
Tray Connecting Strip WV 122, galvanized	B	26,–	9,–	35,–
Tray Connecting Strip WV 123, galvanized	B	36,–	9,–	45,–
BSW 125, galvanized	B	426,–	327,–	753,–
Access Ramp AR 121, galvanized	B	163,–	22,–	185,–
Access Ramp AR 124, galvanized	B	392,–	327,–	719,–
Access Corner Piece AE 124, galvanized	B	261,–	21,–	282,–

Prices in EUR, valid EXW DE-46354 Südlohn, DE-38820 Halberstadt, unpacked
Freight charges valid CPT Great Britain, islands & the following post code areas excluded: IC, ZE

BAUER GmbH
Eichendorffstr. 62
46354 Südlohn, Germany

Tel. +49 2862 70 90
info@bauer-suedlohn.com
www.bauer-suedlohn.com

Geschäftsführer
Patrick Bauer, Pascal Bauer
Amtsgericht Coesfeld HRB 5259

TÜVNORD
TÜV NORD CERT GmbH
DIN EN ISO 9001
tuev-nord.de

Price List 0726 en-GB
Environment / Storage

Ground Protection Spill Tray Type BSW	Category	Price	Freight charges	Price including freight charges
Cross-Shaped Connector KV 24, galvanized	B	20,–	8,–	28,–
Tray Connecting Strip WV 121, galvanized	B	21,–	9,–	30,–
Tray Connecting Strip WV 124, galvanized	B	49,–	9,–	58,–
BSW 126, galvanized	B	668,–	436,–	1104,–
Access Ramp AR 122, galvanized	B	275,–	36,–	311,–
Access Ramp AR 124, galvanized	B	392,–	327,–	719,–
Access Corner Piece AE 124, galvanized	B	261,–	21,–	282,–
Cross-Shaped Connector KV 24, galvanized	B	20,–	8,–	28,–
Tray Connecting Strip WV 122, galvanized	B	26,–	9,–	35,–
Tray Connecting Strip WV 124, galvanized	B	49,–	9,–	58,–

Polyethylene Bunded Spill Flooring Type BWP-PE	Category	Price	Freight charges	Price including freight charges
BWP-PE 150, made of robust polyethylene	B	316,–	192,–	508,–
Ramp Type BWR, robust polyethylene, black	B	222,–	12,–	234,–
Joining Element BWV 2, stainless steel 1.4301	B	29,–	9,–	38,–
BWP-PE 300, made of robust polyethylene	B	641,–	192,–	833,–
Ramp Type BWR, robust polyethylene, black	B	222,–	12,–	234,–
Joining Element BWV 4, stainless steel 1.4301	B	38,–	10,–	48,–

Polyethylene Bunded Spill Flooring Type BWPS-PE	Category	Price	Freight charges	Price including freight charges
BWPS-PE 300, made of robust polyethylene	B	786,–	244,–	1030,–
Ramp Type BWR, robust polyethylene, black	B	222,–	12,–	234,–
Joining Element BWV 2, stainless steel 1.4301	B	29,–	9,–	38,–

Shelf Container Type CEH	Category	Price	Freight charges	Price including freight charges
CEH 29-2, painted	C	9142,–	on request	on request
CEH 29-2 IBC, painted	C	10076,–	on request	on request
CEH 36-2 IBC, painted	C	11727,–	on request	on request
CEH 38-2, painted	C	11719,–	on request	on request
CEH 59-2, painted	C	17352,–	on request	on request
CEH 59-2 IBC, painted	C	18629,–	on request	on request
CEH 75-2 IBC, painted	C	22081,–	on request	on request
CEH 81-2, painted	C	22524,–	on request	on request

Shelf Container Type CEN	Category	Price	Freight charges	Price including freight charges
CEN 29-2, painted	C	7714,–	on request	on request
Potential equalisation	C	184,–	0,–	184,–
CEN 29-2 IBC, painted	C	8421,–	on request	on request
Potential equalisation	C	184,–	0,–	184,–
CEN 29-2b, painted	C	13445,–	on request	on request
Potential equalisation	C	366,–	0,–	366,–
CEN 29-2b IBC, painted	C	14379,–	on request	on request
Potential equalisation	C	366,–	0,–	366,–
CEN 29-3, painted	C	12140,–	on request	on request
Potential equalisation	C	274,–	0,–	274,–

Prices in EUR, valid EXW DE-46354 Südlohn, DE-38820 Halberstadt, unpacked
Freight charges valid CPT Great Britain, islands & the following post code areas excluded: IC, ZE

BAUER GmbH
Eichendorffstr. 62
46354 Südlohn, Germany

Tel. +49 2862 70 90
info@bauer-suedlohn.com
www.bauer-suedlohn.com

Geschäftsführer
Patrick Bauer, Pascal Bauer
Amtsgericht Coesfeld HRB 5259

TÜVNORD
TÜV NORD CERT GmbH
DIN EN ISO 9001
tuev-nord.de

Price List 0726 en-GB
Environment / Storage

Shelf Container Type CEN	Category	Price	Freight charges	Price including freight charges
CEN 29-3 IBC, painted	C	12917,–	on request	on request
Potential equalisation	C	274,–	0,–	274,–
CEN 29-3b, painted	C	19757,–	on request	on request
Potential equalisation	C	546,–	0,–	546,–
CEN 29-3b IBC, painted	C	20862,–	on request	on request
Potential equalisation	C	546,–	0,–	546,–
CEN 33-2 IBC, painted	C	9393,–	on request	on request
Potential equalisation	C	184,–	0,–	184,–
CEN 33-2b IBC, painted	C	15740,–	on request	on request
Potential equalisation	C	366,–	0,–	366,–
CEN 33-3 IBC, painted	C	13849,–	on request	on request
Potential equalisation	C	274,–	0,–	274,–
CEN 33-3b IBC, painted	C	22018,–	on request	on request
Potential equalisation	C	546,–	0,–	546,–
CEN 36-2, painted	C	9470,–	on request	on request
Potential equalisation	C	184,–	0,–	184,–
CEN 36-2b, painted	C	16110,–	on request	on request
Potential equalisation	C	366,–	0,–	366,–
CEN 36-3, painted	C	14046,–	on request	on request
Potential equalisation	C	274,–	0,–	274,–
CEN 36-3b, painted	C	22693,–	on request	on request
Potential equalisation	C	546,–	0,–	546,–
CEN 59-2, painted	C	12772,–	on request	on request
Potential equalisation	C	365,–	0,–	365,–
CEN 59-2 IBC, painted	C	13917,–	on request	on request
Potential equalisation	C	365,–	0,–	365,–
CEN 59-2b, painted	C	21982,–	on request	on request
Potential equalisation	C	729,–	0,–	729,–
CEN 59-2b IBC, painted	C	22754,–	on request	on request
Potential equalisation	C	729,–	0,–	729,–
CEN 59-3, painted	C	19663,–	on request	on request
Potential equalisation	C	545,–	0,–	545,–
CEN 59-3 IBC, painted	C	20812,–	on request	on request
Potential equalisation	C	545,–	0,–	545,–
CEN 59-3b, painted	C	31741,–	on request	on request
Potential equalisation	C	1089,–	0,–	1089,–
CEN 59-3b IBC, painted	C	33404,–	on request	on request
Potential equalisation	C	1089,–	0,–	1089,–
CEN 65-2 IBC, painted	C	15002,–	on request	on request
Potential equalisation	C	365,–	0,–	365,–
CEN 65-2b IBC, painted	C	25299,–	on request	on request
Potential equalisation	C	729,–	0,–	729,–
CEN 65-3 IBC, painted	C	21999,–	on request	on request
Potential equalisation	C	545,–	0,–	545,–
CEN 65-3b IBC, painted	C	35919,–	on request	on request
Potential equalisation	C	1089,–	0,–	1089,–

Prices in EUR, valid EXW DE-46354 Südlohn, DE-38820 Halberstadt, unpacked
Freight charges valid CPT Great Britain, islands & the following post code areas excluded: IC, ZE

BAUER GmbH
Eichendorffstr. 62
46354 Südlohn, Germany

Tel. +49 2862 70 90
info@bauer-suedlohn.com
www.bauer-suedlohn.com

Geschäftsführer
Patrick Bauer, Pascal Bauer
Amtsgericht Coesfeld HRB 5259

TÜVNORD
TÜV NORD CERT GmbH
DIN EN ISO 9001
tuev-nord.de

Price List 0726 en-GB
Environment / Storage

Shelf Container Type CEN	Category	Price	Freight charges	Price including freight charges
CEN 75-2, painted	C	16004,–	on request	on request
Potential equalisation	C	365,–	0,–	365,–
CEN 75-2b, painted	C	26485,–	on request	on request
Potential equalisation	C	729,–	0,–	729,–
CEN 75-3, painted	C	23086,–	on request	on request
Potential equalisation	C	545,–	0,–	545,–
CEN 75-3b, painted	C	37480,–	on request	on request
Potential equalisation	C	1089,–	0,–	1089,–
CEN 81-2, painted	C	16788,–	on request	on request
Potential equalisation	C	365,–	0,–	365,–
CEN 81-2b, painted	C	27692,–	on request	on request
Potential equalisation	C	729,–	0,–	729,–
CEN 81-3, painted	C	24174,–	on request	on request
Potential equalisation	C	545,–	0,–	545,–
CEN 81-3b, painted	C	39119,–	on request	on request
Potential equalisation	C	1089,–	0,–	1089,–

Sump Tray for Skips Type CW	Category	Price	Freight charges	Price including freight charges
CW 1, painted	B	2952,–	on request	on request
CW 2, painted	B	3226,–	on request	on request
CW 3, painted	B	3722,–	on request	on request

Sump Tray Type ECO	Category	Price	Freight charges	Price including freight charges
ECO 1/200, painted	B	246,–	192,–	438,–
ECO 1/200, hot-dip galvanized	B	256,–	192,–	448,–
ECO 2/200, painted	B	261,–	192,–	453,–
ECO 2/200, hot-dip galvanized	B	270,–	192,–	462,–
ECO 4/200, painted	B	285,–	192,–	477,–
ECO 4/200, hot-dip galvanized	B	297,–	192,–	489,–
ECO 4/400, painted	B	354,–	192,–	546,–
ECO 4/400, hot-dip galvanized	B	370,–	192,–	562,–
ECO 1/1000, painted	B	632,–	274,–	906,–
ECO 1/1000, hot-dip galvanized	B	759,–	274,–	1033,–
ECO 2/1000, painted	B	826,–	327,–	1153,–
ECO 2/1000, hot-dip galvanized	B	915,–	327,–	1242,–

Sump Tray Type ECO-A	Category	Price	Freight charges	Price including freight charges
ECO-A 1/1000, painted	B	831,–	274,–	1105,–
ECO-A 1/1000, hot-dip galvanized	B	971,–	274,–	1245,–
ECO-A 2/1000, painted	B	1221,–	436,–	1657,–
ECO-A 2/1000, hot-dip galvanized	B	1341,–	436,–	1777,–

Sump Tray Type ECO-S	Category	Price	Freight charges	Price including freight charges
ECO-S 2/200, hot-dip galvanized	B	3447,–	420,–	3867,–
ECO-S 4/200, hot-dip galvanized	B	4053,–	495,–	4548,–

Prices in EUR, valid EXW DE-46354 Südlohn, DE-38820 Halberstadt, unpacked
Freight charges valid CPT Great Britain, islands & the following post code areas excluded: IC, ZE

BAUER GmbH
Eichendorffstr. 62
46354 Südlohn, Germany

Tel. +49 2862 70 90
info@bauer-suedlohn.com
www.bauer-suedlohn.com

Geschäftsführer
Patrick Bauer, Pascal Bauer
Amtsgericht Coesfeld HRB 5259

TÜVNORD
TÜV NORD CERT GmbH
DIN EN ISO 9001
tuev-nord.de

Price List 0726 en-GB
Environment / Storage

Sump Tray Type ECO-S	Category	Price	Freight charges	Price including freight charges
ECO-S 4/400, hot-dip galvanized	B	5000,–	555,–	5555,–

Suspended Sump with Polyethylene Inlay Type EHW PE	Category	Price	Freight charges	Price including freight charges
EHW 1800 PE, painted	B	909,–	274,–	1183,–
EHW 1800 PE, hot-dip galvanized	B	922,–	274,–	1196,–
EHW 2200 PE, painted	B	987,–	274,–	1261,–
EHW 2200 PE, hot-dip galvanized	B	1028,–	274,–	1302,–
EHW 2700 PE, painted	B	1144,–	436,–	1580,–
EHW 2700 PE, hot-dip galvanized	B	1211,–	436,–	1647,–
EHW 3300 PE, painted	B	1653,–	436,–	2089,–
EHW 3300 PE, hot-dip galvanized	B	1727,–	436,–	2163,–

Suspended Sump Type EHW	Category	Price	Freight charges	Price including freight charges
EHW 1800, painted	B	509,–	274,–	783,–
EHW 1800, hot-dip galvanized	B	521,–	274,–	795,–
EHW 2200, painted	B	564,–	274,–	838,–
EHW 2200, hot-dip galvanized	B	605,–	274,–	879,–
EHW 2700, painted	B	648,–	327,–	975,–
EHW 2700, hot-dip galvanized	B	717,–	327,–	1044,–
EHW 3300, painted	B	1002,–	436,–	1438,–
EHW 3300, hot-dip galvanized	B	1076,–	436,–	1512,–
EHW 3600, painted	B	1050,–	436,–	1486,–
EHW 3600, hot-dip galvanized	B	1131,–	436,–	1567,–

Drum Pallet Type FP	Category	Price	Freight charges	Price including freight charges
FP 2, hot-dip galvanized	B	92,–	192,–	284,–

Drum Shelve Type FR	Category	Price	Freight charges	Price including freight charges
FR-1, hot-dip galvanized	B	293,–	157,–	450,–
Can Stand Type GS, hot-dip galvanized	B	65,–	18,–	83,–
Clip-on Rotating Support, galvanized	B	85,–	10,–	95,–
FR-2, hot-dip galvanized	B	375,–	157,–	532,–
Can Stand Type GS, hot-dip galvanized	B	65,–	18,–	83,–
Clip-on Rotating Support, galvanized	B	85,–	10,–	95,–
FR-3, hot-dip galvanized	B	419,–	157,–	576,–
Can Stand Type GS, hot-dip galvanized	B	65,–	18,–	83,–
Rotating Support RA 60, hot-dip galvanized	B	97,–	9,–	106,–

Sump Tray Type FRA	Category	Price	Freight charges	Price including freight charges
FRA-1, painted	B	310,–	192,–	502,–
Grid, hot-dip galvanized	B	67,–	16,–	83,–
FRA-1, hot-dip galvanized	B	367,–	192,–	559,–
Grid, hot-dip galvanized	B	67,–	16,–	83,–
FRA-2, painted	B	322,–	192,–	514,–
Grid, hot-dip galvanized	B	132,–	24,–	156,–

Prices in EUR, valid EXW DE-46354 Südlohn, DE-38820 Halberstadt, unpacked
Freight charges valid CPT Great Britain, islands & the following post code areas excluded: IC, ZE

BAUER GmbH
Eichendorffstr. 62
46354 Südlohn, Germany

Tel. +49 2862 70 90
info@bauer-suedlohn.com
www.bauer-suedlohn.com

Geschäftsführer
Patrick Bauer, Pascal Bauer
Amtsgericht Coesfeld HRB 5259

TÜVNORD
TÜV NORD CERT GmbH
DIN EN ISO 9001
tuev-nord.de

Price List 0726 en-GB
Environment / Storage

Sump Tray Type FRA	Category	Price	Freight charges	Price including freight charges
FRA-2, hot-dip galvanized	B	378,–	192,–	570,–
Grid, hot-dip galvanized	B	132,–	24,–	156,–
FRA-3, painted	B	322,–	192,–	514,–
Grid, hot-dip galvanized	B	132,–	24,–	156,–
FRA-3, hot-dip galvanized	B	378,–	192,–	570,–
Grid, hot-dip galvanized	B	132,–	24,–	156,–

Drum Shelf Type FRE/M	Category	Price	Freight charges	Price including freight charges
FRE-1/M, hot-dip galvanized	B	225,–	21,–	246,–
Clip-on Rotating Support, galvanized	B	85,–	10,–	95,–
Can Stand Type GS, hot-dip galvanized	B	65,–	18,–	83,–
FRE-2/M, hot-dip galvanized	B	261,–	22,–	283,–
Clip-on Rotating Support, galvanized	B	85,–	10,–	95,–
Can Stand Type GS, hot-dip galvanized	B	65,–	18,–	83,–
FRE-3/M, hot-dip galvanized	B	279,–	27,–	306,–
Rotating Support RA 60, hot-dip galvanized	B	97,–	9,–	106,–
Can Stand Type GS, hot-dip galvanized	B	65,–	18,–	83,–

Can Shelf Type FRE-G/M	Category	Price	Freight charges	Price including freight charges
FRE-G1/M, hot-dip galvanized	B	236,–	27,–	263,–
FRE-G2/M, hot-dip galvanized	B	274,–	32,–	306,–

Can Shelf for Small Cans Type FRG	Category	Price	Freight charges	Price including freight charges
FRG, hot-dip galvanized	B	381,–	157,–	538,–

Drum Stacking Pallet Type FSP-D	Category	Price	Freight charges	Price including freight charges
FSP-1 D, lackiert	B	845,–	274,–	1119,–
FSP-1 D, hot-dip galvanized	B	1106,–	274,–	1380,–
FSP-2 D, lackiert	B	901,–	274,–	1175,–
FSP-2 D, hot-dip galvanized	B	1222,–	274,–	1496,–
FSP-4 D, lackiert	B	1170,–	274,–	1444,–
FSP-4 D, hot-dip galvanized	B	1615,–	274,–	1889,–

Drum Stacking Pallet Type FSP-G	Category	Price	Freight charges	Price including freight charges
FSP-1 G, lackiert	B	821,–	274,–	1095,–
FSP-1 G, hot-dip galvanized	B	1089,–	274,–	1363,–
FSP-2 G, painted	B	879,–	274,–	1153,–
FSP-2 G, hot-dip galvanized	B	1197,–	274,–	1471,–
FSP-4 G, painted	B	1148,–	383,–	1531,–
FSP-4 G, hot-dip galvanized	B	1587,–	383,–	1970,–

Drum Stacking Pallet Type FSP	Category	Price	Freight charges	Price including freight charges
FSP-1, painted	B	484,–	192,–	676,–
FSP-1, hot-dip galvanized	B	727,–	274,–	1001,–
FSP-2, painted	B	655,–	274,–	929,–

Prices in EUR, valid EXW DE-46354 Südlohn, DE-38820 Halberstadt, unpacked
Freight charges valid CPT Great Britain, islands & the following post code areas excluded: IC, ZE

BAUER GmbH
Eichendorffstr. 62
46354 Südlohn, Germany

Tel. +49 2862 70 90
info@bauer-suedlohn.com
www.bauer-suedlohn.com

Geschäftsführer
Patrick Bauer, Pascal Bauer
Amtsgericht Coesfeld HRB 5259

TÜVNORD
TÜV NORD CERT GmbH
DIN EN ISO 9001
tuev-nord.de

Price List 0726 en-GB
Environment / Storage

Drum Stacking Pallet Type FSP	Category	Price	Freight charges	Price including freight charges
FSP-2, hot-dip galvanized	B	913,–	274,–	1187,–
FSP-4, painted	B	746,–	274,–	1020,–
FSP-4, hot-dip galvanized	B	1151,–	274,–	1425,–

Hazardous Materials Depot Type GD-A	Category	Price	Freight charges	Price including freight charges
GD-A, painted	C	762,–	274,–	1036,–
Drum Support FA 60-1, hot-dip galvanized	B	109,–	15,–	124,–
Drum Support FA 60-2, hot-dip galvanized	B	118,–	18,–	136,–
Drum Support FA 60-3, hot-dip galvanized	B	138,–	21,–	159,–
Can Shelf Type GR-A, galvanized	B	138,–	39,–	177,–
Can Shelf Type GR-B, galvanized	B	138,–	39,–	177,–
Can Shelf Type GR-C, galvanized	B	138,–	39,–	177,–
GD-A, hot-dip galvanized	C	960,–	274,–	1234,–
Drum Support FA 60-1, hot-dip galvanized	B	109,–	15,–	124,–
Drum Support FA 60-2, hot-dip galvanized	B	118,–	18,–	136,–
Drum Support FA 60-3, hot-dip galvanized	B	138,–	21,–	159,–
Can Shelf Type GR-A, galvanized	B	138,–	39,–	177,–
Can Shelf Type GR-B, galvanized	B	138,–	39,–	177,–
Can Shelf Type GR-C, galvanized	B	138,–	39,–	177,–

Hazardous Materials Depot Type GD-B	Category	Price	Freight charges	Price including freight charges
GD-B, painted	C	1363,–	274,–	1637,–
Drum Support FA 60-1, hot-dip galvanized	B	109,–	15,–	124,–
Drum Support FA 60-2, hot-dip galvanized	B	118,–	18,–	136,–
Drum Support FA 60-3, hot-dip galvanized	B	138,–	21,–	159,–
Can Shelf Type GR-A, galvanized	B	138,–	39,–	177,–
Can Shelf Type GR-B, galvanized	B	138,–	39,–	177,–
Can Shelf Type GR-C, galvanized	B	138,–	39,–	177,–
GD-B, hot-dip galvanized	C	1625,–	274,–	1899,–
Drum Support FA 60-1, hot-dip galvanized	B	109,–	15,–	124,–
Drum Support FA 60-2, hot-dip galvanized	B	118,–	18,–	136,–
Drum Support FA 60-3, hot-dip galvanized	B	138,–	21,–	159,–
Can Shelf Type GR-A, galvanized	B	138,–	39,–	177,–
Can Shelf Type GR-B, galvanized	B	138,–	39,–	177,–
Can Shelf Type GR-C, galvanized	B	138,–	39,–	177,–

Hazardous Materials Depot Type GD-C	Category	Price	Freight charges	Price including freight charges
GD-C, painted	C	1163,–	274,–	1437,–
Drum Support FA 60-1, hot-dip galvanized	B	109,–	15,–	124,–
Drum Support FA 60-2, hot-dip galvanized	B	118,–	18,–	136,–
Drum Support FA 60-3, hot-dip galvanized	B	138,–	21,–	159,–
Can Shelf Type GR-A, galvanized	B	138,–	39,–	177,–
Can Shelf Type GR-B, galvanized	B	138,–	39,–	177,–
Can Shelf Type GR-C, galvanized	B	138,–	39,–	177,–
GD-C, hot-dip galvanized	C	1314,–	274,–	1588,–

Prices in EUR, valid EXW DE-46354 Südlohn, DE-38820 Halberstadt, unpacked
Freight charges valid CPT Great Britain, islands & the following post code areas excluded: IC, ZE

BAUER GmbH
Eichendorffstr. 62
46354 Südlohn, Germany

Tel. +49 2862 70 90
info@bauer-suedlohn.com
www.bauer-suedlohn.com

Geschäftsführer
Patrick Bauer, Pascal Bauer
Amtsgericht Coesfeld HRB 5259

TÜVNORD
TÜV NORD CERT GmbH
DIN EN ISO 9001
tuev-nord.de

Price List 0726 en-GB
Environment / Storage

Hazardous Materials Depot Type GD-C	Category	Price	Freight charges	Price including freight charges
Drum Support FA 60-1, hot-dip galvanized	B	109,–	15,–	124,–
Drum Support FA 60-2, hot-dip galvanized	B	118,–	18,–	136,–
Drum Support FA 60-3, hot-dip galvanized	B	138,–	21,–	159,–
Can Shelf Type GR-A, galvanized	B	138,–	39,–	177,–
Can Shelf Type GR-B, galvanized	B	138,–	39,–	177,–
Can Shelf Type GR-C, galvanized	B	138,–	39,–	177,–

Hazardous Materials Depot Type GD-E	Category	Price	Freight charges	Price including freight charges
GD-E 2, galvanized	C	1562,–	383,–	1945,–
Drum Support FA 60-1, hot-dip galvanized	B	109,–	15,–	124,–
Drum Support FA 60-2, hot-dip galvanized	B	118,–	18,–	136,–
Drum Support FA 60-3, hot-dip galvanized	B	138,–	21,–	159,–
Can Shelf Type GR-A, galvanized	B	138,–	39,–	177,–
Can Shelf Type GR-B, galvanized	B	138,–	39,–	177,–
Can Shelf Type GR-C, galvanized	B	138,–	39,–	177,–
GD-E 4, galvanized	C	1907,–	459,–	2366,–
Drum Support FA 60-1, hot-dip galvanized	B	109,–	15,–	124,–
Drum Support FA 60-2, hot-dip galvanized	B	118,–	18,–	136,–
Drum Support FA 60-3, hot-dip galvanized	B	138,–	21,–	159,–
Can Shelf Type GR-A, galvanized	B	138,–	39,–	177,–
Can Shelf Type GR-B, galvanized	B	138,–	39,–	177,–
Can Shelf Type GR-C, galvanized	B	138,–	39,–	177,–

Hazardous Materials Depot Type GD-E/IBC	Category	Price	Freight charges	Price including freight charges
GD-E/IBC, galvanized	C	2367,–	1187,–	3554,–
GD-E/IBC-2, galvanized	C	3552,–	461,–	4013,–

Hazardous Materials Depot Type GD-N	Category	Price	Freight charges	Price including freight charges
GD-N 2, galvanized	C	1362,–	383,–	1745,–
Intermediate Storage Level, hot-dip galvanized	C	106,–	18,–	124,–
Drum Support FA 60-1, hot-dip galvanized	B	109,–	15,–	124,–
Can Shelf Type GR-A, galvanized	B	138,–	39,–	177,–
Can Shelf Type GR-B, galvanized	B	138,–	39,–	177,–
Can Shelf Type GR-C, galvanized	B	138,–	39,–	177,–
GD-N 4, galvanized	C	1697,–	383,–	2080,–
Intermediate Storage Level, hot-dip galvanized	C	106,–	18,–	124,–
Drum Support FA 60-1, hot-dip galvanized	B	109,–	15,–	124,–
Drum Support FA 60-2, hot-dip galvanized	B	118,–	18,–	136,–
Drum Support FA 200-1, hot-dip galvanized	B	118,–	15,–	133,–
Drum Support FA 200-2, hot-dip galvanized	B	138,–	22,–	160,–
Can Shelf Type GR-A, galvanized	B	138,–	39,–	177,–
Can Shelf Type GR-B, galvanized	B	138,–	39,–	177,–
Can Shelf Type GR-C, galvanized	B	138,–	39,–	177,–

Prices in EUR, valid EXW DE-46354 Südlohn, DE-38820 Halberstadt, unpacked
Freight charges valid CPT Great Britain, islands & the following post code areas excluded: IC, ZE

BAUER GmbH
Eichendorffstr. 62
46354 Südlohn, Germany

Tel. +49 2862 70 90
info@bauer-suedlohn.com
www.bauer-suedlohn.com

Geschäftsführer
Patrick Bauer, Pascal Bauer
Amtsgericht Coesfeld HRB 5259

TÜVNORD
TÜV NORD CERT GmbH
DIN EN ISO 9001
tuev-nord.de

Price List 0726 en-GB
Environment / Storage

Hazardous Materials DepotType GD-N/R	Category	Price	Freight charges	Price including freight charges
GD-N/R 2, galvanized	C	1562,–	383,–	1945,–
Intermediate Storage Level, hot-dip galvanized	C	106,–	18,–	124,–
Drum Support FA 60-1, hot-dip galvanized	B	109,–	15,–	124,–
Can Shelf Type GR-A, galvanized	B	138,–	39,–	177,–
Can Shelf Type GR-B, galvanized	B	138,–	39,–	177,–
Can Shelf Type GR-C, galvanized	B	138,–	39,–	177,–
GD-N/R 4, galvanized	C	1901,–	383,–	2284,–
Intermediate Storage Level, hot-dip galvanized	C	106,–	18,–	124,–
Drum Support FA 60-1, hot-dip galvanized	B	109,–	15,–	124,–
Drum Support FA 60-2, hot-dip galvanized	B	118,–	18,–	136,–
Drum Support FA 200-1, hot-dip galvanized	B	118,–	15,–	133,–
Drum Support FA 200-2, hot-dip galvanized	B	138,–	22,–	160,–
Can Shelf Type GR-A, galvanized	B	138,–	39,–	177,–
Can Shelf Type GR-B, galvanized	B	138,–	39,–	177,–
Can Shelf Type GR-C, galvanized	B	138,–	39,–	177,–

Gas Cylinder Containers Type GFC-B	Category	Price	Freight charges	Price including freight charges
GFC-B M0, painted	B	3406,–	1187,–	4593,–
Fixture with Safety Chain to Secure Gas Cylinders, hot-dip galvanized	B	72,–	12,–	84,–
Rack for Gas Cylinders GFG-2, galvanized	B	204,–	157,–	361,–
GFC-B M1, painted	B	3949,–	1200,–	5149,–
Fixture with Safety Chain to Secure Gas Cylinders, hot-dip galvanized	B	72,–	12,–	84,–
Rack for Gas Cylinders GFG-2, galvanized	B	204,–	157,–	361,–
GFC-B M2, painted	B	4114,–	1200,–	5314,–
Fixture with Safety Chain to Secure Gas Cylinders, hot-dip galvanized	B	72,–	12,–	84,–
Rack for Gas Cylinders GFG-2, galvanized	B	204,–	157,–	361,–
GFC-B M3, painted	B	4761,–	1200,–	5961,–
Fixture with Safety Chain to Secure Gas Cylinders, hot-dip galvanized	B	72,–	12,–	84,–
Rack for Gas Cylinders GFG-2, galvanized	B	204,–	157,–	361,–
GFC-B M4, painted	B	5355,–	1211,–	6566,–
Fixture with Safety Chain to Secure Gas Cylinders, hot-dip galvanized	B	72,–	12,–	84,–
Rack for Gas Cylinders GFG-2, galvanized	B	204,–	157,–	361,–
GFC-B M5, painted	B	7439,–	1211,–	8650,–
Fixture with Safety Chain to Secure Gas Cylinders, hot-dip galvanized	B	72,–	12,–	84,–
Rack for Gas Cylinders GFG-2, galvanized	B	204,–	157,–	361,–

Gas Cylinder Containers Type GFC-B/W	Category	Price	Freight charges	Price including freight charges
GFC-B/W M1, painted	B	4216,–	1200,–	5416,–
Fixture with Safety Chain to Secure Gas Cylinders, hot-dip galvanized	B	72,–	12,–	84,–
GFC-B/W M2, painted	B	4421,–	1200,–	5621,–
Fixture with Safety Chain to Secure Gas Cylinders, hot-dip galvanized	B	72,–	12,–	84,–
GFC-B/W M3, painted	B	5076,–	1200,–	6276,–
Fixture with Safety Chain to Secure Gas Cylinders, hot-dip galvanized	B	72,–	12,–	84,–
Rack for Gas Cylinders GFG-2, galvanized	B	204,–	157,–	361,–
GFC-B/W M4, painted	B	5675,–	1211,–	6886,–

Prices in EUR, valid EXW DE-46354 Südlohn, DE-38820 Halberstadt, unpacked
Freight charges valid CPT Great Britain, islands & the following post code areas excluded: IC, ZE

BAUER GmbH
Eichendorffstr. 62
46354 Südlohn, Germany

Tel. +49 2862 70 90
info@bauer-suedlohn.com
www.bauer-suedlohn.com

Geschäftsführer
Patrick Bauer, Pascal Bauer
Amtsgericht Coesfeld HRB 5259

TÜVNORD
TÜV NORD CERT GmbH
DIN EN ISO 9001
tuev-nord.de

Price List 0726 en-GB
Environment / Storage

Gas Cylinder Containers Type GFC-B/W	Category	Price	Freight charges	Price including freight charges
Fixture with Safety Chain to Secure Gas Cylinders, hot-dip galvanized	B	72,–	12,–	84,–
Rack for Gas Cylinders GFG-2, galvanized	B	204,–	157,–	361,–
GFC-B/W M5, painted	B	7844,–	1211,–	9055,–
Fixture with Safety Chain to Secure Gas Cylinders, hot-dip galvanized	B	72,–	12,–	84,–
Rack for Gas Cylinders GFG-2, galvanized	B	204,–	157,–	361,–

Gas Cylinder Containers Type GFC-E/G	Category	Price	Freight charges	Price including freight charges
GFC-E/G M0, hot-dip galvanized	B	1540,–	383,–	1923,–
Fixture with Safety Chain to Secure Gas Cylinders, hot-dip galvanized	B	40,–	12,–	52,–
Rack for Gas Cylinders GFG-2, galvanized	B	204,–	157,–	361,–
Access Ramp Type AR, galvanized	B	163,–	22,–	185,–
GFC-E/G M1, hot-dip galvanized	B	2191,–	1200,–	3391,–
Fixture with Safety Chain to Secure Gas Cylinders, hot-dip galvanized	B	40,–	12,–	52,–
Rack for Gas Cylinders GFG-2, galvanized	B	204,–	157,–	361,–
Access Ramp Type AR, galvanized	B	163,–	22,–	185,–
Central Dividing Wall, galvanized	B	87,–	22,–	109,–
GFC-E/G M2, hot-dip galvanized	B	2401,–	1200,–	3601,–
Fixture with Safety Chain to Secure Gas Cylinders, hot-dip galvanized	B	40,–	12,–	52,–
Rack for Gas Cylinders GFG-2, galvanized	B	204,–	157,–	361,–
Access Ramp Type AR, galvanized	B	163,–	22,–	185,–
Central Dividing Wall, galvanized	B	129,–	32,–	161,–
GFC-E/G M3, hot-dip galvanized	B	2671,–	1200,–	3871,–
Fixture with Safety Chain to Secure Gas Cylinders, hot-dip galvanized	B	40,–	12,–	52,–
Rack for Gas Cylinders GFG-2, galvanized	B	204,–	157,–	361,–
Access Ramp Type AR, galvanized	B	163,–	22,–	185,–
Central Dividing Wall, galvanized	B	129,–	32,–	161,–
GFC-E/G M4, hot-dip galvanized	B	2895,–	1211,–	4106,–
Fixture with Safety Chain to Secure Gas Cylinders, hot-dip galvanized	B	40,–	12,–	52,–
Rack for Gas Cylinders GFG-2, galvanized	B	204,–	157,–	361,–
Access Ramp Type AR, galvanized	B	163,–	22,–	185,–
Central Dividing Wall, galvanized	B	129,–	32,–	161,–
GFC-E/G M5, hot-dip galvanized	B	3587,–	1211,–	4798,–
Fixture with Safety Chain to Secure Gas Cylinders, hot-dip galvanized	B	40,–	12,–	52,–
Rack for Gas Cylinders GFG-2, galvanized	B	204,–	157,–	361,–
Access Ramp Type AR, galvanized	B	163,–	22,–	185,–
Central Dividing Wall, galvanized	B	191,–	40,–	231,–

Gas Cylinder Containers Type GFC-E/T	Category	Price	Freight charges	Price including freight charges
GFC-E/T M0, hot-dip galvanized	B	1560,–	383,–	1943,–
Fixture with Safety Chain to Secure Gas Cylinders, hot-dip galvanized	B	40,–	12,–	52,–
Rack for Gas Cylinders GFG-2, galvanized	B	204,–	157,–	361,–
Access Ramp Type AR, galvanized	B	163,–	22,–	185,–
GFC-E/T M1, hot-dip galvanized	B	2229,–	1200,–	3429,–
Fixture with Safety Chain to Secure Gas Cylinders, hot-dip galvanized	B	40,–	12,–	52,–
Rack for Gas Cylinders GFG-2, galvanized	B	204,–	157,–	361,–

Prices in EUR, valid EXW DE-46354 Südlohn, DE-38820 Halberstadt, unpacked
Freight charges valid CPT Great Britain, islands & the following post code areas excluded: IC, ZE

BAUER GmbH
Eichendorffstr. 62
46354 Südlohn, Germany

Tel. +49 2862 70 90
info@bauer-suedlohn.com
www.bauer-suedlohn.com

Geschäftsführer
Patrick Bauer, Pascal Bauer
Amtsgericht Coesfeld HRB 5259

TÜVNORD
TÜV NORD CERT GmbH
DIN EN ISO 9001
tuev-nord.de

Price List 0726 en-GB
Environment / Storage

Gas Cylinder Containers Type GFC-E/T	Category	Price	Freight charges	Price including freight charges
Access Ramp Type AR, galvanized	B	163,–	22,–	185,–
Central Dividing Wall, galvanized	B	87,–	22,–	109,–
GFC-E/T M2, hot-dip galvanized	B	2448,–	1200,–	3648,–
Fixture with Safety Chain to Secure Gas Cylinders, hot-dip galvanized	B	40,–	12,–	52,–
Rack for Gas Cylinders GFG-2, galvanized	B	204,–	157,–	361,–
Access Ramp Type AR, galvanized	B	163,–	22,–	185,–
Central Dividing Wall, galvanized	B	129,–	32,–	161,–
GFC-E/T M3, hot-dip galvanized	B	2737,–	1200,–	3937,–
Fixture with Safety Chain to Secure Gas Cylinders, hot-dip galvanized	B	40,–	12,–	52,–
Rack for Gas Cylinders GFG-2, galvanized	B	204,–	157,–	361,–
Access Ramp Type AR, galvanized	B	163,–	22,–	185,–
Central Dividing Wall, galvanized	B	129,–	32,–	161,–
GFC-E/T M4, hot-dip galvanized	B	2960,–	1211,–	4171,–
Fixture with Safety Chain to Secure Gas Cylinders, hot-dip galvanized	B	40,–	12,–	52,–
Rack for Gas Cylinders GFG-2, galvanized	B	204,–	157,–	361,–
Access Ramp Type AR, galvanized	B	163,–	22,–	185,–
Central Dividing Wall, galvanized	B	129,–	32,–	161,–
GFC-E/T M5, hot-dip galvanized	B	3678,–	1211,–	4889,–
Fixture with Safety Chain to Secure Gas Cylinders, hot-dip galvanized	B	40,–	12,–	52,–
Rack for Gas Cylinders GFG-2, galvanized	B	204,–	157,–	361,–
Access Ramp Type AR, galvanized	B	163,–	22,–	185,–
Central Dividing Wall, galvanized	B	191,–	40,–	231,–

Gas Cylinder Containers Type GFC-M/D	Category	Price	Freight charges	Price including freight charges
GFC-M0/D, hot-dip galvanized	B	1028,–	274,–	1302,–
Grid Floor, hot-dip galvanized	B	152,–	62,–	214,–
Fixture with Safety Chain to Secure Gas Cylinders, hot-dip galvanized	B	40,–	12,–	52,–
Rack for Gas Cylinders GFG-2, galvanized	B	204,–	157,–	361,–
GFC-M1/D, hot-dip galvanized	B	1247,–	383,–	1630,–
Grid Floor, hot-dip galvanized	B	274,–	157,–	431,–
Fixture with Safety Chain to Secure Gas Cylinders, hot-dip galvanized	B	40,–	12,–	52,–
Rack for Gas Cylinders GFG-2, galvanized	B	204,–	157,–	361,–
GFC-M2/D, hot-dip galvanized	B	1327,–	383,–	1710,–
Grid Floor, hot-dip galvanized	B	375,–	157,–	532,–
Fixture with Safety Chain to Secure Gas Cylinders, hot-dip galvanized	B	40,–	12,–	52,–
Rack for Gas Cylinders GFG-2, galvanized	B	204,–	157,–	361,–
GFC-M3/D, hot-dip galvanized	B	1498,–	383,–	1881,–
Grid Floor, hot-dip galvanized	B	510,–	239,–	749,–
Fixture with Safety Chain to Secure Gas Cylinders, hot-dip galvanized	B	40,–	12,–	52,–
Rack for Gas Cylinders GFG-2, galvanized	B	204,–	157,–	361,–
GFC-M4/D, hot-dip galvanized	B	1601,–	383,–	1984,–
Grid Floor, hot-dip galvanized	B	627,–	239,–	866,–
Fixture with Safety Chain to Secure Gas Cylinders, hot-dip galvanized	B	40,–	12,–	52,–
Rack for Gas Cylinders GFG-2, galvanized	B	204,–	157,–	361,–
GFC-M5/D, hot-dip galvanized	B	1903,–	459,–	2362,–
Grid Floor, hot-dip galvanized	B	765,–	239,–	1004,–

Prices in EUR, valid EXW DE-46354 Südlohn, DE-38820 Halberstadt, unpacked
Freight charges valid CPT Great Britain, islands & the following post code areas excluded: IC, ZE

BAUER GmbH
Eichendorffstr. 62
46354 Südlohn, Germany

Tel. +49 2862 70 90
info@bauer-suedlohn.com
www.bauer-suedlohn.com

Geschäftsführer
Patrick Bauer, Pascal Bauer
Amtsgericht Coesfeld HRB 5259

TÜVNORD
TÜV NORD CERT GmbH
DIN EN ISO 9001
tuev-nord.de

Price List 0726 en-GB
Environment / Storage

Gas Cylinder Containers Type GFC-M/D	Category	Price	Freight charges	Price including freight charges
Fixture with Safety Chain to Secure Gas Cylinders, hot-dip galvanized	B	40,–	12,–	52,–
Rack for Gas Cylinders GFG-2, galvanized	B	204,–	157,–	361,–

Gas Cylinder Containers Type GFC-M	Category	Price	Freight charges	Price including freight charges
GFC-M1, hot-dip galvanized	B	1101,–	274,–	1375,–
Grid Floor, hot-dip galvanized	B	274,–	157,–	431,–
Fixture with Safety Chain to Secure Gas Cylinders, hot-dip galvanized	B	40,–	12,–	52,–
Rack for Gas Cylinders GFG-2, galvanized	B	204,–	157,–	361,–
GFC-M2, hot-dip galvanized	B	1169,–	383,–	1552,–
Grid Floor, hot-dip galvanized	B	375,–	157,–	532,–
Fixture with Safety Chain to Secure Gas Cylinders, hot-dip galvanized	B	40,–	12,–	52,–
Rack for Gas Cylinders GFG-2, galvanized	B	204,–	157,–	361,–
GFC-M3, hot-dip galvanized	B	1312,–	383,–	1695,–
Grid Floor, hot-dip galvanized	B	510,–	239,–	749,–
Fixture with Safety Chain to Secure Gas Cylinders, hot-dip galvanized	B	40,–	12,–	52,–
Rack for Gas Cylinders GFG-2, galvanized	B	204,–	157,–	361,–
GFC-M4, hot-dip galvanized	B	1380,–	383,–	1763,–
Grid Floor, hot-dip galvanized	B	627,–	239,–	866,–
Fixture with Safety Chain to Secure Gas Cylinders, hot-dip galvanized	B	40,–	12,–	52,–
Rack for Gas Cylinders GFG-2, galvanized	B	204,–	157,–	361,–
GFC-M5, hot-dip galvanized	B	1602,–	383,–	1985,–
Grid Floor, hot-dip galvanized	B	765,–	239,–	1004,–
Fixture with Safety Chain to Secure Gas Cylinders, hot-dip galvanized	B	40,–	12,–	52,–
Rack for Gas Cylinders GFG-2, galvanized	B	204,–	157,–	361,–

Gas Cylinder Containers Type GFC-M/D-DF	Category	Price	Freight charges	Price including freight charges
GFC-M1/D-DF, hot-dip galvanized	B	1424,–	383,–	1807,–
Grid Floor, hot-dip galvanized	B	274,–	157,–	431,–
Fixture with Safety Chain to Secure Gas Cylinders, hot-dip galvanized	B	40,–	12,–	52,–
Rack for Gas Cylinders GFG-2, galvanized	B	204,–	157,–	361,–
GFC-M2/D-DF, hot-dip galvanized	B	1503,–	383,–	1886,–
Grid Floor, hot-dip galvanized	B	375,–	157,–	532,–
Fixture with Safety Chain to Secure Gas Cylinders, hot-dip galvanized	B	40,–	12,–	52,–
Rack for Gas Cylinders GFG-2, galvanized	B	204,–	157,–	361,–
GFC-M3/D-DF, hot-dip galvanized	B	1675,–	383,–	2058,–
Grid Floor, hot-dip galvanized	B	510,–	239,–	749,–
Fixture with Safety Chain to Secure Gas Cylinders, hot-dip galvanized	B	40,–	12,–	52,–
Rack for Gas Cylinders GFG-2, galvanized	B	204,–	157,–	361,–
GFC-M4/D-DF, hot-dip galvanized	B	1810,–	459,–	2269,–
Grid Floor, hot-dip galvanized	B	627,–	239,–	866,–
Fixture with Safety Chain to Secure Gas Cylinders, hot-dip galvanized	B	40,–	12,–	52,–
Rack for Gas Cylinders GFG-2, galvanized	B	204,–	157,–	361,–
GFC-M5/D-DF, hot-dip galvanized	B	2112,–	459,–	2571,–
Grid Floor, hot-dip galvanized	B	765,–	239,–	1004,–
Fixture with Safety Chain to Secure Gas Cylinders, hot-dip galvanized	B	40,–	12,–	52,–

Prices in EUR, valid EXW DE-46354 Südlohn, DE-38820 Halberstadt, unpacked
Freight charges valid CPT Great Britain, islands & the following post code areas excluded: IC, ZE

BAUER GmbH
Eichendorffstr. 62
46354 Südlohn, Germany

Tel. +49 2862 70 90
info@bauer-suedlohn.com
www.bauer-suedlohn.com

Geschäftsführer
Patrick Bauer, Pascal Bauer
Amtsgericht Coesfeld HRB 5259

TÜVNORD
TÜV NORD CERT GmbH
DIN EN ISO 9001
tuev-nord.de

Price List 0726 en-GB
Environment / Storage

Gas Cylinder Containers Type GFC-M/D-DF	Category	Price	Freight charges	Price including freight charges
Rack for Gas Cylinders GFG-2, galvanized	B	204,–	157,–	361,–
GFC-M6/D-DF, hot-dip galvanized	B	2775,–	624,–	3399,–
Fixture with Safety Chain to Secure Gas Cylinders, hot-dip galvanized	B	40,–	12,–	52,–
Rack for Gas Cylinders GFG-2, galvanized	B	204,–	157,–	361,–

Gas Cylinder Containers Type GFC-M-DF	Category	Price	Freight charges	Price including freight charges
GFC-M1-DF, hot-dip galvanized	B	1276,–	274,–	1550,–
Grid Floor, hot-dip galvanized	B	274,–	157,–	431,–
Fixture with Safety Chain to Secure Gas Cylinders, hot-dip galvanized	B	40,–	12,–	52,–
Rack for Gas Cylinders GFG-2, galvanized	B	204,–	157,–	361,–
GFC-M2-DF, hot-dip galvanized	B	1346,–	383,–	1729,–
Grid Floor, hot-dip galvanized	B	375,–	157,–	532,–
Fixture with Safety Chain to Secure Gas Cylinders, hot-dip galvanized	B	40,–	12,–	52,–
Rack for Gas Cylinders GFG-2, galvanized	B	204,–	157,–	361,–
GFC-M3-DF, hot-dip galvanized	B	1490,–	383,–	1873,–
Grid Floor, hot-dip galvanized	B	510,–	239,–	749,–
Fixture with Safety Chain to Secure Gas Cylinders, hot-dip galvanized	B	40,–	12,–	52,–
Rack for Gas Cylinders GFG-2, galvanized	B	204,–	157,–	361,–
GFC-M4-DF, hot-dip galvanized	B	1591,–	383,–	1974,–
Grid Floor, hot-dip galvanized	B	627,–	239,–	866,–
Fixture with Safety Chain to Secure Gas Cylinders, hot-dip galvanized	B	40,–	12,–	52,–
Rack for Gas Cylinders GFG-2, galvanized	B	204,–	157,–	361,–
GFC-M5-DF, hot-dip galvanized	B	1812,–	459,–	2271,–
Grid Floor, hot-dip galvanized	B	765,–	239,–	1004,–
Fixture with Safety Chain to Secure Gas Cylinders, hot-dip galvanized	B	40,–	12,–	52,–
Rack for Gas Cylinders GFG-2, galvanized	B	204,–	157,–	361,–

Gas Cylinder Depot Type GFD-G	Category	Price	Freight charges	Price including freight charges
GFD-G 1, galvanized	B	429,–	274,–	703,–
GFD-G 2, galvanized	B	790,–	274,–	1064,–

Gas Cylinder Depot Type GFD-L	Category	Price	Freight charges	Price including freight charges
GFD-L 1, galvanized	B	462,–	192,–	654,–
GFD-L 2, galvanized	B	880,–	274,–	1154,–

Gas Cylinder Depot Type GFD-R	Category	Price	Freight charges	Price including freight charges
GFD-R 2, painted	B	774,–	192,–	966,–
GFD-R 2, hot-dip galvanized	B	798,–	192,–	990,–
GFD-R 4, painted	B	879,–	192,–	1071,–
GFD-R 4, hot-dip galvanized	B	909,–	192,–	1101,–

Hazardous Materials Cabinet Type GS	Category	Price	Freight charges	Price including freight charges
GS-1, painted	B	789,–	274,–	1063,–
Intermediate Storage Level, galvanized	B	90,–	14,–	104,–
GS-1, hot-dip galvanized	B	849,–	274,–	1123,–

Prices in EUR, valid EXW DE-46354 Südlohn, DE-38820 Halberstadt, unpacked
Freight charges valid CPT Great Britain, islands & the following post code areas excluded: IC, ZE

BAUER GmbH
Eichendorffstr. 62
46354 Südlohn, Germany

Tel. +49 2862 70 90
info@bauer-suedlohn.com
www.bauer-suedlohn.com

Geschäftsführer
Patrick Bauer, Pascal Bauer
Amtsgericht Coesfeld HRB 5259

TÜVNORD
TÜV NORD CERT GmbH
DIN EN ISO 9001
tuev-nord.de

Price List 0726 en-GB
Environment / Storage

Hazardous Materials Cabinet Type GS	Category	Price	Freight charges	Price including freight charges
Intermediate Storage Level, galvanized	B	90,–	14,–	104,–
GS-2, painted	B	1049,–	383,–	1432,–
Intermediate Storage Level, galvanized	B	90,–	14,–	104,–
GS-2, hot-dip galvanized	B	1139,–	383,–	1522,–
Intermediate Storage Level, galvanized	B	90,–	14,–	104,–
GS-3, painted	B	2143,–	459,–	2602,–
GS-3, hot-dip galvanized	B	2295,–	459,–	2754,–
GS-4, painted	B	2154,–	1187,–	3341,–
GS-4, hot-dip galvanized	B	2340,–	1187,–	3527,–

Gas Cylinder Wall Bracket Type GWH	Category	Price	Freight charges	Price including freight charges
GWH 140-I, hot-dip galvanized	F	26,–	74,–	100,–
GWH 140-II, hot-dip galvanized	F	40,–	74,–	114,–
GWH 140-III, hot-dip galvanized	F	59,–	74,–	133,–
GWH 230-I, hot-dip galvanized	F	28,–	74,–	102,–
GWH 230-II, hot-dip galvanized	F	43,–	74,–	117,–
GWH 230-III, hot-dip galvanized	F	65,–	74,–	139,–
GWH 320-I, hot-dip galvanized	F	29,–	74,–	103,–
GWH 320-II, hot-dip galvanized	F	48,–	74,–	122,–
GWH 320-III, hot-dip galvanized	F	72,–	74,–	146,–

Tilting Canister Stand Type KAH	Category	Price	Freight charges	Price including freight charges
KAH-5, galvanized	A	96,–	74,–	170,–
KAH-25, galvanized	A	109,–	74,–	183,–
KAH-60, galvanized	A	140,–	74,–	214,–

Spill Tray for Canisters/Small Cans Type KGW	Category	Price	Freight charges	Price including freight charges
KGW 1, galvanized	B	92,–	74,–	166,–
KGW 1 V4A, stainless steel 1.4571	B	280,–	74,–	354,–
KGW 2, galvanized	B	96,–	74,–	170,–
KGW 2 V4A, stainless steel 1.4571	B	322,–	74,–	396,–
KGW 3, galvanized	B	100,–	74,–	174,–
KGW 3 V4A, stainless steel 1.4571	B	400,–	74,–	474,–
KGW 4, galvanized	B	117,–	192,–	309,–
KGW 4 V4A, stainless steel 1.4571	B	472,–	192,–	664,–
KGW 5, galvanized	B	161,–	192,–	353,–
KGW 5 V4A, stainless steel 1.4571	B	614,–	192,–	806,–

Spill Tray for Canisters/Small Cans Type KGW/M	Category	Price	Freight charges	Price including freight charges
KGW 1/M, galvanized	B	129,–	74,–	203,–
KGW 1/M V4A, stainless steel 1.4571	B	421,–	74,–	495,–
KGW 2/M, galvanized	B	137,–	74,–	211,–
KGW 2/M V4A, stainless steel 1.4571	B	485,–	74,–	559,–
KGW 3/M, galvanized	B	157,–	74,–	231,–
KGW 3/M V4A, stainless steel 1.4571	B	610,–	74,–	684,–

Prices in EUR, valid EXW DE-46354 Südlohn, DE-38820 Halberstadt, unpacked
Freight charges valid CPT Great Britain, islands & the following post code areas excluded: IC, ZE

BAUER GmbH
Eichendorffstr. 62
46354 Südlohn, Germany

Tel. +49 2862 70 90
info@bauer-suedlohn.com
www.bauer-suedlohn.com

Geschäftsführer
Patrick Bauer, Pascal Bauer
Amtsgericht Coesfeld HRB 5259

TÜVNORD
TÜV NORD CERT GmbH
DIN EN ISO 9001
tuev-nord.de

Price List 0726 en-GB
Environment / Storage

Spill Tray for Canisters/Small Cans Type KGW/M	Category	Price	Freight charges	Price including freight charges
KGW 4/M, galvanized	B	182,–	192,–	374,–
KGW 4/M V4A, stainless steel 1.4571	B	730,–	192,–	922,–
KGW 5/M, galvanized	B	235,–	192,–	427,–
KGW 5/M V4A, stainless steel 1.4571	B	962,–	192,–	1154,–

Spill Tray for Canisters/Small Cans on Pallets Type KGW-P	Category	Price	Freight charges	Price including freight charges
KGW-P 1, galvanized	B	98,–	74,–	172,–
KGW-P 1 V4A, stainless steel 1.4571	B	276,–	74,–	350,–
KGW-P 2, galvanized	B	147,–	74,–	221,–
KGW-P 2 V4A, stainless steel 1.4571	B	396,–	74,–	470,–
KGW-P 3, galvanized	B	185,–	192,–	377,–
KGW-P 3 V4A, stainless steel 1.4571	B	607,–	74,–	681,–
KGW-P 4, galvanized	B	175,–	74,–	249,–
KGW-P 4 V4A, stainless steel 1.4571	B	466,–	74,–	540,–

Spill Tray for Canisters/Small Cans on Pallets Type KGW-P/M	Category	Price	Freight charges	Price including freight charges
KGW-P 1/M, galvanized	B	142,–	74,–	216,–
KGW-P 1/M V4A, stainless steel 1.4571	B	399,–	74,–	473,–
KGW-P 2/M, galvanized	B	218,–	74,–	292,–
KGW-P 2/M V4A, stainless steel 1.4571	B	579,–	74,–	653,–
KGW-P 3/M, galvanized	B	265,–	192,–	457,–
KGW-P 3/M V4A, stainless steel 1.4571	B	895,–	192,–	1087,–
KGW-P 4/M, galvanized	B	250,–	192,–	442,–
KGW-P 4/M V4A, stainless steel 1.4571	B	719,–	74,–	793,–

Diesel Filling Point Type KPS	Category	Price	Freight charges	Price including freight charges
KPS 1, painted	B	2966,–	on request	on request
KPS 2, painted	B	3854,–	on request	on request
KPS 3, painted	B	5432,–	on request	on request

Polyethylene Sump Tray for Pallets Type KWP-P	Category	Price	Freight charges	Price including freight charges
KWP-P 20, made of robust polyethylene	B	48,–	74,–	122,–
Deck with Punched Holes LR-PE 20, robust polyethylene, black	B	64,–	14,–	78,–
KWP-P 30, made of robust polyethylene	B	58,–	74,–	132,–
Deck with Punched Holes LR-PE 30, robust polyethylene, black	B	66,–	14,–	80,–
KWP-P 40, made of robust polyethylene	B	65,–	74,–	139,–
Deck with Punched Holes LR-PE 40, robust polyethylene, black	B	70,–	14,–	84,–
KWP-P 60, made of robust polyethylene	B	103,–	74,–	177,–
Deck with punched holes LR-PE 60, robust polyethylene, black	B	73,–	14,–	87,–
KWP-P 100, made of robust polyethylene	B	117,–	192,–	309,–
Deck with punched holes LR-PE 100, robust polyethylene, black	B	90,–	16,–	106,–

Mobile Sump Tray with Perforated Panel Type LPW	Category	Price	Freight charges	Price including freight charges
LPW 60-1, painted	B	627,–	192,–	819,–
Tool Deposit	B	32,–	16,–	48,–

Prices in EUR, valid EXW DE-46354 Südlohn, DE-38820 Halberstadt, unpacked
Freight charges valid CPT Great Britain, islands & the following post code areas excluded: IC, ZE

BAUER GmbH
Eichendorffstr. 62
46354 Südlohn, Germany

Tel. +49 2862 70 90
info@bauer-suedlohn.com
www.bauer-suedlohn.com

Geschäftsführer
Patrick Bauer, Pascal Bauer
Amtsgericht Coesfeld HRB 5259

TÜVNORD
TÜV NORD CERT GmbH
DIN EN ISO 9001
tuev-nord.de

Price List 0726 en-GB
Environment / Storage

Mobile Sump Tray with Perforated Panel Type LPW	Category	Price	Freight charges	Price including freight charges
Drip Tray	B	50,–	16,–	66,–
LPW 60-1, hot-dip galvanized	B	645,–	192,–	837,–
Tool Deposit	B	32,–	16,–	48,–
Drip Tray	B	50,–	16,–	66,–
LPW 60-2, painted	B	640,–	192,–	832,–
Tool Deposit	B	32,–	16,–	48,–
Drip Tray	B	50,–	16,–	66,–
LPW 60-2, hot-dip galvanized	B	661,–	192,–	853,–
Tool Deposit	B	32,–	16,–	48,–
Drip Tray	B	50,–	16,–	66,–
LPW 60-3, painted	B	646,–	192,–	838,–
Tool Deposit	B	32,–	16,–	48,–
Drip Tray	B	50,–	16,–	66,–
LPW 60-3, hot-dip galvanized	B	667,–	192,–	859,–
Tool Deposit	B	32,–	16,–	48,–
Drip Tray	B	50,–	16,–	66,–
LPW 200-1, painted	B	822,–	274,–	1096,–
Tool Deposit	B	32,–	16,–	48,–
Drip Tray	B	50,–	16,–	66,–
LPW 200-1, hot-dip galvanized	B	856,–	274,–	1130,–
Tool Deposit	B	32,–	16,–	48,–
Drip Tray	B	50,–	16,–	66,–
LPW 200-2, painted	B	863,–	274,–	1137,–
Tool Deposit	B	32,–	16,–	48,–
Drip Tray	B	50,–	16,–	66,–
LPW 200-2, hot-dip galvanized	B	899,–	274,–	1173,–
Tool Deposit	B	32,–	16,–	48,–
Drip Tray	B	50,–	16,–	66,–
LPW 200-3, painted	B	878,–	274,–	1152,–
Tool Deposit	B	32,–	16,–	48,–
Drip Tray	B	50,–	16,–	66,–
LPW 200-3, hot-dip galvanized	B	914,–	274,–	1188,–
Tool Deposit	B	32,–	16,–	48,–
Drip Tray	B	50,–	16,–	66,–
LPW 200-4, painted	B	1055,–	274,–	1329,–
LPW 200-4, hot-dip galvanized	B	1086,–	274,–	1360,–

Modular Sump Tray Type MAW	Category	Price	Freight charges	Price including freight charges
MAW, painted	B	336,–	192,–	528,–
MAW, hot-dip galvanized	B	366,–	192,–	558,–
Element No. 1: grid grate incl. supporTS, painted	B	78,–	54,–	132,–
Element No. 2: galvanized handle + castors	B	138,–	19,–	157,–
Element No. 3: runners, painted	B	103,–	15,–	118,–
Element No. 3: runners, hot-dip galvanized	B	66,–	15,–	81,–
Element No. 6: surround, galvanized	B	601,–	192,–	793,–

Prices in EUR, valid EXW DE-46354 Südlohn, DE-38820 Halberstadt, unpacked
Freight charges valid CPT Great Britain, islands & the following post code areas excluded: IC, ZE

BAUER GmbH
Eichendorffstr. 62
46354 Südlohn, Germany

Tel. +49 2862 70 90
info@bauer-suedlohn.com
www.bauer-suedlohn.com

Geschäftsführer
Patrick Bauer, Pascal Bauer
Amtsgericht Coesfeld HRB 5259

TÜVNORD
TÜV NORD CERT GmbH
DIN EN ISO 9001
tuev-nord.de

Price List 0726 en-GB
Environment / Storage

Spline Sump Type PW	Category	Price	Freight charges	Price including freight charges
PW 200-2, painted	B	245,–	192,–	437,–
PW 200-2, hot-dip galvanized	B	235,–	192,–	427,–
PW 200-4, painted	B	271,–	192,–	463,–
PW 200-4, hot-dip galvanized	B	261,–	192,–	453,–
PW 400-4, painted	B	349,–	192,–	541,–
PW 400-4, hot-dip galvanized	B	332,–	192,–	524,–

Spline Sump Type PWE	Category	Price	Freight charges	Price including freight charges
PWE 200-2, painted	B	217,–	192,–	409,–
PWE 200-2, hot-dip galvanized	B	207,–	192,–	399,–
PWE 200-4, painted	B	236,–	192,–	428,–
PWE 200-4, hot-dip galvanized	B	228,–	192,–	420,–
PWE 400-4, painted	B	288,–	192,–	480,–
PWE 400-4, hot-dip galvanized	B	278,–	192,–	470,–

Hazardous Materials Cabinet with Roller Shutter Door Type RSG	Category	Price	Freight charges	Price including freight charges
RSG-1, painted	B	1906,–	274,–	2180,–
Set of 4 Feet, height adjustable	B	80,–	9,–	89,–
RSG-2, painted	B	1920,–	274,–	2194,–
Set of 4 Feet, height adjustable	B	80,–	9,–	89,–
RSG-3, painted	B	1971,–	274,–	2245,–
Set of 4 Feet, height adjustable	B	80,–	9,–	89,–
RSG-4, painted	B	2109,–	383,–	2492,–
Set of 4 Feet, height adjustable	B	80,–	9,–	89,–

Shelf Sump with Polyethylene Inlay Type RW PE	Category	Price	Freight charges	Price including freight charges
RW 1800 PE, painted	B	1044,–	274,–	1318,–
RW 1800 PE, hot-dip galvanized	B	1100,–	274,–	1374,–
RW 2200-1 PE, painted	B	1089,–	274,–	1363,–
RW 2200-1 PE, hot-dip galvanized	B	1147,–	274,–	1421,–
RW 2200-2 PE, painted	B	1276,–	274,–	1550,–
RW 2200-2 PE, hot-dip galvanized	B	1341,–	274,–	1615,–
RW 2700-1 PE, painted	B	1108,–	327,–	1435,–
RW 2700-1 PE, hot-dip galvanized	B	1192,–	327,–	1519,–
RW 2700-2 PE, painted	B	1266,–	327,–	1593,–
RW 2700-2 PE, hot-dip galvanized	B	1365,–	327,–	1692,–
RW 2700-3 PE, painted	B	1466,–	327,–	1793,–
RW 2700-3 PE, hot-dip galvanized	B	1592,–	327,–	1919,–
RW 3300-1 PE, painted	B	1417,–	327,–	1744,–
RW 3300-1 PE, hot-dip galvanized	B	1510,–	327,–	1837,–
RW 3300-2 PE, painted	B	1535,–	327,–	1862,–
RW 3300-2 PE, hot-dip galvanized	B	1637,–	327,–	1964,–
RW 3300-3 PE, painted	B	1738,–	436,–	2174,–
RW 3300-3 PE, hot-dip galvanized	B	1850,–	436,–	2286,–

Prices in EUR, valid EXW DE-46354 Südlohn, DE-38820 Halberstadt, unpacked
Freight charges valid CPT Great Britain, islands & the following post code areas excluded: IC, ZE

BAUER GmbH
Eichendorffstr. 62
46354 Südlohn, Germany

Tel. +49 2862 70 90
info@bauer-suedlohn.com
www.bauer-suedlohn.com

Geschäftsführer
Patrick Bauer, Pascal Bauer
Amtsgericht Coesfeld HRB 5259

TÜVNORD
TÜV NORD CERT GmbH
DIN EN ISO 9001
tuev-nord.de

Price List 0726 en-GB
Environment / Storage

Shelf Sump Type RW	Category	Price	Freight charges	Price including freight charges
RW 1800, painted	B	507,–	192,–	699,–
RW 1800, hot-dip galvanized	B	561,–	192,–	753,–
RW 2200-1, painted	B	519,–	192,–	711,–
RW 2200-1, hot-dip galvanized	B	577,–	192,–	769,–
RW 2200-2, painted	B	532,–	274,–	806,–
RW 2200-2, hot-dip galvanized	B	597,–	274,–	871,–
RW 2700-1, painted	B	528,–	327,–	855,–
RW 2700-1, hot-dip galvanized	B	611,–	327,–	938,–
RW 2700-2, painted	B	607,–	327,–	934,–
RW 2700-2, hot-dip galvanized	B	706,–	327,–	1033,–
RW 2700-3, painted	B	657,–	327,–	984,–
RW 2700-3, hot-dip galvanized	B	781,–	327,–	1108,–
RW 3300-1, painted	B	680,–	327,–	1007,–
RW 3300-1, hot-dip galvanized	B	774,–	327,–	1101,–
RW 3300-2, painted	B	748,–	327,–	1075,–
RW 3300-2, hot-dip galvanized	B	850,–	327,–	1177,–
RW 3300-3, painted	B	834,–	327,–	1161,–
RW 3300-3, hot-dip galvanized	B	945,–	327,–	1272,–

Shelf Sump with Polyethylene Inlay Type RW-GR PE	Category	Price	Freight charges	Price including freight charges
RW-GR 1800 PE, painted	B	1178,–	274,–	1452,–
RW-GR 1800 PE, hot-dip galvanized	B	1231,–	274,–	1505,–
RW-GR 2200-1 PE, painted	B	1255,–	274,–	1529,–
RW-GR 2200-1 PE, hot-dip galvanized	B	1313,–	274,–	1587,–
RW-GR 2200-2 PE, painted	B	1443,–	383,–	1826,–
RW-GR 2200-2 PE, hot-dip galvanized	B	1505,–	383,–	1888,–
RW-GR 2700-1 PE, painted	B	1313,–	436,–	1749,–
RW-GR 2700-1 PE, hot-dip galvanized	B	1395,–	436,–	1831,–
RW-GR 2700-2 PE, painted	B	1469,–	436,–	1905,–
RW-GR 2700-2 PE, hot-dip galvanized	B	1570,–	436,–	2006,–
RW-GR 2700-3 PE, painted	B	1671,–	436,–	2107,–
RW-GR 2700-3 PE, hot-dip galvanized	B	1776,–	436,–	2212,–
RW-GR 3300-1 PE, painted	B	1790,–	436,–	2226,–
RW-GR 3300-1 PE, hot-dip galvanized	B	1882,–	436,–	2318,–
RW-GR 3300-2 PE, painted	B	1906,–	436,–	2342,–
RW-GR 3300-2 PE, hot-dip galvanized	B	2018,–	436,–	2454,–
RW-GR 3300-3 PE, painted	B	2110,–	512,–	2622,–
RW-GR 3300-3 PE, hot-dip galvanized	B	2222,–	512,–	2734,–
RW-GR 3600-3 PE, painted	B	2428,–	523,–	2951,–
RW-GR 3600-3 PE, hot-dip galvanized	B	2580,–	523,–	3103,–

Shelf Sump Type RW-GR	Category	Price	Freight charges	Price including freight charges
RW-GR 1800, painted	B	641,–	274,–	915,–
RW-GR 1800, hot-dip galvanized	B	696,–	274,–	970,–
RW-GR 2200-1, painted	B	686,–	274,–	960,–

Prices in EUR, valid EXW DE-46354 Südlohn, DE-38820 Halberstadt, unpacked
Freight charges valid CPT Great Britain, islands & the following post code areas excluded: IC, ZE

BAUER GmbH
Eichendorffstr. 62
46354 Südlohn, Germany

Tel. +49 2862 70 90
info@bauer-suedlohn.com
www.bauer-suedlohn.com

Geschäftsführer
Patrick Bauer, Pascal Bauer
Amtsgericht Coesfeld HRB 5259

TÜVNORD
TÜV NORD CERT GmbH
DIN EN ISO 9001
tuev-nord.de

Price List 0726 en-GB
Environment / Storage

Shelf Sump Type RW-GR	Category	Price	Freight charges	Price including freight charges
RW-GR 2200-1, hot-dip galvanized	B	745,–	274,–	1019,–
RW-GR 2200-2, painted	B	700,–	383,–	1083,–
RW-GR 2200-2, hot-dip galvanized	B	761,–	383,–	1144,–
RW-GR 2700-1, painted	B	732,–	327,–	1059,–
RW-GR 2700-1, hot-dip galvanized	B	815,–	436,–	1251,–
RW-GR 2700-2, painted	B	811,–	436,–	1247,–
RW-GR 2700-2, hot-dip galvanized	B	911,–	436,–	1347,–
RW-GR 2700-3, painted	B	861,–	436,–	1297,–
RW-GR 2700-3, hot-dip galvanized	B	966,–	436,–	1402,–
RW-GR 3300-1, painted	B	1052,–	436,–	1488,–
RW-GR 3300-1, hot-dip galvanized	B	1146,–	436,–	1582,–
RW-GR 3300-2, painted	B	1119,–	436,–	1555,–
RW-GR 3300-2, hot-dip galvanized	B	1230,–	436,–	1666,–
RW-GR 3300-3, painted	B	1206,–	436,–	1642,–
RW-GR 3300-3, hot-dip galvanized	B	1317,–	436,–	1753,–
RW-GR 3600-3, painted	B	1330,–	436,–	1766,–
RW-GR 3600-3, hot-dip galvanized	B	1483,–	436,–	1919,–

Safety Cabinet Type SIW	Category	Price	Freight charges	Price including freight charges
SIW 1005	B	596,–	192,–	788,–
SIW 2005	B	751,–	274,–	1025,–

Diesel Filling Point Type TAW	Category	Price	Freight charges	Price including freight charges
TAW 1, painted	B	2448,–	on request	on request
TAW 2, painted	B	3195,–	on request	on request
TAW 3, painted	B	4603,–	on request	on request

Environmental Shelve Type UR	Category	Price	Freight charges	Price including freight charges
UR-G 2200, painted	B	1827,–	440,–	2267,–
Grid Set, hot-dip galvanized	B	198,–	157,–	355,–
Crash Guard	B	75,–	9,–	84,–
UR-G 2700, painted	B	1968,–	440,–	2408,–
Grid Set, hot-dip galvanized	B	245,–	157,–	402,–
Crash Guard	B	75,–	9,–	84,–
UR-G 3300, painted	B	2749,–	512,–	3261,–
Grid Set, hot-dip galvanized	B	297,–	157,–	454,–
Crash Guard	B	75,–	9,–	84,–
UR-A 2200, painted	B	1395,–	440,–	1835,–
Grid Set, hot-dip galvanized	B	198,–	157,–	355,–
Crash Guard	B	75,–	9,–	84,–
UR-A 2700, painted	B	1535,–	440,–	1975,–
Grid Set, hot-dip galvanized	B	245,–	157,–	402,–
Crash Guard	B	75,–	9,–	84,–
UR-A 3300, painted	B	2317,–	512,–	2829,–
Grid Set, hot-dip galvanized	B	297,–	157,–	454,–

Prices in EUR, valid EXW DE-46354 Südlohn, DE-38820 Halberstadt, unpacked
Freight charges valid CPT Great Britain, islands & the following post code areas excluded: IC, ZE

BAUER GmbH
Eichendorffstr. 62
46354 Südlohn, Germany

Tel. +49 2862 70 90
info@bauer-suedlohn.com
www.bauer-suedlohn.com

Geschäftsführer
Patrick Bauer, Pascal Bauer
Amtsgericht Coesfeld HRB 5259

TÜVNORD
TÜV NORD CERT GmbH
DIN EN ISO 9001
tuev-nord.de

Price List 0726 en-GB
Environment / Storage

Environmental Shelve Type UR	Category	Price	Freight charges	Price including freight charges
Crash Guard	B	75,–	9,–	84,–

Stainless Steel Sump Tray Type VAW	Category	Price	Freight charges	Price including freight charges
VAW-1, stainless steel 1.4571	B	990,–	192,–	1182,–
Grid, stainless steel 1.4571	B	494,–	14,–	508,–
Grid, hot-dip galvanized	B	71,–	14,–	85,–
VAW-2, stainless steel 1.4571	B	1079,–	192,–	1271,–
Grid, stainless steel 1.4571	B	731,–	16,–	747,–
Grid, hot-dip galvanized	B	95,–	39,–	134,–
VAW-4/A, stainless steel 1.4571	B	1236,–	192,–	1428,–
Grid, stainless steel 1.4571	B	1061,–	22,–	1083,–
Grid, hot-dip galvanized	B	124,–	22,–	146,–
VAW-4/B, stainless steel 1.4571	B	1511,–	192,–	1703,–
Grid, stainless steel 1.4571	B	1461,–	27,–	1488,–
Grid, hot-dip galvanized	B	169,–	27,–	196,–
VAW 1000 (Stainless Steel Grid), stainless steel 1.4571	B	3909,–	302,–	4211,–
VAW 1000 (Hot-dip Galvanized Grid), stainless steel 1.4571	B	2868,–	302,–	3170,–
VAW 1000-2 (Stainless Steel Grid), stainless steel 1.4571	B	5472,–	484,–	5956,–
VAW 1000-2 (Hot-dip Galvanized Grid), stainless steel 1.4571	B	3561,–	484,–	4045,–

Heating Chamber Type WK	Category	Price	Freight charges	Price including freight charges
WK 29-2 E65, painted	C	30688,–	on request	on request
WK 29-2 E85, painted	C	30859,–	on request	on request
WK 57-2 E65, painted	C	43080,–	on request	on request
WK 57-2 E85, painted	C	45540,–	on request	on request

Sump Tray Type WM	Category	Price	Freight charges	Price including freight charges
WM-2/200, hot-dip galvanized	B	290,–	192,–	482,–
Drum Support FA 60-1, hot-dip galvanized	B	109,–	15,–	124,–
Drum Support FA 60-2, hot-dip galvanized	B	118,–	18,–	136,–
Drum Support FA 60-3, hot-dip galvanized	B	138,–	21,–	159,–
Drum Support FA 200-1, hot-dip galvanized	B	118,–	15,–	133,–
Can Shelf Type GR-A, galvanized	B	138,–	39,–	177,–
Can Shelf Type GR-B, galvanized	B	138,–	39,–	177,–
Can Shelf Type GR-C, galvanized	B	138,–	39,–	177,–
WM-4/200, hot-dip galvanized	B	330,–	192,–	522,–
Drum Support FA 60-1, hot-dip galvanized	B	109,–	15,–	124,–
Drum Support FA 60-2, hot-dip galvanized	B	118,–	18,–	136,–
Drum Support FA 60-3, hot-dip galvanized	B	138,–	21,–	159,–
Drum Support FA 200-1, hot-dip galvanized	B	118,–	15,–	133,–
Drum Support FA 200-2, hot-dip galvanized	B	138,–	22,–	160,–
Can Shelf Type GR-A, galvanized	B	138,–	39,–	177,–
Can Shelf Type GR-B, galvanized	B	138,–	39,–	177,–
Can Shelf Type GR-C, galvanized	B	138,–	39,–	177,–
WM-4/400, hot-dip galvanized	B	396,–	274,–	670,–

Prices in EUR, valid EXW DE-46354 Südlohn, DE-38820 Halberstadt, unpacked
Freight charges valid CPT Great Britain, islands & the following post code areas excluded: IC, ZE

BAUER GmbH
Eichendorffstr. 62
46354 Südlohn, Germany

Tel. +49 2862 70 90
info@bauer-suedlohn.com
www.bauer-suedlohn.com

Geschäftsführer
Patrick Bauer, Pascal Bauer
Amtsgericht Coesfeld HRB 5259

TÜVNORD
TÜV NORD CERT GmbH
DIN EN ISO 9001
tuev-nord.de

Price List 0726 en-GB
Environment / Storage

Sump Tray Type WO	Category	Price	Freight charges	Price including freight charges
WO-2/200, hot-dip galvanized	B	221,–	192,–	413,–
WO-4/200, hot-dip galvanized	B	240,–	192,–	432,–
WO-4/400, hot-dip galvanized	B	309,–	192,–	501,–

Polyethylene Sump Pallet Type WP	Category	Price	Freight charges	Price including freight charges
WP 1/11, made of robust polyethylene	B	1089,–	192,–	1281,–
WP 2/11, made of robust polyethylene	B	1377,–	192,–	1569,–
Dispensing Tray VB 2, robust polyethylene, blue	B	158,–	39,–	197,–

Polyethylene Sump Pallet Type WPA-PE	Category	Price	Freight charges	Price including freight charges
WPA-PE 2/2, made of robust polyethylene	B	324,–	192,–	516,–
WPA-PE 4/2, made of robust polyethylene	B	512,–	192,–	704,–

Polyethylene Sump Pallet Type WP-PE	Category	Price	Freight charges	Price including freight charges
WP-PE 1/11, made of robust polyethylene	B	1179,–	192,–	1371,–
Dispensing Tray VB 1, robust polyethylene, blue	B	169,–	39,–	208,–
WP-PE 2/11, made of robust polyethylene	B	1560,–	327,–	1887,–
Dispensing Tray VB 2, robust polyethylene, blue	B	158,–	39,–	197,–
WP-PE 2/2, made of robust polyethylene	B	301,–	192,–	493,–
WP-PE 4/2, made of robust polyethylene	B	469,–	192,–	661,–
WP-PE 4/4, made of robust polyethylene	B	487,–	192,–	679,–
WP-PE 8/11, made of robust polyethylene	B	1560,–	327,–	1887,–

Mobile Polyethylene Sump Tray Type WPT	Category	Price	Freight charges	Price including freight charges
WPT 230, made of robust polyethylene	B	538,–	192,–	730,–

Prices in EUR, valid EXW DE-46354 Südlohn, DE-38820 Halberstadt, unpacked
Freight charges valid CPT Great Britain, islands & the following post code areas excluded: IC, ZE

BAUER GmbH
Eichendorffstr. 62
46354 Südlohn, Germany

Tel. +49 2862 70 90
info@bauer-suedlohn.com
www.bauer-suedlohn.com

Geschäftsführer
Patrick Bauer, Pascal Bauer
Amtsgericht Coesfeld HRB 5259

TÜVNORD
TÜV NORD CERT GmbH
DIN EN ISO 9001
tuev-nord.de

Price List 0726 en-GB
Hazardous Materials Containers

Fluorescent Tube Box Type AL-D	Category	Price	Freight charges	Price including freight charges
AL-D 150, aluminium	C	518,–	192,–	710,–
AL-D 200, aluminium	C	571,–	192,–	763,–

Collecting Container Type ASB	Category	Price	Freight charges	Price including freight charges
ASB 250, hot-dip galvanized	C	2038,–	383,–	2421,–
ASB 450-I, hot-dip galvanized	C	2155,–	383,–	2538,–

Special Waste Container Type ASK	Category	Price	Freight charges	Price including freight charges
ASK 540-4, hot-dip galvanized	C	on request	on request	on request

Duo-Container Type DC	Category	Price	Freight charges	Price including freight charges
DC 450, hot-dip galvanized	C	2347,–	on request	on request
Stainless steel strainer	D	118,–	9,–	127,–
Wing nut spanner for M12, hot-dip galvanized	F	35,–	15,–	50,–
DC 1000, hot-dip galvanized	C	2493,–	on request	on request
Stainless steel strainer	D	118,–	9,–	127,–
Wing nut spanner for M12, hot-dip galvanized	F	35,–	15,–	50,–

Lithium-Ion Storage Container Type LIL	Category	Price	Freight charges	Price including freight charges
LIL 30, hot-dip galvanized	B	1937,–	192,–	2129,–
LIL 90, hot-dip galvanized	B	2816,–	274,–	3090,–
Castor Set, polyamide, Load capacity 1050 kg / castor set	A	156,–	15,–	171,–
LIL 220, hot-dip galvanized	B	4864,–	383,–	5247,–
Castor Set, polyamide, Load capacity 1050 kg / castor set	A	156,–	15,–	171,–
LIL 280, hot-dip galvanized	B	5884,–	383,–	6267,–
Castor Set, polyamide, Load capacity 1050 kg / castor set	A	156,–	15,–	171,–
LIL 340, hot-dip galvanized	B	6792,–	383,–	7175,–
Castor Set, polyamide, Load capacity 1050 kg / castor set	A	156,–	15,–	171,–

MobiCont Type M 800	Category	Price	Freight charges	Price including freight charges
M 800, painted	C	1389,–	383,–	1772,–
Level Indicator	C	220,–	9,–	229,–
Funnel for filling, PP	D	68,–	9,–	77,–
Filling/Extraction lid	C	68,–	9,–	77,–
Lid, galvanized, without a lock	C	195,–	15,–	210,–
Lid, galvanized, with square lock	C	242,–	18,–	260,–
Lid, galvanized, with cylinder lock	C	242,–	18,–	260,–
Castor Set, polyamide, Load capacity 1350 kg / castor set	A	192,–	15,–	207,–
Hand Pump K 10 C, connects to drum thread, suitable for fuels and heating fuel	C	95,–	14,–	109,–
Hose Kit (1.5 m) for Hand Pump Type K 10 C, suitable for diesel and fuel	C	68,–	14,–	82,–
Hose Kit (3 m) for Hand Pump Type K 10 C, suitable for diesel and fuel	C	96,–	15,–	111,–

Prices in EUR, valid EXW DE-46354 Südlohn, DE-38820 Halberstadt, unpacked
Freight charges valid CPT Great Britain, islands & the following post code areas excluded: IC, ZE

BAUER GmbH
Eichendorffstr. 62
46354 Südlohn, Germany

Tel. +49 2862 70 90
info@bauer-suedlohn.com
www.bauer-suedlohn.com

Geschäftsführer
Patrick Bauer, Pascal Bauer
Amtsgericht Coesfeld HRB 5259

TÜVNORD
TÜV NORD CERT GmbH
DIN EN ISO 9001
tuev-nord.de

Price List 0726 en-GB
Hazardous Materials Containers

MobiCont Type M 800	Category	Price	Freight charges	Price including freight charges
Hose Kit (4 m) for Hand Pump Type K 10 C, suitable for diesel and fuel	C	109,–	15,–	124,–
Electric Pump TecPump 400 DC 12V	C	510,–	15,–	525,–
Electric Pump TecPump 400 DC 24V	C	510,–	15,–	525,–
Electric Pump TecPump 600 AC 230V	C	510,–	15,–	525,–
M 800, hot-dip galvanized	C	1483,–	383,–	1866,–
Level Indicator	C	220,–	9,–	229,–
Funnel for filling, PP	D	68,–	9,–	77,–
Filling/Extraction lid	C	68,–	9,–	77,–
Lid, galvanized, without a lock	C	195,–	15,–	210,–
Lid, galvanized, with square lock	C	242,–	18,–	260,–
Lid, galvanized, with cylinder lock	C	242,–	18,–	260,–
Castor Set, polyamide, Load capacity 1350 kg / castor set	A	192,–	15,–	207,–
Hand Pump K 10 C, connects to drum thread, suitable for fuels and heating fuel	C	95,–	14,–	109,–
Hose Kit (1.5 m) for Hand Pump Type K 10 C, suitable for diesel and fuel	C	68,–	14,–	82,–
Hose Kit (3 m) for Hand Pump Type K 10 C, suitable for diesel and fuel	C	96,–	15,–	111,–
Hose Kit (4 m) for Hand Pump Type K 10 C, suitable for diesel and fuel	C	109,–	15,–	124,–
Electric Pump TecPump 400 DC 12V	C	510,–	15,–	525,–
Electric Pump TecPump 400 DC 24V	C	510,–	15,–	525,–
Electric Pump TecPump 600 AC 230V	C	510,–	15,–	525,–

MobiCont Type MD	Category	Price	Freight charges	Price including freight charges
MD 800, painted	C	1934,–	383,–	2317,–
Level Indicator	C	220,–	9,–	229,–
Hand Pump K 10 C, connects to drum thread, suitable for fuels and heating fuel	C	95,–	14,–	109,–
Hose Kit (1.5 m) for Hand Pump Type K 10 C, suitable for diesel and fuel	C	68,–	14,–	82,–
Hose Kit (3 m) for Hand Pump Type K 10 C, suitable for diesel and fuel	C	96,–	15,–	111,–
Hose Kit (4 m) for Hand Pump Type K 10 C, suitable for diesel and fuel	C	109,–	15,–	124,–
Electric Pump TecPump 400 DC 12V	C	510,–	15,–	525,–
Electric Pump TecPump 400 DC 24V	C	510,–	15,–	525,–
Electric Pump TecPump 600 AC 230V	C	510,–	15,–	525,–
MD 800, hot-dip galvanized	C	2025,–	383,–	2408,–
Level Indicator	C	220,–	9,–	229,–
Hand Pump K 10 C, connects to drum thread, suitable for fuels and heating fuel	C	95,–	14,–	109,–
Hose Kit (1.5 m) for Hand Pump Type K 10 C, suitable for diesel and fuel	C	68,–	14,–	82,–
Hose Kit (3 m) for Hand Pump Type K 10 C, suitable for diesel and fuel	C	96,–	15,–	111,–
Hose Kit (4 m) for Hand Pump Type K 10 C, suitable for diesel and fuel	C	109,–	15,–	124,–
Electric Pump TecPump 400 DC 12V	C	510,–	15,–	525,–
Electric Pump TecPump 400 DC 24V	C	510,–	15,–	525,–
Electric Pump TecPump 600 AC 230V	C	510,–	15,–	525,–

MobiCont Type MO	Category	Price	Freight charges	Price including freight charges
MO 800, painted	C	on request	on request	on request
Level Indicator	C	220,–	9,–	229,–
MO 800, hot-dip galvanized	C	on request	on request	on request
Level Indicator	C	220,–	9,–	229,–

Prices in EUR, valid EXW DE-46354 Südlohn, DE-38820 Halberstadt, unpacked
Freight charges valid CPT Great Britain, islands & the following post code areas excluded: IC, ZE

BAUER GmbH
Eichendorffstr. 62
46354 Südlohn, Germany

Tel. +49 2862 70 90
info@bauer-suedlohn.com
www.bauer-suedlohn.com

Geschäftsführer
Patrick Bauer, Pascal Bauer
Amtsgericht Coesfeld HRB 5259

TÜVNORD
TÜV NORD CERT GmbH
DIN EN ISO 9001
tuev-nord.de

Price List 0726 en-GB
Hazardous Materials Containers

Fuel Container Type MT	Category	Price	Freight charges	Price including freight charges
MT 450, hot-dip galvanized	C	2223,–	383,–	2606,–
Level Indicator	C	220,–	9,–	229,–
Hand Pump K 10 C, connects to drum thread, suitable for fuels and heating fuel	C	95,–	14,–	109,–
Digital Flow Counter FMT 3 with screwed joints	C	320,–	9,–	329,–
Electric Pump TecPump 400 DC 12V	C	510,–	12,–	522,–
Electric Pump TecPump 400 DC 24V	C	510,–	12,–	522,–
Electric Pump TecPump 600 AC 230V	C	510,–	12,–	522,–
Counter Z 400, Retrofit Kit for Electric Pumps TecPump 400 DC 12V, 400 DC 24V and 600 AC 230V	C	159,–	9,–	168,–
MT 600, hot-dip galvanized	C	2644,–	383,–	3027,–
Level Indicator	C	220,–	9,–	229,–
Hand Pump K 10 C, connects to drum thread, suitable for fuels and heating fuel	C	95,–	14,–	109,–
Digital Flow Counter FMT 3 with screwed joints	C	320,–	9,–	329,–
Electric Pump TecPump 400 DC 12V	C	510,–	12,–	522,–
Electric Pump TecPump 400 DC 24V	C	510,–	12,–	522,–
Electric Pump TecPump 600 AC 230V	C	510,–	12,–	522,–
Counter Z 400, Retrofit Kit for Electric Pumps TecPump 400 DC 12V, 400 DC 24V and 600 AC 230V	C	159,–	9,–	168,–
MT 1000, hot-dip galvanized	C	2858,–	459,–	3317,–
Level Indicator	C	220,–	9,–	229,–
Hand Pump K 10 C, connects to drum thread, suitable for fuels and heating fuel	C	95,–	14,–	109,–
Digital Flow Counter FMT 3 with screwed joints	C	320,–	9,–	329,–
Electric Pump TecPump 400 DC 12V	C	510,–	12,–	522,–
Electric Pump TecPump 400 DC 24V	C	510,–	12,–	522,–
Electric Pump TecPump 600 AC 230V	C	510,–	12,–	522,–
Counter Z 400, Retrofit Kit for Electric Pumps TecPump 400 DC 12V, 400 DC 24V and 600 AC 230V	C	159,–	9,–	168,–

MobiCont Type MW	Category	Price	Freight charges	Price including freight charges
MW 800, painted	C	1783,–	383,–	2166,–
Level Indicator	C	220,–	9,–	229,–
Filling coupling	C	53,–	8,–	61,–
Tank heating, 220 W	C	384,–	12,–	396,–
Tank fitting	B	67,–	9,–	76,–
Anti-siphon valve	D	71,–	8,–	79,–
Aeration/Vent valve	C	27,–	8,–	35,–
MW 800, hot-dip galvanized	C	1877,–	383,–	2260,–
Level Indicator	C	220,–	9,–	229,–
Filling coupling	C	53,–	8,–	61,–
Tank heating, 220 W	C	384,–	12,–	396,–
Tank fitting	B	67,–	9,–	76,–
Anti-siphon valve	D	71,–	8,–	79,–
Aeration/Vent valve	C	27,–	8,–	35,–

Special Waste Container Type SAF	Category	Price	Freight charges	Price including freight charges
SAF 450, hot-dip galvanized	C	1136,–	on request	on request
SAF 600, hot-dip galvanized	C	1136,–	on request	on request
SAF 1000, hot-dip galvanized	C	1136,–	on request	on request

Prices in EUR, valid EXW DE-46354 Südlohn, DE-38820 Halberstadt, unpacked
Freight charges valid CPT Great Britain, islands & the following post code areas excluded: IC, ZE

BAUER GmbH
Eichendorffstr. 62
46354 Südlohn, Germany

Tel. +49 2862 70 90
info@bauer-suedlohn.com
www.bauer-suedlohn.com

Geschäftsführer
Patrick Bauer, Pascal Bauer
Amtsgericht Coesfeld HRB 5259

TÜVNORD
TÜV NORD CERT GmbH
DIN EN ISO 9001
tuev-nord.de

Price List 0726 en-GB
Hazardous Materials Containers

Large Salvage Packaging Type SAG	Category	Price	Freight charges	Price including freight charges
SAG 800, hot-dip galvanized	C	1141,–	383,–	1524,–
SAG 1500, hot-dip galvanized	C	2151,–	on request	on request
Polyethylene sacks, 25 pieces on roll	C	187,–	76,–	263,–
SAG 2100, hot-dip galvanized	C	2257,–	on request	on request
Polyethylene sacks, 25 pieces on roll	C	187,–	76,–	263,–
SAG 2700, hot-dip galvanized	C	2331,–	on request	on request
Polyethylene sacks, 25 pieces on roll	C	187,–	76,–	263,–

Special Waste Container Type SAP	Category	Price	Freight charges	Price including freight charges
SAP 450, hot-dip galvanized	C	953,–	on request	on request
Polyethylene sacks, 50 pieces on roll - 0,085 mm	C	139,–	97,–	236,–
Polyethylene sacks, 50 pieces on roll - 0,16 mm	C	246,–	157,–	403,–
SAP 600, hot-dip galvanized	C	953,–	on request	on request
Polyethylene sacks, 50 pieces on roll - 0,085 mm	C	139,–	97,–	236,–
Polyethylene sacks, 50 pieces on roll - 0,16 mm	C	246,–	157,–	403,–
SAP 800, hot-dip galvanized	C	953,–	on request	on request
Polyethylene sacks, 50 pieces on roll - 0,085 mm	C	139,–	97,–	236,–
Polyethylene sacks, 50 pieces on roll - 0,16 mm	C	246,–	157,–	403,–

Special Waste Container Type SAP-1	Category	Price	Freight charges	Price including freight charges
SAP 450-1, hot-dip galvanized	C	891,–	on request	on request
Polyethylene sacks, 50 pieces on roll - 0,085 mm	C	139,–	97,–	236,–
Polyethylene sacks, 50 pieces on roll - 0,16 mm	C	246,–	157,–	403,–
SAP 600-1, hot-dip galvanized	C	891,–	on request	on request
Polyethylene sacks, 50 pieces on roll - 0,085 mm	C	139,–	97,–	236,–
Polyethylene sacks, 50 pieces on roll - 0,16 mm	C	246,–	157,–	403,–
SAP 800-1, hot-dip galvanized	C	891,–	on request	on request
Polyethylene sacks, 50 pieces on roll - 0,085 mm	C	139,–	97,–	236,–
Polyethylene sacks, 50 pieces on roll - 0,16 mm	C	246,–	157,–	403,–
SAP 800-3, hot-dip galvanized	C	874,–	on request	on request
Polyethylene sacks, 50 pieces on roll - 0,085 mm	C	139,–	97,–	236,–
Polyethylene sacks, 50 pieces on roll - 0,16 mm	C	246,–	157,–	403,–

Used Battery Container Type SAP 600 K	Category	Price	Freight charges	Price including freight charges
SAP 600 K, hot-dip galvanized	C	1286,–	on request	on request

Used Battery Container Type SAP 601 K	Category	Price	Freight charges	Price including freight charges
SAP 601 K, hot-dip galvanized	C	1141,–	on request	on request

Special Waste Container Type SAS	Category	Price	Freight charges	Price including freight charges
SAS 800, hot-dip galvanized	C	963,–	on request	on request

Hazardous Materials Container Type SF	Category	Price	Freight charges	Price including freight charges
SF 240, hot-dip galvanized	C	on request	on request	on request

Prices in EUR, valid EXW DE-46354 Südlohn, DE-38820 Halberstadt, unpacked
Freight charges valid CPT Great Britain, islands & the following post code areas excluded: IC, ZE

BAUER GmbH
Eichendorffstr. 62
46354 Südlohn, Germany

Tel. +49 2862 70 90
info@bauer-suedlohn.com
www.bauer-suedlohn.com

Geschäftsführer
Patrick Bauer, Pascal Bauer
Amtsgericht Coesfeld HRB 5259

TÜVNORD
TÜV NORD CERT GmbH
DIN EN ISO 9001
tuev-nord.de

Price List 0726 en-GB
Hazardous Materials Containers

Fluorescent Tube Box Type SL	Category	Price	Freight charges	Price including freight charges
SL 150, painted	C	688,–	274,–	962,–
SL 150, hot-dip galvanized	C	822,–	274,–	1096,–
SL 200, painted	C	766,–	274,–	1040,–
SL 200, hot-dip galvanized	C	902,–	383,–	1285,–

Fluorescent Tube Box Type SL-D	Category	Price	Freight charges	Price including freight charges
SL-D 150, painted	C	757,–	274,–	1031,–
Removable Tray, galvanized	C	87,–	10,–	97,–
SL-D 150, hot-dip galvanized	C	880,–	274,–	1154,–
Removable Tray, galvanized	C	87,–	10,–	97,–
SL-D 200, painted	C	837,–	274,–	1111,–
Removable Tray, galvanized	C	87,–	10,–	97,–
SL-D 200, hot-dip galvanized	C	973,–	274,–	1247,–
Removable Tray, galvanized	C	87,–	10,–	97,–

Fluorescent Tube Box Type SL-N	Category	Price	Freight charges	Price including freight charges
SL-N 220, painted	C	861,–	274,–	1135,–
SL-N 220, hot-dip galvanized	C	1003,–	274,–	1277,–

Special Waste Container Type SP	Category	Price	Freight charges	Price including freight charges
SP 100, hot-dip galvanized	C	on request	on request	on request
SP 240, hot-dip galvanized	C	on request	on request	on request

Transport Box for Aerosol Cans Type STB	Category	Price	Freight charges	Price including freight charges
STB 1000, hot-dip galvanized	C	1158,–	on request	on request
Polyethylene sacks, 50 pieces on roll	C	192,–	97,–	289,–
Absorbent felt, 100 pieces	C	366,–	74,–	440,–

Prices in EUR, valid EXW DE-46354 Südlohn, DE-38820 Halberstadt, unpacked
Freight charges valid CPT Great Britain, islands & the following post code areas excluded: IC, ZE

BAUER GmbH
Eichendorffstr. 62
46354 Südlohn, Germany

Tel. +49 2862 70 90
info@bauer-suedlohn.com
www.bauer-suedlohn.com

Geschäftsführer
Patrick Bauer, Pascal Bauer
Amtsgericht Coesfeld HRB 5259

TÜVNORD
TÜV NORD CERT GmbH
DIN EN ISO 9001
tuev-nord.de