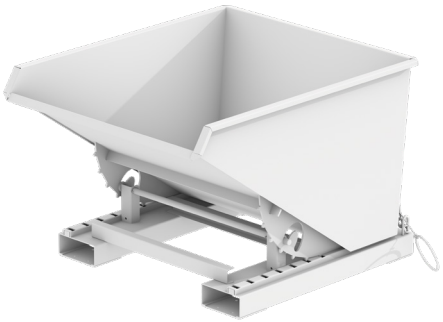

PRICE LIST 0726 EN-NO

FORKLIFT TRUCK ATTACHMENTS

WORKSPACE MATERIAL HANDLING

ENVIRONMENT / STORAGE

HAZARDOUS MATERIALS CONTAINERS

INNOVATION – CONSTRUCTION – PRODUCTION

. . . since 1966

Price List 0726 en-NO
Forklift Truck Attachments

Drum Gripper Type 3P	Category	Price	Freight charges	Price including freight charges
3P, painted	B	942,–	182,–	1124,–
3P, hot-dip galvanized	B	990,–	182,–	1172,–

Tilting Container Type 3S	Category	Price	Freight charges	Price including freight charges
3S 300, painted	A	1244,–	266,–	1510,–
Lid, galvanized	A	174,–	18,–	192,–
Castor Set, polyamide, Load capacity 1050 kg / castor set	A	136,–	15,–	151,–
3S 300, hot-dip galvanized	A	1342,–	400,–	1742,–
Lid, galvanized	A	174,–	18,–	192,–
Castor Set, polyamide, Load capacity 1050 kg / castor set	A	136,–	15,–	151,–
3S 600, painted	A	1300,–	400,–	1700,–
Lid, galvanized	A	196,–	22,–	218,–
Castor Set, polyamide, Load capacity 1050 kg / castor set	A	136,–	15,–	151,–
3S 600, hot-dip galvanized	A	1402,–	400,–	1802,–
Lid, galvanized	A	196,–	22,–	218,–
Castor Set, polyamide, Load capacity 1050 kg / castor set	A	136,–	15,–	151,–

Automatic Tilting Container Type 4A	Category	Price	Freight charges	Price including freight charges
4A 600, painted	A	1103,–	266,–	1369,–
Lid, galvanized	A	196,–	22,–	218,–
Skip Body Welded Oil and Watertight	A	78,–	0,–	78,–
4A 600, hot-dip galvanized	A	1250,–	266,–	1516,–
Lid, galvanized	A	196,–	22,–	218,–
Skip Body Welded Oil and Watertight	A	78,–	0,–	78,–
4A 900, painted	A	1239,–	400,–	1639,–
Lid, galvanized	A	223,–	27,–	250,–
Skip Body Welded Oil and Watertight	A	78,–	0,–	78,–
4A 900, hot-dip galvanized	A	1424,–	400,–	1824,–
Lid, galvanized	A	223,–	27,–	250,–
Skip Body Welded Oil and Watertight	A	78,–	0,–	78,–
4A 1200, painted	A	1327,–	400,–	1727,–
Lid, galvanized	A	223,–	26,–	249,–
Skip Body Welded Oil and Watertight	A	121,–	0,–	121,–
4A 1200, hot-dip galvanized	A	1558,–	400,–	1958,–
Lid, galvanized	A	223,–	26,–	249,–
Skip Body Welded Oil and Watertight	A	121,–	0,–	121,–

Drum Gripper Type 4P	Category	Price	Freight charges	Price including freight charges
4P, painted	B	578,–	70,–	648,–
4P, hot-dip galvanized	B	551,–	70,–	621,–

Prices in EUR, valid EXW DE-46354 Südlohn, DE-38820 Halberstadt, unpacked
Freight charges valid CPT Norway, islands and oversea territories excluded

BAUER GmbH
Eichendorffstr. 62
46354 Südlohn, Germany

Tel. +49 2862 70 90
info@bauer-suedlohn.com
www.bauer-suedlohn.com

Geschäftsführer
Patrick Bauer, Pascal Bauer
Amtsgericht Coesfeld HRB 5259

TÜVNORD
TÜV NORD CERT GmbH
DIN EN ISO 9001
tuev-nord.de

Price List 0726 en-NO
Forklift Truck Attachments

Drum Gripper Type 4P-D	Category	Price	Freight charges	Price including freight charges
4P-D120, painted	B	578,–	70,–	648,–
4P-D120, hot-dip galvanized	B	551,–	70,–	621,–
4P-D220, painted	B	578,–	70,–	648,–
4P-D220, hot-dip galvanized	B	551,–	70,–	621,–

Tilting Container Type AK	Category	Price	Freight charges	Price including freight charges
AK 50, painted	A	802,–	266,–	1068,–
Lid, galvanized	A	140,–	16,–	156,–
Castor Set, polyamide, Load capacity 1050 kg / castor set	A	136,–	15,–	151,–
Skip Body Welded Oil and Watertight	A	78,–	0,–	78,–
AK 50, hot-dip galvanized	A	956,–	266,–	1222,–
Lid, galvanized	A	140,–	16,–	156,–
Castor Set, polyamide, Load capacity 1050 kg / castor set	A	136,–	15,–	151,–
Skip Body Welded Oil and Watertight	A	78,–	0,–	78,–
AK 75, painted	A	897,–	266,–	1163,–
Lid, galvanized	A	192,–	21,–	213,–
Castor Set, polyamide, Load capacity 1050 kg / castor set	A	136,–	15,–	151,–
Skip Body Welded Oil and Watertight	A	78,–	0,–	78,–
AK 75, hot-dip galvanized	A	1048,–	400,–	1448,–
Lid, galvanized	A	192,–	21,–	213,–
Castor Set, polyamide, Load capacity 1050 kg / castor set	A	136,–	15,–	151,–
Skip Body Welded Oil and Watertight	A	78,–	0,–	78,–
AK 100, painted	A	970,–	400,–	1370,–
Lid, galvanized	A	218,–	26,–	244,–
Castor Set, polyamide, Load capacity 1050 kg / castor set	A	136,–	15,–	151,–
Skip Body Welded Oil and Watertight	A	121,–	0,–	121,–
AK 100, hot-dip galvanized	A	1133,–	400,–	1533,–
Lid, galvanized	A	218,–	26,–	244,–
Castor Set, polyamide, Load capacity 1050 kg / castor set	A	136,–	15,–	151,–
Skip Body Welded Oil and Watertight	A	121,–	0,–	121,–
AK 150, painted	A	1238,–	400,–	1638,–
Lid, galvanized	A	305,–	28,–	333,–
Castor Set, polyamide, Load capacity 1050 kg / castor set	A	136,–	15,–	151,–
Skip Body Welded Oil and Watertight	A	121,–	0,–	121,–
AK 150, hot-dip galvanized	A	1448,–	400,–	1848,–
Lid, galvanized	A	305,–	28,–	333,–
Castor Set, polyamide, Load capacity 1050 kg / castor set	A	136,–	15,–	151,–
Skip Body Welded Oil and Watertight	A	121,–	0,–	121,–

Container for Building Materials Type BBG	Category	Price	Freight charges	Price including freight charges
BBG 100, painted	A	405,–	266,–	671,–
Lid, galvanized	A	189,–	182,–	371,–
BBG 100, hot-dip galvanized	A	496,–	266,–	762,–
Lid, galvanized	A	189,–	182,–	371,–

Prices in EUR, valid EXW DE-46354 Südlohn, DE-38820 Halberstadt, unpacked
Freight charges valid CPT Norway, islands and oversea territories excluded

BAUER GmbH
Eichendorffstr. 62
46354 Südlohn, Germany

Tel. +49 2862 70 90
info@bauer-suedlohn.com
www.bauer-suedlohn.com

Geschäftsführer
Patrick Bauer, Pascal Bauer
Amtsgericht Coesfeld HRB 5259

TÜVNORD
TÜV NORD CERT GmbH
DIN EN ISO 9001
tuev-nord.de

Price List 0726 en-NO
Forklift Truck Attachments

Container for Building Materials Type BBK	Category	Price	Freight charges	Price including freight charges
BBK 100, painted	A	496,–	266,–	762,–
Lid, galvanized	A	189,–	182,–	371,–
BBK 100, hot-dip galvanized	A	571,–	266,–	837,–
Lid, galvanized	A	189,–	182,–	371,–

Material Container Type BBM	Category	Price	Freight charges	Price including freight charges
BBM 500, painted	A	325,–	182,–	507,–
BBM 500, hot-dip galvanized	A	359,–	182,–	541,–

Container for Building Materials Type BBP	Category	Price	Freight charges	Price including freight charges
BBP 100, painted	A	433,–	182,–	615,–
Lid, galvanized	A	189,–	182,–	371,–
Pick-up cones (pins) and angle iron traverse lock	A	51,–	10,–	61,–
BBP 100, hot-dip galvanized	A	511,–	182,–	693,–
Lid, galvanized	A	189,–	182,–	371,–
Pick-up cones (pins) and angle iron traverse lock	A	51,–	10,–	61,–

Tilting Traverse for Containers for Building Material Containers Type BBT	Category	Price	Freight charges	Price including freight charges
BBT, painted	A	571,–	266,–	837,–
BBT, hot-dip galvanized	A	649,–	266,–	915,–

Building Materials Container Type BC	Category	Price	Freight charges	Price including freight charges
BC 500, painted	B	957,–	266,–	1223,–
Lid, galvanized	B	143,–	16,–	159,–
Castor Set, polyamide, Load capacity 1350 kg / castor set	A	192,–	15,–	207,–
BC 500, hot-dip galvanized	B	1179,–	400,–	1579,–
Lid, galvanized	B	143,–	16,–	159,–
Castor Set, polyamide, Load capacity 1350 kg / castor set	A	192,–	15,–	207,–
BC 500 (brick clamp operated), painted	B	1026,–	266,–	1292,–
Lid, galvanized	B	143,–	16,–	159,–
Castor Set, polyamide, Load capacity 1350 kg / castor set	A	192,–	15,–	207,–
BC 500 (brick clamp operated), hot-dip galvanized	B	1250,–	400,–	1650,–
Lid, galvanized	B	143,–	16,–	159,–
Castor Set, polyamide, Load capacity 1350 kg / castor set	A	192,–	15,–	207,–
BC 1000, painted	B	1043,–	400,–	1443,–
Lid, galvanized	B	143,–	16,–	159,–
Castor Set, polyamide, Load capacity 1350 kg / castor set	A	192,–	15,–	207,–
BC 1000, hot-dip galvanized	B	1316,–	400,–	1716,–
Lid, galvanized	B	143,–	16,–	159,–
Castor Set, polyamide, Load capacity 1350 kg / castor set	A	192,–	15,–	207,–
BC 1000 (brick clamp operated), painted	B	1111,–	400,–	1511,–
Lid, galvanized	B	143,–	16,–	159,–
Castor Set, polyamide, Load capacity 1350 kg / castor set	A	192,–	15,–	207,–
BC 1000 (brick clamp operated), hot-dip galvanized	B	1386,–	400,–	1786,–
Lid, galvanized	B	143,–	16,–	159,–

Prices in EUR, valid EXW DE-46354 Südlohn, DE-38820 Halberstadt, unpacked
Freight charges valid CPT Norway, islands and oversea territories excluded

BAUER GmbH
Eichendorffstr. 62
46354 Südlohn, Germany

Tel. +49 2862 70 90
info@bauer-suedlohn.com
www.bauer-suedlohn.com

Geschäftsführer
Patrick Bauer, Pascal Bauer
Amtsgericht Coesfeld HRB 5259

TÜVNORD
TÜV NORD CERT GmbH
DIN EN ISO 9001
tuev-nord.de

Price List 0726 en-NO
Forklift Truck Attachments

Building Materials Container Type BC	Category	Price	Freight charges	Price including freight charges
Castor Set, polyamide, Load capacity 1350 kg / castor set	A	192,–	15,–	207,–

Tilting Container Type BK	Category	Price	Freight charges	Price including freight charges
BK 30, painted	A	700,–	266,–	966,–
Lid, galvanized	A	98,–	18,–	116,–
Castor Set, polyamide, Load capacity 1350 kg / castor set	A	192,–	15,–	207,–
Heavy-duty Castor Set, polyamide, Load capacity 2550 kg / castor set	A	379,–	15,–	394,–
Skip Body Welded Oil and Watertight	A	78,–	0,–	78,–
BK 30, hot-dip galvanized	A	984,–	266,–	1250,–
Lid, galvanized	A	98,–	18,–	116,–
Castor Set, polyamide, Load capacity 1350 kg / castor set	A	192,–	15,–	207,–
Heavy-duty Castor Set, polyamide, Load capacity 2550 kg / castor set	A	379,–	15,–	394,–
Skip Body Welded Oil and Watertight	A	78,–	0,–	78,–
BK 50, painted	A	984,–	266,–	1250,–
Lid, galvanized	A	98,–	20,–	118,–
Castor Set, polyamide, Load capacity 1350 kg / castor set	A	192,–	15,–	207,–
Heavy-duty Castor Set, polyamide, Load capacity 2550 kg / castor set	A	379,–	15,–	394,–
Skip Body Welded Oil and Watertight	A	78,–	0,–	78,–
BK 50, hot-dip galvanized	A	1327,–	400,–	1727,–
Lid, galvanized	A	98,–	20,–	118,–
Castor Set, polyamide, Load capacity 1350 kg / castor set	A	192,–	15,–	207,–
Heavy-duty Castor Set, polyamide, Load capacity 2550 kg / castor set	A	379,–	15,–	394,–
Skip Body Welded Oil and Watertight	A	78,–	0,–	78,–
BK 80, painted	A	1297,–	400,–	1697,–
Lid, galvanized	A	144,–	22,–	166,–
Castor Set, polyamide, Load capacity 1350 kg / castor set	A	192,–	15,–	207,–
Heavy-duty Castor Set, polyamide, Load capacity 2550 kg / castor set	A	379,–	15,–	394,–
Skip Body Welded Oil and Watertight	A	78,–	0,–	78,–
BK 80, hot-dip galvanized	A	1814,–	400,–	2214,–
Lid, galvanized	A	144,–	22,–	166,–
Castor Set, polyamide, Load capacity 1350 kg / castor set	A	192,–	15,–	207,–
Heavy-duty Castor Set, polyamide, Load capacity 2550 kg / castor set	A	379,–	15,–	394,–
Skip Body Welded Oil and Watertight	A	78,–	0,–	78,–
BK 100, painted	A	1508,–	400,–	1908,–
Lid, galvanized	A	173,–	27,–	200,–
Castor Set, polyamide, Load capacity 1350 kg / castor set	A	192,–	15,–	207,–
Heavy-duty Castor Set, polyamide, Load capacity 2550 kg / castor set	A	379,–	15,–	394,–
Skip Body Welded Oil and Watertight	A	121,–	0,–	121,–
BK 100, hot-dip galvanized	A	2070,–	400,–	2470,–
Lid, galvanized	A	173,–	27,–	200,–
Castor Set, polyamide, Load capacity 1350 kg / castor set	A	192,–	15,–	207,–
Heavy-duty Castor Set, polyamide, Load capacity 2550 kg / castor set	A	379,–	15,–	394,–
Skip Body Welded Oil and Watertight	A	121,–	0,–	121,–
BK 120, painted	A	1640,–	400,–	2040,–
Lid, galvanized	A	184,–	32,–	216,–
Castor Set, polyamide, Load capacity 1350 kg / castor set	A	192,–	15,–	207,–

Prices in EUR, valid EXW DE-46354 Südlohn, DE-38820 Halberstadt, unpacked
Freight charges valid CPT Norway, islands and oversea territories excluded

BAUER GmbH
Eichendorffstr. 62
46354 Südlohn, Germany

Tel. +49 2862 70 90
info@bauer-suedlohn.com
www.bauer-suedlohn.com

Geschäftsführer
Patrick Bauer, Pascal Bauer
Amtsgericht Coesfeld HRB 5259

TÜVNORD
TÜV NORD CERT GmbH
DIN EN ISO 9001
tuev-nord.de

Price List 0726 en-NO
Forklift Truck Attachments

Tilting Container Type BK	Category	Price	Freight charges	Price including freight charges
Heavy-duty Castor Set, polyamide, Load capacity 2550 kg / castor set	A	379,–	15,–	394,–
Skip Body Welded Oil and Watertight	A	121,–	0,–	121,–
BK 120, hot-dip galvanized	A	2235,–	400,–	2635,–
Lid, galvanized	A	184,–	32,–	216,–
Castor Set, polyamide, Load capacity 1350 kg / castor set	A	192,–	15,–	207,–
Heavy-duty Castor Set, polyamide, Load capacity 2550 kg / castor set	A	379,–	15,–	394,–
Skip Body Welded Oil and Watertight	A	121,–	0,–	121,–
BK 150, painted	A	1801,–	504,–	2305,–
Lid, galvanized	A	211,–	39,–	250,–
Castor Set, polyamide, Load capacity 1350 kg / castor set	A	192,–	15,–	207,–
Heavy-duty Castor Set, polyamide, Load capacity 2550 kg / castor set	A	379,–	15,–	394,–
Skip Body Welded Oil and Watertight	A	121,–	0,–	121,–
BK 150, hot-dip galvanized	A	2444,–	504,–	2948,–
Lid, galvanized	A	211,–	39,–	250,–
Castor Set, polyamide, Load capacity 1350 kg / castor set	A	192,–	15,–	207,–
Heavy-duty Castor Set, polyamide, Load capacity 2550 kg / castor set	A	379,–	15,–	394,–
Skip Body Welded Oil and Watertight	A	121,–	0,–	121,–
BK 200, painted	A	2240,–	504,–	2744,–
Lid, galvanized	A	223,–	182,–	405,–
Castor Set, polyamide, Load capacity 1350 kg / castor set	A	192,–	15,–	207,–
Heavy-duty Castor Set, polyamide, Load capacity 2550 kg / castor set	A	379,–	15,–	394,–
Skip Body Welded Oil and Watertight	A	121,–	0,–	121,–
BK 200, hot-dip galvanized	A	3052,–	683,–	3735,–
Lid, galvanized	A	223,–	182,–	405,–
Castor Set, polyamide, Load capacity 1350 kg / castor set	A	192,–	15,–	207,–
Heavy-duty Castor Set, polyamide, Load capacity 2550 kg / castor set	A	379,–	15,–	394,–
Skip Body Welded Oil and Watertight	A	121,–	0,–	121,–

Container With Drop Away Base Type BKB	Category	Price	Freight charges	Price including freight charges
BKB 500, painted	A	763,–	266,–	1029,–
Lid, galvanized	A	196,–	18,–	214,–
Castor Set, polyamide, Load capacity 1350 kg / castor set	A	192,–	15,–	207,–
BKB 500, hot-dip galvanized	A	907,–	266,–	1173,–
Lid, galvanized	A	196,–	18,–	214,–
Castor Set, polyamide, Load capacity 1350 kg / castor set	A	192,–	15,–	207,–
BKB 700, painted	A	816,–	266,–	1082,–
Lid, galvanized	A	196,–	18,–	214,–
Castor Set, polyamide, Load capacity 1350 kg / castor set	A	192,–	15,–	207,–
BKB 700, hot-dip galvanized	A	960,–	266,–	1226,–
Lid, galvanized	A	196,–	18,–	214,–
Castor Set, polyamide, Load capacity 1350 kg / castor set	A	192,–	15,–	207,–
BKB 1000, painted	A	865,–	266,–	1131,–
Lid, galvanized	A	196,–	18,–	214,–
Castor Set, polyamide, Load capacity 1350 kg / castor set	A	192,–	15,–	207,–
BKB 1000, hot-dip galvanized	A	1029,–	266,–	1295,–
Lid, galvanized	A	196,–	18,–	214,–

Prices in EUR, valid EXW DE-46354 Südlohn, DE-38820 Halberstadt, unpacked
Freight charges valid CPT Norway, islands and oversea territories excluded

BAUER GmbH
Eichendorffstr. 62
46354 Südlohn, Germany

Tel. +49 2862 70 90
info@bauer-suedlohn.com
www.bauer-suedlohn.com

Geschäftsführer
Patrick Bauer, Pascal Bauer
Amtsgericht Coesfeld HRB 5259

TÜVNORD
TÜV NORD CERT GmbH
DIN EN ISO 9001
tuev-nord.de

Price List 0726 en-NO
Forklift Truck Attachments

Container With Drop Away Base Type BKB	Category	Price	Freight charges	Price including freight charges
Castor Set, polyamide, Load capacity 1350 kg / castor set	A	192,–	15,–	207,–

Tilting Container Type BKC	Category	Price	Freight charges	Price including freight charges
BKC 200, painted	A	2308,–	683,–	2991,–
Lid, galvanized	A	450,–	182,–	632,–
Skip Body Welded Oil and Watertight	A	121,–	0,–	121,–
BKC 200, hot-dip galvanized	A	3089,–	683,–	3772,–
Lid, galvanized	A	450,–	182,–	632,–
Skip Body Welded Oil and Watertight	A	121,–	0,–	121,–
BKC 300, painted	A	2558,–	683,–	3241,–
Lid, galvanized	A	450,–	182,–	632,–
Skip Body Welded Oil and Watertight	A	121,–	0,–	121,–
BKC 300, hot-dip galvanized	A	3367,–	683,–	4050,–
Lid, galvanized	A	450,–	182,–	632,–
Skip Body Welded Oil and Watertight	A	121,–	0,–	121,–
BKC 400, painted	A	3150,–	683,–	3833,–
Lid, galvanized	A	450,–	266,–	716,–
Skip Body Welded Oil and Watertight	A	121,–	0,–	121,–
BKC 400, hot-dip galvanized	A	4067,–	893,–	4960,–
Lid, galvanized	A	450,–	266,–	716,–
Skip Body Welded Oil and Watertight	A	121,–	0,–	121,–
BKC 500, painted	A	3659,–	893,–	4552,–
Lid, galvanized	A	450,–	266,–	716,–
Skip Body Welded Oil and Watertight	A	121,–	0,–	121,–
BKC 500, hot-dip galvanized	A	4641,–	893,–	5534,–
Lid, galvanized	A	450,–	266,–	716,–
Skip Body Welded Oil and Watertight	A	121,–	0,–	121,–

Tilting Container Type BKC-H	Category	Price	Freight charges	Price including freight charges
BKC-H 200, painted	A	3422,–	683,–	4105,–
Lid, galvanized	A	450,–	182,–	632,–
Skip Body Welded Oil and Watertight	A	121,–	0,–	121,–
BKC-H 200, hot-dip galvanized	A	4204,–	683,–	4887,–
Lid, galvanized	A	450,–	182,–	632,–
Skip Body Welded Oil and Watertight	A	121,–	0,–	121,–
BKC-H 300, painted	A	3673,–	683,–	4356,–
Lid, galvanized	A	450,–	182,–	632,–
Skip Body Welded Oil and Watertight	A	121,–	0,–	121,–
BKC-H 300, hot-dip galvanized	A	4483,–	683,–	5166,–
Lid, galvanized	A	450,–	182,–	632,–
Skip Body Welded Oil and Watertight	A	121,–	0,–	121,–
BKC-H 400, painted	A	4265,–	683,–	4948,–
Lid, galvanized	A	450,–	266,–	716,–
Skip Body Welded Oil and Watertight	A	121,–	0,–	121,–
BKC-H 400, hot-dip galvanized	A	5182,–	893,–	6075,–

Prices in EUR, valid EXW DE-46354 Südlohn, DE-38820 Halberstadt, unpacked
Freight charges valid CPT Norway, islands and oversea territories excluded

BAUER GmbH
Eichendorffstr. 62
46354 Südlohn, Germany

Tel. +49 2862 70 90
info@bauer-suedlohn.com
www.bauer-suedlohn.com

Geschäftsführer
Patrick Bauer, Pascal Bauer
Amtsgericht Coesfeld HRB 5259

TÜVNORD
TÜV NORD CERT GmbH
DIN EN ISO 9001
tuev-nord.de

Price List 0726 en-NO
Forklift Truck Attachments

Tilting Container Type BKC-H	Category	Price	Freight charges	Price including freight charges
Lid, galvanized	A	450,–	266,–	716,–
Skip Body Welded Oil and Watertight	A	121,–	0,–	121,–
BKC-H 500, painted	A	4774,–	893,–	5667,–
Lid, galvanized	A	450,–	266,–	716,–
Skip Body Welded Oil and Watertight	A	121,–	0,–	121,–
BKC-H 500, hot-dip galvanized	A	5756,–	893,–	6649,–
Lid, galvanized	A	450,–	266,–	716,–
Skip Body Welded Oil and Watertight	A	121,–	0,–	121,–

Tilting Container Type BKM	Category	Price	Freight charges	Price including freight charges
BKM 30, painted	A	700,–	266,–	966,–
Lid, galvanized	A	104,–	18,–	122,–
Castor Set, polyamide, Load capacity 1350 kg / castor set	A	192,–	15,–	207,–
Heavy-duty Castor Set, polyamide, Load capacity 2550 kg / castor set	A	379,–	15,–	394,–
Skip Body Welded Oil and Watertight	A	78,–	0,–	78,–
BKM 30, hot-dip galvanized	A	984,–	266,–	1250,–
Lid, galvanized	A	104,–	18,–	122,–
Castor Set, polyamide, Load capacity 1350 kg / castor set	A	192,–	15,–	207,–
Heavy-duty Castor Set, polyamide, Load capacity 2550 kg / castor set	A	379,–	15,–	394,–
Skip Body Welded Oil and Watertight	A	78,–	0,–	78,–
BKM 50, painted	A	984,–	266,–	1250,–
Lid, galvanized	A	130,–	21,–	151,–
Castor Set, polyamide, Load capacity 1350 kg / castor set	A	192,–	15,–	207,–
Heavy-duty Castor Set, polyamide, Load capacity 2550 kg / castor set	A	379,–	15,–	394,–
Skip Body Welded Oil and Watertight	A	78,–	0,–	78,–
BKM 50, hot-dip galvanized	A	1327,–	266,–	1593,–
Lid, galvanized	A	130,–	21,–	151,–
Castor Set, polyamide, Load capacity 1350 kg / castor set	A	192,–	15,–	207,–
Heavy-duty Castor Set, polyamide, Load capacity 2550 kg / castor set	A	379,–	15,–	394,–
Skip Body Welded Oil and Watertight	A	78,–	0,–	78,–
BKM 75, painted	A	1246,–	400,–	1646,–
Lid, galvanized	A	142,–	22,–	164,–
Castor Set, polyamide, Load capacity 1350 kg / castor set	A	192,–	15,–	207,–
Heavy-duty Castor Set, polyamide, Load capacity 2550 kg / castor set	A	379,–	15,–	394,–
Skip Body Welded Oil and Watertight	A	78,–	0,–	78,–
BKM 75, hot-dip galvanized	A	1672,–	400,–	2072,–
Lid, galvanized	A	142,–	22,–	164,–
Castor Set, polyamide, Load capacity 1350 kg / castor set	A	192,–	15,–	207,–
Heavy-duty Castor Set, polyamide, Load capacity 2550 kg / castor set	A	379,–	15,–	394,–
Skip Body Welded Oil and Watertight	A	78,–	0,–	78,–
BKM 100, painted	A	1508,–	400,–	1908,–
Lid, galvanized	A	185,–	27,–	212,–
Castor Set, polyamide, Load capacity 1350 kg / castor set	A	192,–	15,–	207,–
Heavy-duty Castor Set, polyamide, Load capacity 2550 kg / castor set	A	379,–	15,–	394,–
Skip Body Welded Oil and Watertight	A	121,–	0,–	121,–
BKM 100, hot-dip galvanized	A	2070,–	400,–	2470,–

Prices in EUR, valid EXW DE-46354 Südlohn, DE-38820 Halberstadt, unpacked
Freight charges valid CPT Norway, islands and oversea territories excluded

BAUER GmbH
Eichendorffstr. 62
46354 Südlohn, Germany

Tel. +49 2862 70 90
info@bauer-suedlohn.com
www.bauer-suedlohn.com

Geschäftsführer
Patrick Bauer, Pascal Bauer
Amtsgericht Coesfeld HRB 5259

TÜVNORD
TÜV NORD CERT GmbH
DIN EN ISO 9001
tuev-nord.de

Price List 0726 en-NO
Forklift Truck Attachments

Tilting Container Type BKM	Category	Price	Freight charges	Price including freight charges
Lid, galvanized	A	185,–	27,–	212,–
Castor Set, polyamide, Load capacity 1350 kg / castor set	A	192,–	15,–	207,–
Heavy-duty Castor Set, polyamide, Load capacity 2550 kg / castor set	A	379,–	15,–	394,–
Skip Body Welded Oil and Watertight	A	121,–	0,–	121,–
BKM 150, painted	A	1801,–	504,–	2305,–
Lid, galvanized	A	271,–	36,–	307,–
Castor Set, polyamide, Load capacity 1350 kg / castor set	A	192,–	15,–	207,–
Heavy-duty Castor Set, polyamide, Load capacity 2550 kg / castor set	A	379,–	15,–	394,–
Skip Body Welded Oil and Watertight	A	121,–	0,–	121,–
BKM 150, hot-dip galvanized	A	2444,–	504,–	2948,–
Lid, galvanized	A	271,–	36,–	307,–
Castor Set, polyamide, Load capacity 1350 kg / castor set	A	192,–	15,–	207,–
Heavy-duty Castor Set, polyamide, Load capacity 2550 kg / castor set	A	379,–	15,–	394,–
Skip Body Welded Oil and Watertight	A	121,–	0,–	121,–
BKM 200, painted	A	2240,–	504,–	2744,–
Lid, galvanized	A	302,–	182,–	484,–
Castor Set, polyamide, Load capacity 1350 kg / castor set	A	192,–	15,–	207,–
Heavy-duty Castor Set, polyamide, Load capacity 2550 kg / castor set	A	379,–	15,–	394,–
Skip Body Welded Oil and Watertight	A	121,–	0,–	121,–
Lid, galvanized	A	302,–	182,–	484,–
Castor Set, polyamide, Load capacity 1350 kg / castor set	A	192,–	15,–	207,–
Heavy-duty Castor Set, polyamide, Load capacity 2550 kg / castor set	A	379,–	15,–	394,–
Skip Body Welded Oil and Watertight	A	121,–	0,–	121,–

Traverse For Stacking Tippers Type BKT	Category	Price	Freight charges	Price including freight charges
BKT 30, painted	A	368,–	266,–	634,–
Traverse Stand Type TS, hot-dip galvanized	A	78,–	8,–	86,–
BKT 55, painted	A	390,–	266,–	656,–
Traverse Stand Type TS, hot-dip galvanized	A	78,–	9,–	87,–
BKT 70, painted	A	390,–	266,–	656,–
Traverse Stand Type TS, hot-dip galvanized	A	78,–	9,–	87,–
BKT 90, painted	A	392,–	266,–	658,–
Traverse Stand Type TS, hot-dip galvanized	A	78,–	9,–	87,–
BKT 150, painted	A	631,–	266,–	897,–
Traverse Stand Type TS, hot-dip galvanized	A	78,–	9,–	87,–
BKT 200, painted	A	696,–	266,–	962,–
Traverse Stand Type TS, hot-dip galvanized	A	78,–	9,–	87,–

Shovel Type BSE	Category	Price	Freight charges	Price including freight charges
BSE 50, painted	A	1486,–	400,–	1886,–
BSE 75, painted	A	1769,–	400,–	2169,–
BSE 100, painted	A	2219,–	504,–	2723,–
BSE 150, painted	A	2507,–	504,–	3011,–
BSE 200, painted	A	2786,–	683,–	3469,–
BSE 250, painted	A	3433,–	735,–	4168,–

Prices in EUR, valid EXW DE-46354 Südlohn, DE-38820 Halberstadt, unpacked
Freight charges valid CPT Norway, islands and oversea territories excluded

BAUER GmbH
Eichendorffstr. 62
46354 Südlohn, Germany

Tel. +49 2862 70 90
info@bauer-suedlohn.com
www.bauer-suedlohn.com

Geschäftsführer
Patrick Bauer, Pascal Bauer
Amtsgericht Coesfeld HRB 5259

TÜVNORD
TÜV NORD CERT GmbH
DIN EN ISO 9001
tuev-nord.de

Price List 0726 en-NO
Forklift Truck Attachments

Shovel Type BSI	Category	Price	Freight charges	Price including freight charges
BSI 50, painted	A	1257,–	266,–	1523,–
BSI 75, painted	A	1424,–	400,–	1824,–
BSI 100, painted	A	1786,–	400,–	2186,–

Stacking Tipper Type BSK	Category	Price	Freight charges	Price including freight charges
BSK 30, painted	A	265,–	182,–	447,–
Lid, galvanized	A	69,–	12,–	81,–
Castor Set, polyamide, Load capacity 1350 kg / castor set	A	192,–	15,–	207,–
Skip Body Welded Oil and Watertight	A	78,–	0,–	78,–
Set of 5 self-adhesive stickers with symbols for: glass, paper, plastic, metal, residual waste	A	29,–	on request	on request
BSK 30, hot-dip galvanized	A	320,–	182,–	502,–
Lid, galvanized	A	69,–	12,–	81,–
Castor Set, polyamide, Load capacity 1350 kg / castor set	A	192,–	15,–	207,–
Skip Body Welded Oil and Watertight	A	78,–	0,–	78,–
Set of 5 self-adhesive stickers with symbols for: glass, paper, plastic, metal, residual waste	A	29,–	on request	on request
BSK 55, painted	A	332,–	182,–	514,–
Lid, galvanized	A	98,–	15,–	113,–
Castor Set, polyamide, Load capacity 1350 kg / castor set	A	192,–	15,–	207,–
Skip Body Welded Oil and Watertight	A	78,–	0,–	78,–
Set of 5 self-adhesive stickers with symbols for: glass, paper, plastic, metal, residual waste	A	29,–	on request	on request
BSK 55, hot-dip galvanized	A	405,–	182,–	587,–
Lid, galvanized	A	98,–	15,–	113,–
Castor Set, polyamide, Load capacity 1350 kg / castor set	A	192,–	15,–	207,–
Skip Body Welded Oil and Watertight	A	78,–	0,–	78,–
Set of 5 self-adhesive stickers with symbols for: glass, paper, plastic, metal, residual waste	A	29,–	on request	on request
BSK 70, painted	A	352,–	182,–	534,–
Lid, galvanized	A	122,–	15,–	137,–
Castor Set, polyamide, Load capacity 1350 kg / castor set	A	192,–	15,–	207,–
Skip Body Welded Oil and Watertight	A	78,–	0,–	78,–
Set of 5 self-adhesive stickers with symbols for: glass, paper, plastic, metal, residual waste	A	29,–	on request	on request
BSK 70, hot-dip galvanized	A	457,–	182,–	639,–
Lid, galvanized	A	122,–	15,–	137,–
Castor Set, polyamide, Load capacity 1350 kg / castor set	A	192,–	15,–	207,–
Skip Body Welded Oil and Watertight	A	78,–	0,–	78,–
Set of 5 self-adhesive stickers with symbols for: glass, paper, plastic, metal, residual waste	A	29,–	on request	on request
BSK 90, painted	A	379,–	182,–	561,–
Lid, galvanized	A	166,–	18,–	184,–
Castor Set, polyamide, Load capacity 1350 kg / castor set	A	192,–	15,–	207,–
Skip Body Welded Oil and Watertight	A	78,–	0,–	78,–
Set of 5 self-adhesive stickers with symbols for: glass, paper, plastic, metal, residual waste	A	29,–	on request	on request
BSK 90, hot-dip galvanized	A	487,–	266,–	753,–
Lid, galvanized	A	166,–	18,–	184,–
Castor Set, polyamide, Load capacity 1350 kg / castor set	A	192,–	15,–	207,–
Skip Body Welded Oil and Watertight	A	78,–	0,–	78,–
Set of 5 self-adhesive stickers with symbols for: glass, paper, plastic, metal, residual waste	A	29,–	on request	on request
BSK 150, painted	A	871,–	266,–	1137,–

Prices in EUR, valid EXW DE-46354 Südlohn, DE-38820 Halberstadt, unpacked
Freight charges valid CPT Norway, islands and oversea territories excluded

BAUER GmbH
Eichendorffstr. 62
46354 Südlohn, Germany

Tel. +49 2862 70 90
info@bauer-suedlohn.com
www.bauer-suedlohn.com

Geschäftsführer
Patrick Bauer, Pascal Bauer
Amtsgericht Coesfeld HRB 5259

TÜVNORD
TÜV NORD CERT GmbH
DIN EN ISO 9001
tuev-nord.de

Price List 0726 en-NO
Forklift Truck Attachments

Stacking Tipper Type BSK	Category	Price	Freight charges	Price including freight charges
Lid, galvanized	A	223,–	21,–	244,–
Castor Set, polyamide, Load capacity 1350 kg / castor set	A	192,–	15,–	207,–
Skip Body Welded Oil and Watertight	A	121,–	0,–	121,–
Set of 5 self-adhesive stickers with symbols for: glass, paper, plastic, metal, residual waste	A	29,–	on request	on request
BSK 150, hot-dip galvanized	A	1019,–	266,–	1285,–
Lid, galvanized	A	223,–	21,–	244,–
Castor Set, polyamide, Load capacity 1350 kg / castor set	A	192,–	15,–	207,–
Skip Body Welded Oil and Watertight	A	121,–	0,–	121,–
Set of 5 self-adhesive stickers with symbols for: glass, paper, plastic, metal, residual waste	A	29,–	on request	on request
BSK 200, painted	A	934,–	266,–	1200,–
Lid, galvanized	A	284,–	26,–	310,–
Castor Set, polyamide, Load capacity 1350 kg / castor set	A	192,–	15,–	207,–
Skip Body Welded Oil and Watertight	A	121,–	0,–	121,–
Set of 5 self-adhesive stickers with symbols for: glass, paper, plastic, metal, residual waste	A	29,–	on request	on request
BSK 200, hot-dip galvanized	A	1169,–	266,–	1435,–
Lid, galvanized	A	284,–	26,–	310,–
Castor Set, polyamide, Load capacity 1350 kg / castor set	A	192,–	15,–	207,–
Skip Body Welded Oil and Watertight	A	121,–	0,–	121,–
Set of 5 self-adhesive stickers with symbols for: glass, paper, plastic, metal, residual waste	A	29,–	on request	on request

Lattice Tilting Container Type BSK-G	Category	Price	Freight charges	Price including freight charges
BSK-G 90, painted	A	344,–	182,–	526,–
Lid, galvanized	A	166,–	18,–	184,–
Castor Set, polyamide, Load capacity 1350 kg / castor set	A	192,–	15,–	207,–
BSK-G 90, hot-dip galvanized	A	419,–	182,–	601,–
Lid, galvanized	A	166,–	18,–	184,–
Castor Set, polyamide, Load capacity 1350 kg / castor set	A	192,–	15,–	207,–

Swarf Stacking Tipper Type BSL	Category	Price	Freight charges	Price including freight charges
BSL 30, painted	A	590,–	182,–	772,–
Lid, galvanized	A	69,–	12,–	81,–
Castor Set, polyamide, Load capacity 1350 kg / castor set	A	192,–	15,–	207,–
BSL 30, hot-dip galvanized	A	679,–	182,–	861,–
Lid, galvanized	A	69,–	12,–	81,–
Castor Set, polyamide, Load capacity 1350 kg / castor set	A	192,–	15,–	207,–
BSL 55, painted	A	726,–	266,–	992,–
Lid, galvanized	A	98,–	15,–	113,–
Castor Set, polyamide, Load capacity 1350 kg / castor set	A	192,–	15,–	207,–
BSL 55, hot-dip galvanized	A	852,–	266,–	1118,–
Lid, galvanized	A	98,–	15,–	113,–
Castor Set, polyamide, Load capacity 1350 kg / castor set	A	192,–	15,–	207,–
BSL 70, painted	A	763,–	266,–	1029,–
Lid, galvanized	A	122,–	15,–	137,–
Castor Set, polyamide, Load capacity 1350 kg / castor set	A	192,–	15,–	207,–
BSL 70, hot-dip galvanized	A	912,–	266,–	1178,–

Prices in EUR, valid EXW DE-46354 Südlohn, DE-38820 Halberstadt, unpacked
Freight charges valid CPT Norway, islands and oversea territories excluded

BAUER GmbH
Eichendorffstr. 62
46354 Südlohn, Germany

Tel. +49 2862 70 90
info@bauer-suedlohn.com
www.bauer-suedlohn.com

Geschäftsführer
Patrick Bauer, Pascal Bauer
Amtsgericht Coesfeld HRB 5259

TÜVNORD
TÜV NORD CERT GmbH
DIN EN ISO 9001
tuev-nord.de

Price List 0726 en-NO
Forklift Truck Attachments

Swarf Stacking Tipper Type BSL	Category	Price	Freight charges	Price including freight charges
Lid, galvanized	A	122,–	15,–	137,–
Castor Set, polyamide, Load capacity 1350 kg / castor set	A	192,–	15,–	207,–
BSL 90, painted	A	830,–	266,–	1096,–
Lid, galvanized	A	166,–	18,–	184,–
Castor Set, polyamide, Load capacity 1350 kg / castor set	A	192,–	15,–	207,–
BSL 90, hot-dip galvanized	A	1004,–	266,–	1270,–
Lid, galvanized	A	166,–	18,–	184,–
Castor Set, polyamide, Load capacity 1350 kg / castor set	A	192,–	15,–	207,–
BSL 150, painted	A	1227,–	266,–	1493,–
Lid, galvanized	A	223,–	21,–	244,–
Castor Set, polyamide, Load capacity 1350 kg / castor set	A	192,–	15,–	207,–
BSL 150, hot-dip galvanized	A	1490,–	400,–	1890,–
Lid, galvanized	A	223,–	21,–	244,–
Castor Set, polyamide, Load capacity 1350 kg / castor set	A	192,–	15,–	207,–
BSL 200, painted	A	1327,–	400,–	1727,–
Lid, galvanized	A	284,–	26,–	310,–
Castor Set, polyamide, Load capacity 1350 kg / castor set	A	192,–	15,–	207,–
BSL 200, hot-dip galvanized	A	1792,–	400,–	2192,–
Lid, galvanized	A	284,–	26,–	310,–
Castor Set, polyamide, Load capacity 1350 kg / castor set	A	192,–	15,–	207,–

Shovel Type BSM	Category	Price	Freight charges	Price including freight charges
BSM 50, painted	A	1486,–	266,–	1752,–
BSM 75, painted	A	1769,–	400,–	2169,–
BSM 100, painted	A	2219,–	504,–	2723,–
BSM 150, painted	A	2507,–	504,–	3011,–
BSM 200, painted	A	2786,–	683,–	3469,–
BSM 250, painted	A	3433,–	735,–	4168,–

Swarf Stacking Tipper Type BSS	Category	Price	Freight charges	Price including freight charges
BSS 30, painted	A	422,–	182,–	604,–
Lid, galvanized	A	69,–	12,–	81,–
Castor Set, polyamide, Load capacity 1350 kg / castor set	A	192,–	15,–	207,–
BSS 30, hot-dip galvanized	A	490,–	182,–	672,–
Lid, galvanized	A	69,–	12,–	81,–
Castor Set, polyamide, Load capacity 1350 kg / castor set	A	192,–	15,–	207,–
BSS 55, painted	A	523,–	182,–	705,–
Lid, galvanized	A	98,–	15,–	113,–
Castor Set, polyamide, Load capacity 1350 kg / castor set	A	192,–	15,–	207,–
BSS 55, hot-dip galvanized	A	648,–	182,–	830,–
Lid, galvanized	A	98,–	15,–	113,–
Castor Set, polyamide, Load capacity 1350 kg / castor set	A	192,–	15,–	207,–
BSS 70, painted	A	561,–	182,–	743,–
Lid, galvanized	A	122,–	15,–	137,–
Castor Set, polyamide, Load capacity 1350 kg / castor set	A	192,–	15,–	207,–

Prices in EUR, valid EXW DE-46354 Südlohn, DE-38820 Halberstadt, unpacked
Freight charges valid CPT Norway, islands and oversea territories excluded

BAUER GmbH
Eichendorffstr. 62
46354 Südlohn, Germany

Tel. +49 2862 70 90
info@bauer-suedlohn.com
www.bauer-suedlohn.com

Geschäftsführer
Patrick Bauer, Pascal Bauer
Amtsgericht Coesfeld HRB 5259

TÜVNORD
TÜV NORD CERT GmbH
DIN EN ISO 9001
tuev-nord.de

Price List 0726 en-NO
Forklift Truck Attachments

Swarf Stacking Tipper Type BSS	Category	Price	Freight charges	Price including freight charges
BSS 70, hot-dip galvanized	A	708,–	266,–	974,–
Lid, galvanized	A	122,–	15,–	137,–
Castor Set, polyamide, Load capacity 1350 kg / castor set	A	192,–	15,–	207,–
BSS 90, painted	A	597,–	266,–	863,–
Lid, galvanized	A	166,–	18,–	184,–
Castor Set, polyamide, Load capacity 1350 kg / castor set	A	192,–	15,–	207,–
BSS 90, hot-dip galvanized	A	765,–	266,–	1031,–
Lid, galvanized	A	166,–	18,–	184,–
Castor Set, polyamide, Load capacity 1350 kg / castor set	A	192,–	15,–	207,–
BSS 150, painted	A	907,–	266,–	1173,–
Lid, galvanized	A	223,–	21,–	244,–
Castor Set, polyamide, Load capacity 1350 kg / castor set	A	192,–	15,–	207,–
BSS 150, hot-dip galvanized	A	1166,–	266,–	1432,–
Lid, galvanized	A	223,–	21,–	244,–
Castor Set, polyamide, Load capacity 1350 kg / castor set	A	192,–	15,–	207,–
BSS 200, painted	A	1024,–	266,–	1290,–
Lid, galvanized	A	284,–	26,–	310,–
Castor Set, polyamide, Load capacity 1350 kg / castor set	A	192,–	15,–	207,–
BSS 200, hot-dip galvanized	A	1371,–	400,–	1771,–
Lid, galvanized	A	284,–	26,–	310,–
Castor Set, polyamide, Load capacity 1350 kg / castor set	A	192,–	15,–	207,–

Traverse For Stacking Tippers Type BST	Category	Price	Freight charges	Price including freight charges
BST 30, painted	A	332,–	182,–	514,–
Traverse Stand Type TS, hot-dip galvanized	A	78,–	8,–	86,–
BST 55, painted	A	354,–	182,–	536,–
Traverse Stand Type TS, hot-dip galvanized	A	78,–	9,–	87,–
BST 70, painted	A	354,–	182,–	536,–
Traverse Stand Type TS, hot-dip galvanized	A	78,–	9,–	87,–
BST 90, painted	A	368,–	182,–	550,–
Traverse Stand Type TS, hot-dip galvanized	A	78,–	9,–	87,–
BST 150, painted	A	551,–	266,–	817,–
Traverse Stand Type TS, hot-dip galvanized	A	78,–	9,–	87,–
BST 200, painted	A	612,–	266,–	878,–
Traverse Stand Type TS, hot-dip galvanized	A	78,–	9,–	87,–

Traverse For Stacking Tippers Type BST-H	Category	Price	Freight charges	Price including freight charges
BST-H 30, painted	A	2127,–	266,–	2393,–
Traverse Stand Type TS, hot-dip galvanized	A	78,–	8,–	86,–
BST-H 55, painted	A	2257,–	266,–	2523,–
Traverse Stand Type TS, hot-dip galvanized	A	78,–	8,–	86,–
BST-H 70, painted	A	2257,–	266,–	2523,–
Traverse Stand Type TS, hot-dip galvanized	A	78,–	8,–	86,–
BST-H 90, painted	A	2374,–	266,–	2640,–
Traverse Stand Type TS, hot-dip galvanized	A	78,–	8,–	86,–

Prices in EUR, valid EXW DE-46354 Südlohn, DE-38820 Halberstadt, unpacked
Freight charges valid CPT Norway, islands and oversea territories excluded

BAUER GmbH
Eichendorffstr. 62
46354 Südlohn, Germany

Tel. +49 2862 70 90
info@bauer-suedlohn.com
www.bauer-suedlohn.com

Geschäftsführer
Patrick Bauer, Pascal Bauer
Amtsgericht Coesfeld HRB 5259

TÜVNORD
TÜV NORD CERT GmbH
DIN EN ISO 9001
tuev-nord.de

Price List 0726 en-NO
Forklift Truck Attachments

Traverse For Stacking Tippers Type BST-H	Category	Price	Freight charges	Price including freight charges
BST-H 150, painted	A	2700,–	400,–	3100,–
Traverse Stand Type TS, hot-dip galvanized	A	78,–	9,–	87,–
BST-H 200, painted	A	2972,–	400,–	3372,–
Traverse Stand Type TS, hot-dip galvanized	A	78,–	9,–	87,–

Traverse For Stacking Tippers Type BST-U	Category	Price	Freight charges	Price including freight charges
BST-U 30, painted	A	956,–	266,–	1222,–
BST-U 55, painted	A	1020,–	266,–	1286,–
BST-U 70, painted	A	1020,–	266,–	1286,–
BST-U 90, painted	A	1047,–	266,–	1313,–

Beam Traverse Type BT	Category	Price	Freight charges	Price including freight charges
BT 3001, painted	A	1877,–	348,–	2225,–
Support frames, hot-dip galvanized	A	276,–	182,–	458,–
BT 3002, painted	A	2117,–	348,–	2465,–
Support frames, hot-dip galvanized	A	276,–	182,–	458,–
BT 3003, painted	A	2276,–	348,–	2624,–
Support frames, hot-dip galvanized	A	276,–	182,–	458,–
BT 3005, painted	A	2596,–	481,–	3077,–
Support frames, hot-dip galvanized	A	276,–	182,–	458,–

Filling Hopper Type BTM	Category	Price	Freight charges	Price including freight charges
BTM, painted	A	2461,–	504,–	2965,–

Filling Hopper Type BTS	Category	Price	Freight charges	Price including freight charges
BTS, painted	A	2107,–	504,–	2611,–

Bin Type C	Category	Price	Freight charges	Price including freight charges
C 30, painted	A	422,–	182,–	604,–
C 30, hot-dip galvanized	A	463,–	182,–	645,–
C 80, painted	A	607,–	182,–	789,–
C 80, hot-dip galvanized	A	653,–	182,–	835,–

Swarf Bin Type CS	Category	Price	Freight charges	Price including freight charges
CS 30, painted	A	486,–	182,–	668,–
CS 30, hot-dip galvanized	A	532,–	182,–	714,–
CS 80, painted	A	717,–	182,–	899,–
CS 80, hot-dip galvanized	A	766,–	266,–	1032,–

Shovel Type DGS	Category	Price	Freight charges	Price including freight charges
DGS 500, painted	A	2655,–	400,–	3055,–
DGS 700, painted	A	2685,–	400,–	3085,–
DGS 950, painted	A	2723,–	504,–	3227,–
DGS 1200, painted	A	2924,–	504,–	3428,–

Prices in EUR, valid EXW DE-46354 Südlohn, DE-38820 Halberstadt, unpacked
Freight charges valid CPT Norway, islands and oversea territories excluded

BAUER GmbH
Eichendorffstr. 62
46354 Südlohn, Germany

Tel. +49 2862 70 90
info@bauer-suedlohn.com
www.bauer-suedlohn.com

Geschäftsführer
Patrick Bauer, Pascal Bauer
Amtsgericht Coesfeld HRB 5259

TÜVNORD
TÜV NORD CERT GmbH
DIN EN ISO 9001
tuev-nord.de

Price List 0726 en-NO
Forklift Truck Attachments

Tilting Container Type DUO	Category	Price	Freight charges	Price including freight charges
DUO, painted	A	1867,–	400,–	2267,–
Lid, galvanized	A	236,–	27,–	263,–
Castor Set, polyamide, Load capacity 1350 kg / castor set	A	192,–	15,–	207,–
Set of 5 self-adhesive stickers with symbols for: glass, paper, plastic, metal, residual waste	A	29,–	on request	on request

Tilting Container Type EXPO®	Category	Price	Freight charges	Price including freight charges
EXPO 150, painted	A	608,–	182,–	790,–
Lid, galvanized	A	174,–	18,–	192,–
Castor Set, polyamide, Load capacity 1050 kg / castor set	A	156,–	15,–	171,–
Skip Body Welded Oil and Watertight	A	78,–	0,–	78,–
EXPO 150, hot-dip galvanized	A	717,–	182,–	899,–
Lid, galvanized	A	174,–	18,–	192,–
Castor Set, polyamide, Load capacity 1050 kg / castor set	A	156,–	15,–	171,–
Skip Body Welded Oil and Watertight	A	78,–	0,–	78,–
EXPO 225, painted	A	662,–	182,–	844,–
Lid, galvanized	A	174,–	18,–	192,–
Castor Set, polyamide, Load capacity 1050 kg / castor set	A	156,–	15,–	171,–
Skip Body Welded Oil and Watertight	A	78,–	0,–	78,–
EXPO 225, hot-dip galvanized	A	785,–	182,–	967,–
Lid, galvanized	A	174,–	18,–	192,–
Castor Set, polyamide, Load capacity 1050 kg / castor set	A	156,–	15,–	171,–
Skip Body Welded Oil and Watertight	A	78,–	0,–	78,–
EXPO 275, painted	A	691,–	182,–	873,–
Lid, galvanized	A	174,–	18,–	192,–
Castor Set, polyamide, Load capacity 1050 kg / castor set	A	156,–	15,–	171,–
Skip Body Welded Oil and Watertight	A	78,–	0,–	78,–
EXPO 275, hot-dip galvanized	A	826,–	182,–	1008,–
Lid, galvanized	A	174,–	18,–	192,–
Castor Set, polyamide, Load capacity 1050 kg / castor set	A	156,–	15,–	171,–
Skip Body Welded Oil and Watertight	A	78,–	0,–	78,–
EXPO 300, painted	A	623,–	266,–	889,–
Lid, galvanized	A	174,–	18,–	192,–
Castor Set, polyamide, Load capacity 1350 kg / castor set	A	192,–	15,–	207,–
Skip Body Welded Oil and Watertight	A	78,–	0,–	78,–
EXPO 300, hot-dip galvanized	A	798,–	266,–	1064,–
Lid, galvanized	A	174,–	18,–	192,–
Castor Set, polyamide, Load capacity 1350 kg / castor set	A	192,–	15,–	207,–
Skip Body Welded Oil and Watertight	A	78,–	0,–	78,–
EXPO 600, painted	A	733,–	266,–	999,–
Lid, galvanized	A	196,–	22,–	218,–
Castor Set, polyamide, Load capacity 1350 kg / castor set	A	192,–	15,–	207,–
Skip Body Welded Oil and Watertight	A	78,–	0,–	78,–
EXPO 600, hot-dip galvanized	A	879,–	266,–	1145,–
Lid, galvanized	A	196,–	22,–	218,–
Castor Set, polyamide, Load capacity 1350 kg / castor set	A	192,–	15,–	207,–
Skip Body Welded Oil and Watertight	A	78,–	0,–	78,–

Prices in EUR, valid EXW DE-46354 Südlohn, DE-38820 Halberstadt, unpacked
Freight charges valid CPT Norway, islands and oversea territories excluded

BAUER GmbH
Eichendorffstr. 62
46354 Südlohn, Germany

Tel. +49 2862 70 90
info@bauer-suedlohn.com
www.bauer-suedlohn.com

Geschäftsführer
Patrick Bauer, Pascal Bauer
Amtsgericht Coesfeld HRB 5259

TÜVNORD
TÜV NORD CERT GmbH
DIN EN ISO 9001
tuev-nord.de

Price List 0726 en-NO
Forklift Truck Attachments

Tilting Container Type EXPO®	Category	Price	Freight charges	Price including freight charges
EXPO 900, painted	A	818,–	266,–	1084,–
Lid, galvanized	A	223,–	27,–	250,–
Castor Set, polyamide, Load capacity 1350 kg / castor set	A	192,–	15,–	207,–
Skip Body Welded Oil and Watertight	A	78,–	0,–	78,–
EXPO 900, hot-dip galvanized	A	964,–	266,–	1230,–
Lid, galvanized	A	223,–	27,–	250,–
Castor Set, polyamide, Load capacity 1350 kg / castor set	A	192,–	15,–	207,–
Skip Body Welded Oil and Watertight	A	78,–	0,–	78,–
EXPO 1200, painted	A	885,–	400,–	1285,–
Lid, galvanized	A	223,–	26,–	249,–
Castor Set, polyamide, Load capacity 1350 kg / castor set	A	192,–	15,–	207,–
Skip Body Welded Oil and Watertight	A	121,–	0,–	121,–
EXPO 1200, hot-dip galvanized	A	1042,–	400,–	1442,–
Lid, galvanized	A	223,–	26,–	249,–
Castor Set, polyamide, Load capacity 1350 kg / castor set	A	192,–	15,–	207,–
Skip Body Welded Oil and Watertight	A	121,–	0,–	121,–
EXPO 1700, painted	A	1202,–	400,–	1602,–
Lid, galvanized	A	276,–	33,–	309,–
Castor Set, polyamide, Load capacity 1350 kg / castor set	A	192,–	15,–	207,–
Skip Body Welded Oil and Watertight	A	121,–	0,–	121,–
EXPO 1700, hot-dip galvanized	A	1435,–	400,–	1835,–
Lid, galvanized	A	276,–	33,–	309,–
Castor Set, polyamide, Load capacity 1350 kg / castor set	A	192,–	15,–	207,–
Skip Body Welded Oil and Watertight	A	121,–	0,–	121,–
EXPO 2100, painted	A	1325,–	400,–	1725,–
Lid, galvanized	A	360,–	36,–	396,–
Castor Set, polyamide, Load capacity 1350 kg / castor set	A	192,–	15,–	207,–
Skip Body Welded Oil and Watertight	A	121,–	0,–	121,–
EXPO 2100, hot-dip galvanized	A	1606,–	400,–	2006,–
Lid, galvanized	A	360,–	36,–	396,–
Castor Set, polyamide, Load capacity 1350 kg / castor set	A	192,–	15,–	207,–
Skip Body Welded Oil and Watertight	A	121,–	0,–	121,–

Swarf Tilting Container Type EXPO®-E	Category	Price	Freight charges	Price including freight charges
EXPO-E 150, painted	A	729,–	182,–	911,–
Lid, galvanized	A	174,–	18,–	192,–
Castor Set, polyamide, Load capacity 1050 kg / castor set	A	156,–	15,–	171,–
EXPO-E 150, hot-dip galvanized	A	837,–	182,–	1019,–
Lid, galvanized	A	174,–	18,–	192,–
Castor Set, polyamide, Load capacity 1050 kg / castor set	A	156,–	15,–	171,–
EXPO-E 225, painted	A	782,–	182,–	964,–
Lid, galvanized	A	174,–	18,–	192,–
Castor Set, polyamide, Load capacity 1050 kg / castor set	A	156,–	15,–	171,–
EXPO-E 225, hot-dip galvanized	A	907,–	182,–	1089,–
Lid, galvanized	A	174,–	18,–	192,–
Castor Set, polyamide, Load capacity 1050 kg / castor set	A	156,–	15,–	171,–

Prices in EUR, valid EXW DE-46354 Südlohn, DE-38820 Halberstadt, unpacked
Freight charges valid CPT Norway, islands and oversea territories excluded

BAUER GmbH
Eichendorffstr. 62
46354 Südlohn, Germany

Tel. +49 2862 70 90
info@bauer-suedlohn.com
www.bauer-suedlohn.com

Geschäftsführer
Patrick Bauer, Pascal Bauer
Amtsgericht Coesfeld HRB 5259

TÜVNORD
TÜV NORD CERT GmbH
DIN EN ISO 9001
tuev-nord.de

Price List 0726 en-NO
Forklift Truck Attachments

Swarf Tilting Container Type EXPO®-E	Category	Price	Freight charges	Price including freight charges
EXPO-E 275, painted	A	812,–	182,–	994,–
Lid, galvanized	A	174,–	18,–	192,–
Castor Set, polyamide, Load capacity 1050 kg / castor set	A	156,–	15,–	171,–
EXPO-E 275, hot-dip galvanized	A	944,–	182,–	1126,–
Lid, galvanized	A	174,–	18,–	192,–
Castor Set, polyamide, Load capacity 1050 kg / castor set	A	156,–	15,–	171,–
EXPO-E 300, painted	A	744,–	266,–	1010,–
Lid, galvanized	A	174,–	18,–	192,–
Castor Set, polyamide, Load capacity 1350 kg / castor set	A	192,–	15,–	207,–
EXPO-E 300, hot-dip galvanized	A	919,–	266,–	1185,–
Lid, galvanized	A	174,–	18,–	192,–
Castor Set, polyamide, Load capacity 1350 kg / castor set	A	192,–	15,–	207,–
EXPO-E 600, painted	A	853,–	266,–	1119,–
Lid, galvanized	A	196,–	22,–	218,–
Castor Set, polyamide, Load capacity 1350 kg / castor set	A	192,–	15,–	207,–
EXPO-E 600, hot-dip galvanized	A	999,–	266,–	1265,–
Lid, galvanized	A	196,–	22,–	218,–
Castor Set, polyamide, Load capacity 1350 kg / castor set	A	192,–	15,–	207,–
EXPO-E 900, painted	A	938,–	266,–	1204,–
Lid, galvanized	A	223,–	27,–	250,–
Castor Set, polyamide, Load capacity 1350 kg / castor set	A	192,–	15,–	207,–
EXPO-E 900, hot-dip galvanized	A	1085,–	266,–	1351,–
Lid, galvanized	A	223,–	27,–	250,–
Castor Set, polyamide, Load capacity 1350 kg / castor set	A	192,–	15,–	207,–
EXPO-E 1200, painted	A	1048,–	400,–	1448,–
Lid, galvanized	A	223,–	26,–	249,–
Castor Set, polyamide, Load capacity 1350 kg / castor set	A	192,–	15,–	207,–
EXPO-E 1200, hot-dip galvanized	A	1204,–	400,–	1604,–
Lid, galvanized	A	223,–	26,–	249,–
Castor Set, polyamide, Load capacity 1350 kg / castor set	A	192,–	15,–	207,–
EXPO-E 1700, painted	A	1365,–	400,–	1765,–
Lid, galvanized	A	276,–	33,–	309,–
Castor Set, polyamide, Load capacity 1350 kg / castor set	A	192,–	15,–	207,–
EXPO-E 1700, hot-dip galvanized	A	1598,–	400,–	1998,–
Lid, galvanized	A	276,–	33,–	309,–
Castor Set, polyamide, Load capacity 1350 kg / castor set	A	192,–	15,–	207,–
EXPO-E 2100, painted	A	1488,–	400,–	1888,–
Lid, galvanized	A	360,–	36,–	396,–
Castor Set, polyamide, Load capacity 1350 kg / castor set	A	192,–	15,–	207,–
EXPO-E 2100, hot-dip galvanized	A	1768,–	400,–	2168,–
Lid, galvanized	A	360,–	36,–	396,–
Castor Set, polyamide, Load capacity 1350 kg / castor set	A	192,–	15,–	207,–

Container With Drop Away Base Type FB	Category	Price	Freight charges	Price including freight charges
FB 500, painted	A	809,–	266,–	1075,–
Lid, galvanized	A	196,–	15,–	211,–

Prices in EUR, valid EXW DE-46354 Südlohn, DE-38820 Halberstadt, unpacked
Freight charges valid CPT Norway, islands and oversea territories excluded

BAUER GmbH
Eichendorffstr. 62
46354 Südlohn, Germany

Tel. +49 2862 70 90
info@bauer-suedlohn.com
www.bauer-suedlohn.com

Geschäftsführer
Patrick Bauer, Pascal Bauer
Amtsgericht Coesfeld HRB 5259

TÜVNORD
TÜV NORD CERT GmbH
DIN EN ISO 9001
tuev-nord.de

Price List 0726 en-NO
Forklift Truck Attachments

Container With Drop Away Base Type FB	Category	Price	Freight charges	Price including freight charges
Castor Set, polyamide, Load capacity 1350 kg / castor set	A	192,–	15,–	207,–
Guiding Plates, galvanized	A	116,–	12,–	128,–
FB 500, hot-dip galvanized	A	994,–	266,–	1260,–
Lid, galvanized	A	196,–	15,–	211,–
Castor Set, polyamide, Load capacity 1350 kg / castor set	A	192,–	15,–	207,–
Guiding Plates, galvanized	A	116,–	12,–	128,–
FB 750, painted	A	880,–	266,–	1146,–
Lid, galvanized	A	196,–	15,–	211,–
Castor Set, polyamide, Load capacity 1350 kg / castor set	A	192,–	15,–	207,–
Guiding Plates, galvanized	A	116,–	12,–	128,–
FB 750, hot-dip galvanized	A	1075,–	266,–	1341,–
Lid, galvanized	A	196,–	15,–	211,–
Castor Set, polyamide, Load capacity 1350 kg / castor set	A	192,–	15,–	207,–
Guiding Plates, galvanized	A	116,–	12,–	128,–
FB 1000, painted	A	942,–	266,–	1208,–
Lid, galvanized	A	238,–	18,–	256,–
Castor Set, polyamide, Load capacity 1350 kg / castor set	A	192,–	15,–	207,–
Guiding Plates, galvanized	A	116,–	12,–	128,–
FB 1000, hot-dip galvanized	A	1157,–	266,–	1423,–
Lid, galvanized	A	238,–	18,–	256,–
Castor Set, polyamide, Load capacity 1350 kg / castor set	A	192,–	15,–	207,–
Guiding Plates, galvanized	A	116,–	12,–	128,–
FB 1500, painted	A	1105,–	400,–	1505,–
Lid, galvanized	A	351,–	21,–	372,–
Castor Set, polyamide, Load capacity 1350 kg / castor set	A	192,–	15,–	207,–
Guiding Plates, galvanized	A	116,–	12,–	128,–
FB 1500, hot-dip galvanized	A	1392,–	400,–	1792,–
Lid, galvanized	A	351,–	21,–	372,–
Castor Set, polyamide, Load capacity 1350 kg / castor set	A	192,–	15,–	207,–
Guiding Plates, galvanized	A	116,–	12,–	128,–
FB 2000, painted	A	1192,–	400,–	1592,–
Lid, galvanized	A	351,–	21,–	372,–
Castor Set, polyamide, Load capacity 1350 kg / castor set	A	192,–	15,–	207,–
Guiding Plates, galvanized	A	116,–	12,–	128,–
FB 2000, hot-dip galvanized	A	1512,–	400,–	1912,–
Lid, galvanized	A	351,–	21,–	372,–
Castor Set, polyamide, Load capacity 1350 kg / castor set	A	192,–	15,–	207,–
Guiding Plates, galvanized	A	116,–	12,–	128,–

Drum Tipper Type FD/L-HK	Category	Price	Freight charges	Price including freight charges
FD/L-HK, painted	B	2324,–	266,–	2590,–
FD/L-HK, hot-dip galvanized	B	2765,–	266,–	3031,–

Drum Tipper Type FD/L-K	Category	Price	Freight charges	Price including freight charges
FD/L-K, painted	B	2515,–	266,–	2781,–

Prices in EUR, valid EXW DE-46354 Südlohn, DE-38820 Halberstadt, unpacked
Freight charges valid CPT Norway, islands and oversea territories excluded

BAUER GmbH
Eichendorffstr. 62
46354 Südlohn, Germany

Tel. +49 2862 70 90
info@bauer-suedlohn.com
www.bauer-suedlohn.com

Geschäftsführer
Patrick Bauer, Pascal Bauer
Amtsgericht Coesfeld HRB 5259

TÜVNORD
TÜV NORD CERT GmbH
DIN EN ISO 9001
tuev-nord.de

Price List 0726 en-NO
Forklift Truck Attachments

Drum Tipper Type FD/L-K	Category	Price	Freight charges	Price including freight charges
FD/L-K, hot-dip galvanized	B	2965,–	266,–	3231,–

Drum Tipper Type FD-H	Category	Price	Freight charges	Price including freight charges
FD-H, painted	B	2593,–	182,–	2775,–
FD-H, hot-dip galvanized	B	2828,–	182,–	3010,–

Drum Tipper Type FD-HK	Category	Price	Freight charges	Price including freight charges
FD-HK, painted	B	1997,–	182,–	2179,–
FD-HK, hot-dip galvanized	B	2237,–	182,–	2419,–

Drum Tipper Type FD-K	Category	Price	Freight charges	Price including freight charges
FD-K, painted	B	2188,–	182,–	2370,–
FD-K, hot-dip galvanized	B	2437,–	182,–	2619,–

Drum Tipper Type FD-SK	Category	Price	Freight charges	Price including freight charges
FD-SK, painted	B	1997,–	182,–	2179,–
FD-SK, hot-dip galvanized	B	2237,–	182,–	2419,–

Drum Jack Type FH	Category	Price	Freight charges	Price including freight charges
FH-I 120, painted	B	1645,–	182,–	1827,–
FH-I 120, hot-dip galvanized	B	1823,–	182,–	2005,–
FH-I 220, painted	B	1645,–	182,–	1827,–
FH-I 220, hot-dip galvanized	B	1852,–	182,–	2034,–
FH-II 120, painted	B	2402,–	182,–	2584,–
FH-II 120, hot-dip galvanized	B	2673,–	182,–	2855,–
FH-II 220, painted	B	2402,–	182,–	2584,–
FH-II 220, hot-dip galvanized	B	2729,–	182,–	2911,–

Drum Gripper Type FK	Category	Price	Freight charges	Price including freight charges
FK-I, painted	B	1251,–	182,–	1433,–
FK-I, hot-dip galvanized	B	1524,–	182,–	1706,–
FK-II, painted	B	1488,–	266,–	1754,–
FK-II, hot-dip galvanized	B	1882,–	266,–	2148,–

Drum Clamp Type FKL	Category	Price	Freight charges	Price including freight charges
FKL, painted	B	480,–	70,–	550,–

Drum Tipper Type FLEX-HK	Category	Price	Freight charges	Price including freight charges
FLEX-HK, painted	B	2164,–	182,–	2346,–
Shelf Drum Pallet RP, galvanized	B	145,–	70,–	215,–
FLEX-HK, hot-dip galvanized	B	2338,–	182,–	2520,–
Shelf Drum Pallet RP, galvanized	B	145,–	70,–	215,–

Prices in EUR, valid EXW DE-46354 Südlohn, DE-38820 Halberstadt, unpacked
Freight charges valid CPT Norway, islands and oversea territories excluded

BAUER GmbH
Eichendorffstr. 62
46354 Südlohn, Germany

Tel. +49 2862 70 90
info@bauer-suedlohn.com
www.bauer-suedlohn.com

Geschäftsführer
Patrick Bauer, Pascal Bauer
Amtsgericht Coesfeld HRB 5259

TÜVNORD
TÜV NORD CERT GmbH
DIN EN ISO 9001
tuev-nord.de

Price List 0726 en-NO
Forklift Truck Attachments

Drum Tipper Type FLEX-K	Category	Price	Freight charges	Price including freight charges
FLEX-K, painted	B	2363,–	182,–	2545,–
Shelf Drum Pallet RP, galvanized	B	145,–	70,–	215,–
FLEX-K, hot-dip galvanized	B	2533,–	182,–	2715,–
Shelf Drum Pallet RP, galvanized	B	145,–	70,–	215,–

Drum Traverse Type FT/M	Category	Price	Freight charges	Price including freight charges
FT/M, galvanized	B	316,–	70,–	386,–

Drum Traverse Type FT/MK	Category	Price	Freight charges	Price including freight charges
FT/MK, galvanized	B	362,–	70,–	432,–

Drum Turner Type FW	Category	Price	Freight charges	Price including freight charges
FW-I, painted	B	1389,–	266,–	1655,–
FW-I, hot-dip galvanized	B	1803,–	266,–	2069,–
FW-II, painted	B	1945,–	266,–	2211,–
FW-II, hot-dip galvanized	B	2533,–	266,–	2799,–

Drum Turning Claw Type FWZ	Category	Price	Freight charges	Price including freight charges
FWZ-60, painted	B	1355,–	182,–	1537,–
FWZ-60, galvanized	B	1335,–	182,–	1517,–
FWZ-200, painted	B	1397,–	182,–	1579,–
FWZ-200, galvanized	B	1376,–	182,–	1558,–

Fork Extensions Type GG	Category	Price	Freight charges	Price including freight charges
GG 80/40 (1600 mm long), painted	A	541,–	182,–	723,–
GG 80/40 (1800 mm long), painted	A	570,–	182,–	752,–
GG 80/40 (2000 mm long), painted	A	601,–	182,–	783,–
GG 100/40 (1600 mm long), painted	A	541,–	182,–	723,–
GG 100/40 (1800 mm long), painted	A	570,–	182,–	752,–
GG 100/40 (2000 mm long), painted	A	601,–	182,–	783,–
GG 100/45 (1600 mm long), painted	A	541,–	182,–	723,–
GG 100/45 (1800 mm long), painted	A	570,–	182,–	752,–
GG 100/45 (2000 mm long), painted	A	601,–	182,–	783,–
GG 100/50 (1600 mm long), painted	A	541,–	182,–	723,–
GG 100/50 (1800 mm long), painted	A	570,–	182,–	752,–
GG 100/50 (2000 mm long), painted	A	601,–	266,–	867,–
GG 120/40 (1600 mm long), painted	A	570,–	182,–	752,–
GG 120/40 (1800 mm long), painted	A	601,–	266,–	867,–
GG 120/40 (2000 mm long), painted	A	645,–	266,–	911,–
GG 120/50 (1600 mm long), painted	A	570,–	182,–	752,–
GG 120/50 (1800 mm long), painted	A	601,–	266,–	867,–
GG 120/50 (2000 mm long), painted	A	645,–	266,–	911,–
GG 125/45 (1600 mm long), painted	A	570,–	182,–	752,–
GG 125/45 (1800 mm long), painted	A	601,–	266,–	867,–
GG 125/45 (2000 mm long), painted	A	645,–	266,–	911,–

Prices in EUR, valid EXW DE-46354 Südlohn, DE-38820 Halberstadt, unpacked
Freight charges valid CPT Norway, islands and oversea territories excluded

BAUER GmbH
Eichendorffstr. 62
46354 Südlohn, Germany

Tel. +49 2862 70 90
info@bauer-suedlohn.com
www.bauer-suedlohn.com

Geschäftsführer
Patrick Bauer, Pascal Bauer
Amtsgericht Coesfeld HRB 5259

TÜVNORD
TÜV NORD CERT GmbH
DIN EN ISO 9001
tuev-nord.de

Price List 0726 en-NO
Forklift Truck Attachments

Fork Extensions Type GG	Category	Price	Freight charges	Price including freight charges
GG 125/50 (1600 mm long), painted	A	570,–	182,–	752,–
GG 125/50 (1800 mm long), painted	A	601,–	266,–	867,–
GG 125/50 (2000 mm long), painted	A	645,–	266,–	911,–
GG 150/50 (1600 mm long), painted	A	634,–	266,–	900,–
GG 150/50 (1800 mm long), painted	A	680,–	266,–	946,–
GG 150/50 (2000 mm long), painted	A	713,–	266,–	979,–
GG 150/70 (1600 mm long), painted	A	634,–	266,–	900,–
GG 150/70 (1800 mm long), painted	A	680,–	266,–	946,–
GG 150/70 (2000 mm long), painted	A	713,–	266,–	979,–

Fork Extensions Type GO	Category	Price	Freight charges	Price including freight charges
GO 80/40 (1600 mm long), painted	A	390,–	182,–	572,–
GO 80/40 (1800 mm long), painted	A	396,–	182,–	578,–
GO 80/40 (2000 mm long), painted	A	411,–	182,–	593,–
GO 100/40 (1600 mm long), painted	A	390,–	182,–	572,–
GO 100/40 (1800 mm long), painted	A	396,–	182,–	578,–
GO 100/40 (2000 mm long), painted	A	411,–	182,–	593,–
GO 100/45 (1600 mm long), painted	A	390,–	182,–	572,–
GO 100/45 (1800 mm long), painted	A	396,–	182,–	578,–
GO 100/45 (2000 mm long), painted	A	411,–	182,–	593,–
GO 100/50 (1600 mm long), painted	A	390,–	182,–	572,–
GO 100/50 (1800 mm long), painted	A	396,–	182,–	578,–
GO 100/50 (2000 mm long), painted	A	411,–	182,–	593,–
GO 120/40 (1600 mm long), painted	A	396,–	182,–	578,–
GO 120/40 (1800 mm long), painted	A	418,–	182,–	600,–
GO 120/40 (2000 mm long), painted	A	435,–	182,–	617,–
GO 120/50 (1600 mm long), painted	A	396,–	182,–	578,–
GO 120/50 (1800 mm long), painted	A	418,–	182,–	600,–
GO 120/50 (2000 mm long), painted	A	435,–	182,–	617,–
GO 125/45 (1600 mm long), painted	A	396,–	182,–	578,–
GO 125/45 (1800 mm long), painted	A	418,–	182,–	600,–
GO 125/45 (2000 mm long), painted	A	435,–	182,–	617,–
GO 125/50 (1600 mm long), painted	A	396,–	182,–	578,–
GO 125/50 (1800 mm long), painted	A	418,–	182,–	600,–
GO 125/50 (2000 mm long), painted	A	435,–	182,–	617,–
GO 150/50 (1600 mm long), painted	A	475,–	182,–	657,–
GO 150/50 (1800 mm long), painted	A	516,–	182,–	698,–
GO 150/50 (2000 mm long), painted	A	555,–	182,–	737,–
GO 150/70 (1600 mm long), painted	A	475,–	182,–	657,–
GO 150/70 (1800 mm long), painted	A	516,–	182,–	698,–
GO 150/70 (2000 mm long), painted	A	555,–	182,–	737,–

Tilting Container Type GU	Category	Price	Freight charges	Price including freight charges
GU 300, painted	A	655,–	266,–	921,–
Lid, galvanized	A	98,–	18,–	116,–

Prices in EUR, valid EXW DE-46354 Südlohn, DE-38820 Halberstadt, unpacked
Freight charges valid CPT Norway, islands and oversea territories excluded

BAUER GmbH
Eichendorffstr. 62
46354 Südlohn, Germany

Tel. +49 2862 70 90
info@bauer-suedlohn.com
www.bauer-suedlohn.com

Geschäftsführer
Patrick Bauer, Pascal Bauer
Amtsgericht Coesfeld HRB 5259

TÜVNORD
TÜV NORD CERT GmbH
DIN EN ISO 9001
tuev-nord.de

Price List 0726 en-NO
Forklift Truck Attachments

Tilting Container Type GU	Category	Price	Freight charges	Price including freight charges
Castor Set, polyamide, Load capacity 1350 kg / castor set	A	192,–	15,–	207,–
Skip Body Welded Oil and Watertight	A	78,–	0,–	78,–
Crane lifting eyes for use with a crane	A	106,–	8,–	114,–
Support legs, 100 mm ground leeway	A	70,–	8,–	78,–
GU 300, hot-dip galvanized	A	866,–	266,–	1132,–
Lid, galvanized	A	98,–	18,–	116,–
Castor Set, polyamide, Load capacity 1350 kg / castor set	A	192,–	15,–	207,–
Skip Body Welded Oil and Watertight	A	78,–	0,–	78,–
Crane lifting eyes for use with a crane	A	106,–	8,–	114,–
Support legs, 100 mm ground leeway	A	70,–	8,–	78,–
GU 500, painted	A	891,–	266,–	1157,–
Lid, galvanized	A	98,–	18,–	116,–
Castor Set, polyamide, Load capacity 1350 kg / castor set	A	192,–	15,–	207,–
Skip Body Welded Oil and Watertight	A	78,–	0,–	78,–
Adjustable dumping brake	A	464,–	10,–	474,–
Crane lifting eyes for use with a crane	A	106,–	8,–	114,–
Support legs, 100 mm ground leeway	A	70,–	8,–	78,–
GU 500, hot-dip galvanized	A	1160,–	266,–	1426,–
Lid, galvanized	A	98,–	18,–	116,–
Castor Set, polyamide, Load capacity 1350 kg / castor set	A	192,–	15,–	207,–
Skip Body Welded Oil and Watertight	A	78,–	0,–	78,–
Adjustable dumping brake	A	464,–	10,–	474,–
Crane lifting eyes for use with a crane	A	106,–	8,–	114,–
Support legs, 100 mm ground leeway	A	70,–	8,–	78,–
GU 750, painted	A	1052,–	266,–	1318,–
Lid, galvanized	A	139,–	26,–	165,–
Castor Set, polyamide, Load capacity 1350 kg / castor set	A	192,–	15,–	207,–
Skip Body Welded Oil and Watertight	A	78,–	0,–	78,–
Adjustable dumping brake	A	464,–	10,–	474,–
Crane lifting eyes for use with a crane	A	106,–	8,–	114,–
Support legs, 100 mm ground leeway	A	70,–	8,–	78,–
GU 750, hot-dip galvanized	A	1371,–	266,–	1637,–
Lid, galvanized	A	139,–	26,–	165,–
Castor Set, polyamide, Load capacity 1350 kg / castor set	A	192,–	15,–	207,–
Skip Body Welded Oil and Watertight	A	78,–	0,–	78,–
Adjustable dumping brake	A	464,–	10,–	474,–
Crane lifting eyes for use with a crane	A	106,–	8,–	114,–
Support legs, 100 mm ground leeway	A	70,–	8,–	78,–
GU 1000, painted	A	1163,–	266,–	1429,–
Lid, galvanized	A	192,–	27,–	219,–
Castor Set, polyamide, Load capacity 1350 kg / castor set	A	192,–	15,–	207,–
Skip Body Welded Oil and Watertight	A	121,–	0,–	121,–
Adjustable dumping brake	A	464,–	10,–	474,–
Crane lifting eyes for use with a crane	A	106,–	8,–	114,–
Support legs, 100 mm ground leeway	A	70,–	8,–	78,–
GU 1000, hot-dip galvanized	A	1647,–	400,–	2047,–

Prices in EUR, valid EXW DE-46354 Südlohn, DE-38820 Halberstadt, unpacked
Freight charges valid CPT Norway, islands and oversea territories excluded

BAUER GmbH
Eichendorffstr. 62
46354 Südlohn, Germany

Tel. +49 2862 70 90
info@bauer-suedlohn.com
www.bauer-suedlohn.com

Geschäftsführer
Patrick Bauer, Pascal Bauer
Amtsgericht Coesfeld HRB 5259

TÜVNORD
TÜV NORD CERT GmbH
DIN EN ISO 9001
tuev-nord.de

Price List 0726 en-NO
Forklift Truck Attachments

Tilting Container Type GU	Category	Price	Freight charges	Price including freight charges
Lid, galvanized	A	192,–	27,–	219,–
Castor Set, polyamide, Load capacity 1350 kg / castor set	A	192,–	15,–	207,–
Skip Body Welded Oil and Watertight	A	121,–	0,–	121,–
Adjustable dumping brake	A	464,–	10,–	474,–
Crane lifting eyes for use with a crane	A	106,–	8,–	114,–
Support legs, 100 mm ground leeway	A	70,–	8,–	78,–
GU 1500, painted	A	1357,–	400,–	1757,–
Lid, galvanized	A	192,–	27,–	219,–
Castor Set, polyamide, Load capacity 1350 kg / castor set	A	192,–	15,–	207,–
Skip Body Welded Oil and Watertight	A	121,–	0,–	121,–
Adjustable dumping brake	A	464,–	10,–	474,–
Crane lifting eyes for use with a crane	A	106,–	8,–	114,–
Support legs, 100 mm ground leeway	A	70,–	8,–	78,–
GU 1500, hot-dip galvanized	A	1769,–	400,–	2169,–
Lid, galvanized	A	192,–	27,–	219,–
Castor Set, polyamide, Load capacity 1350 kg / castor set	A	192,–	15,–	207,–
Skip Body Welded Oil and Watertight	A	121,–	0,–	121,–
Adjustable dumping brake	A	464,–	10,–	474,–
Crane lifting eyes for use with a crane	A	106,–	8,–	114,–
Support legs, 100 mm ground leeway	A	70,–	8,–	78,–
GU 2000, painted	A	1675,–	400,–	2075,–
Lid, galvanized	A	226,–	32,–	258,–
Castor Set, polyamide, Load capacity 1350 kg / castor set	A	192,–	15,–	207,–
Skip Body Welded Oil and Watertight	A	121,–	0,–	121,–
Adjustable dumping brake	A	464,–	10,–	474,–
Crane lifting eyes for use with a crane	A	106,–	8,–	114,–
Support legs, 100 mm ground leeway	A	70,–	8,–	78,–
GU 2000, hot-dip galvanized	A	2200,–	400,–	2600,–
Lid, galvanized	A	226,–	32,–	258,–
Castor Set, polyamide, Load capacity 1350 kg / castor set	A	192,–	15,–	207,–
Skip Body Welded Oil and Watertight	A	121,–	0,–	121,–
Adjustable dumping brake	A	464,–	10,–	474,–
Crane lifting eyes for use with a crane	A	106,–	8,–	114,–
Support legs, 100 mm ground leeway	A	70,–	8,–	78,–

Swarf Tilting Container Type GU-E	Category	Price	Freight charges	Price including freight charges
GU-E 300, painted	A	775,–	266,–	1041,–
Lid, galvanized	A	98,–	18,–	116,–
Castor Set, polyamide, Load capacity 1350 kg / castor set	A	192,–	15,–	207,–
Crane lifting eyes for use with a crane	A	106,–	8,–	114,–
Support legs, 100 mm ground leeway	A	70,–	8,–	78,–
GU-E 300, hot-dip galvanized	A	986,–	266,–	1252,–
Lid, galvanized	A	98,–	18,–	116,–
Castor Set, polyamide, Load capacity 1350 kg / castor set	A	192,–	15,–	207,–
Crane lifting eyes for use with a crane	A	106,–	8,–	114,–
Support legs, 100 mm ground leeway	A	70,–	8,–	78,–

Prices in EUR, valid EXW DE-46354 Südlohn, DE-38820 Halberstadt, unpacked
Freight charges valid CPT Norway, islands and oversea territories excluded

BAUER GmbH
Eichendorffstr. 62
46354 Südlohn, Germany

Tel. +49 2862 70 90
info@bauer-suedlohn.com
www.bauer-suedlohn.com

Geschäftsführer
Patrick Bauer, Pascal Bauer
Amtsgericht Coesfeld HRB 5259

TÜVNORD
TÜV NORD CERT GmbH
DIN EN ISO 9001
tuev-nord.de

Price List 0726 en-NO
Forklift Truck Attachments

Swarf Tilting Container Type GU-E	Category	Price	Freight charges	Price including freight charges
GU-E 500, painted	A	1012,–	266,–	1278,–
Lid, galvanized	A	98,–	18,–	116,–
Castor Set, polyamide, Load capacity 1350 kg / castor set	A	192,–	15,–	207,–
Adjustable dumping brake	A	464,–	10,–	474,–
Crane lifting eyes for use with a crane	A	106,–	8,–	114,–
Support legs, 100 mm ground leeway	A	70,–	8,–	78,–
GU-E 500, hot-dip galvanized	A	1280,–	266,–	1546,–
Lid, galvanized	A	98,–	18,–	116,–
Castor Set, polyamide, Load capacity 1350 kg / castor set	A	192,–	15,–	207,–
Adjustable dumping brake	A	464,–	10,–	474,–
Crane lifting eyes for use with a crane	A	106,–	8,–	114,–
Support legs, 100 mm ground leeway	A	70,–	8,–	78,–
GU-E 750, painted	A	1172,–	266,–	1438,–
Lid, galvanized	A	139,–	26,–	165,–
Castor Set, polyamide, Load capacity 1350 kg / castor set	A	192,–	15,–	207,–
Adjustable dumping brake	A	464,–	10,–	474,–
Crane lifting eyes for use with a crane	A	106,–	8,–	114,–
Support legs, 100 mm ground leeway	A	70,–	8,–	78,–
GU-E 750, hot-dip galvanized	A	1491,–	266,–	1757,–
Lid, galvanized	A	139,–	26,–	165,–
Castor Set, polyamide, Load capacity 1350 kg / castor set	A	192,–	15,–	207,–
Adjustable dumping brake	A	464,–	10,–	474,–
Crane lifting eyes for use with a crane	A	106,–	8,–	114,–
Support legs, 100 mm ground leeway	A	70,–	8,–	78,–
GU-E 1000, painted	A	1325,–	266,–	1591,–
Lid, galvanized	A	192,–	27,–	219,–
Castor Set, polyamide, Load capacity 1350 kg / castor set	A	192,–	15,–	207,–
Adjustable dumping brake	A	464,–	10,–	474,–
Crane lifting eyes for use with a crane	A	106,–	8,–	114,–
Support legs, 100 mm ground leeway	A	70,–	8,–	78,–
GU-E 1000, hot-dip galvanized	A	1810,–	400,–	2210,–
Lid, galvanized	A	192,–	27,–	219,–
Castor Set, polyamide, Load capacity 1350 kg / castor set	A	192,–	15,–	207,–
Adjustable dumping brake	A	464,–	10,–	474,–
Crane lifting eyes for use with a crane	A	106,–	8,–	114,–
Support legs, 100 mm ground leeway	A	70,–	8,–	78,–
GU-E 1500, painted	A	1520,–	400,–	1920,–
Lid, galvanized	A	192,–	27,–	219,–
Castor Set, polyamide, Load capacity 1350 kg / castor set	A	192,–	15,–	207,–
Adjustable dumping brake	A	464,–	10,–	474,–
Crane lifting eyes for use with a crane	A	106,–	8,–	114,–
Support legs, 100 mm ground leeway	A	70,–	8,–	78,–
GU-E 1500, hot-dip galvanized	A	1932,–	400,–	2332,–
Lid, galvanized	A	192,–	27,–	219,–
Castor Set, polyamide, Load capacity 1350 kg / castor set	A	192,–	15,–	207,–
Adjustable dumping brake	A	464,–	10,–	474,–

Prices in EUR, valid EXW DE-46354 Südlohn, DE-38820 Halberstadt, unpacked
Freight charges valid CPT Norway, islands and oversea territories excluded

BAUER GmbH
Eichendorffstr. 62
46354 Südlohn, Germany

Tel. +49 2862 70 90
info@bauer-suedlohn.com
www.bauer-suedlohn.com

Geschäftsführer
Patrick Bauer, Pascal Bauer
Amtsgericht Coesfeld HRB 5259

TÜVNORD
TÜV NORD CERT GmbH
DIN EN ISO 9001
tuev-nord.de

Price List 0726 en-NO
Forklift Truck Attachments

Swarf Tilting Container Type GU-E	Category	Price	Freight charges	Price including freight charges
Crane lifting eyes for use with a crane	A	106,–	8,–	114,–
Support legs, 100 mm ground leeway	A	70,–	8,–	78,–
GU-E 2000, painted	A	1838,–	400,–	2238,–
Lid, galvanized	A	226,–	32,–	258,–
Castor Set, polyamide, Load capacity 1350 kg / castor set	A	192,–	15,–	207,–
Adjustable dumping brake	A	464,–	10,–	474,–
Crane lifting eyes for use with a crane	A	106,–	8,–	114,–
Support legs, 100 mm ground leeway	A	70,–	8,–	78,–
GU-E 2000, hot-dip galvanized	A	2362,–	400,–	2762,–
Lid, galvanized	A	226,–	32,–	258,–
Castor Set, polyamide, Load capacity 1350 kg / castor set	A	192,–	15,–	207,–
Adjustable dumping brake	A	464,–	10,–	474,–
Crane lifting eyes for use with a crane	A	106,–	8,–	114,–
Support legs, 100 mm ground leeway	A	70,–	8,–	78,–

Tilting Container Type GU-RZ	Category	Price	Freight charges	Price including freight charges
GU-RZ 30, painted	A	699,–	266,–	965,–
Lid, galvanized	A	95,–	18,–	113,–
GU-RZ 30, hot-dip galvanized	A	779,–	266,–	1045,–
Lid, galvanized	A	95,–	18,–	113,–
GU-RZ 55, painted	A	931,–	266,–	1197,–
Lid, galvanized	A	95,–	18,–	113,–
GU-RZ 55, hot-dip galvanized	A	1026,–	266,–	1292,–
Lid, galvanized	A	95,–	18,–	113,–

Fork Protection Type GZS	Category	Price	Freight charges	Price including freight charges
GZS, painted	F	179,–	70,–	249,–

Container With Drop Away Base Type HKB	Category	Price	Freight charges	Price including freight charges
HKB 60, painted	A	1078,–	266,–	1344,–
HKB 70, painted	A	1140,–	266,–	1406,–
HKB 90, painted	A	1417,–	266,–	1683,–

Shovel Type HVR	Category	Price	Freight charges	Price including freight charges
HVR 50, painted	A	3393,–	400,–	3793,–
HVR 75, painted	A	3976,–	504,–	4480,–
HVR 80 L, painted	A	4095,–	504,–	4599,–
HVR 100, painted	A	5033,–	683,–	5716,–
HVR 150, painted	A	6432,–	683,–	7115,–

Kippomat Type KG-A	Category	Price	Freight charges	Price including freight charges
KG-A, hot-dip galvanized	A	3218,–	400,–	3618,–

Kippomat Type KG-B	Category	Price	Freight charges	Price including freight charges
KG-B, hot-dip galvanized	A	3137,–	400,–	3537,–

Prices in EUR, valid EXW DE-46354 Südlohn, DE-38820 Halberstadt, unpacked
Freight charges valid CPT Norway, islands and oversea territories excluded

BAUER GmbH
Eichendorffstr. 62
46354 Südlohn, Germany

Tel. +49 2862 70 90
info@bauer-suedlohn.com
www.bauer-suedlohn.com

Geschäftsführer
Patrick Bauer, Pascal Bauer
Amtsgericht Coesfeld HRB 5259

TÜVNORD
TÜV NORD CERT GmbH
DIN EN ISO 9001
tuev-nord.de

Price List 0726 en-NO
Forklift Truck Attachments

Kippomat Type KG-C	Category	Price	Freight charges	Price including freight charges
KG-C, hot-dip galvanized	A	2081,–	266,–	2347,–

Tipping Skip Type KK	Category	Price	Freight charges	Price including freight charges
KK 250, painted	E	484,–	182,–	666,–
Lid, galvanized	E	136,–	15,–	151,–
Castor Set, polyamide, Load capacity 1050 kg / castor set	A	136,–	15,–	151,–
Castor Set, solid rubber, Load capacity 615 kg / castor set	E	103,–	15,–	118,–
KK 250, hot-dip galvanized	E	534,–	182,–	716,–
Lid, galvanized	E	136,–	15,–	151,–
Castor Set, polyamide, Load capacity 1050 kg / castor set	A	136,–	15,–	151,–
Castor Set, solid rubber, Load capacity 615 kg / castor set	E	103,–	15,–	118,–
KK 400, painted	E	551,–	182,–	733,–
Lid, galvanized	E	156,–	16,–	172,–
Castor Set, polyamide, Load capacity 1050 kg / castor set	A	136,–	15,–	151,–
Castor Set, solid rubber, Load capacity 615 kg / castor set	E	103,–	15,–	118,–
KK 400, hot-dip galvanized	E	600,–	182,–	782,–
Lid, galvanized	E	156,–	16,–	172,–
Castor Set, polyamide, Load capacity 1050 kg / castor set	A	136,–	15,–	151,–
Castor Set, solid rubber, Load capacity 615 kg / castor set	E	103,–	15,–	118,–
KK 600, painted	E	764,–	266,–	1030,–
Lid, galvanized	E	173,–	20,–	193,–
Castor Set, polyamide, Load capacity 1050 kg / castor set	A	136,–	15,–	151,–
Castor Set, solid rubber, Load capacity 615 kg / castor set	E	103,–	15,–	118,–
KK 600, hot-dip galvanized	E	865,–	266,–	1131,–
Castor Set, solid rubber, Load capacity 615 kg / castor set	E	103,–	15,–	118,–
Lid, galvanized	E	173,–	20,–	193,–
Castor Set, polyamide, Load capacity 1050 kg / castor set	A	136,–	15,–	151,–
KK 800, painted	E	823,–	266,–	1089,–
Lid, galvanized	E	181,–	21,–	202,–
Castor Set, polyamide, Load capacity 1050 kg / castor set	A	136,–	15,–	151,–
Castor Set, solid rubber, Load capacity 615 kg / castor set	E	103,–	15,–	118,–
KK 800, hot-dip galvanized	E	930,–	266,–	1196,–
Lid, galvanized	E	181,–	21,–	202,–
Castor Set, polyamide, Load capacity 1050 kg / castor set	A	136,–	15,–	151,–
Castor Set, solid rubber, Load capacity 615 kg / castor set	E	103,–	15,–	118,–
KK 1000, painted	E	881,–	266,–	1147,–
Lid, galvanized	E	193,–	22,–	215,–
Castor Set, polyamide, Load capacity 1050 kg / castor set	A	136,–	15,–	151,–
Castor Set, solid rubber, Load capacity 615 kg / castor set	E	103,–	15,–	118,–
KK 1000, hot-dip galvanized	E	1014,–	266,–	1280,–
Lid, galvanized	E	193,–	22,–	215,–
Castor Set, polyamide, Load capacity 1050 kg / castor set	A	136,–	15,–	151,–
Castor Set, solid rubber, Load capacity 615 kg / castor set	E	103,–	15,–	118,–

Prices in EUR, valid EXW DE-46354 Südlohn, DE-38820 Halberstadt, unpacked
Freight charges valid CPT Norway, islands and oversea territories excluded

BAUER GmbH
Eichendorffstr. 62
46354 Südlohn, Germany

Tel. +49 2862 70 90
info@bauer-suedlohn.com
www.bauer-suedlohn.com

Geschäftsführer
Patrick Bauer, Pascal Bauer
Amtsgericht Coesfeld HRB 5259

TÜVNORD
TÜV NORD CERT GmbH
DIN EN ISO 9001
tuev-nord.de

Price List 0726 en-NO
Forklift Truck Attachments

Kippomat Type KM	Category	Price	Freight charges	Price including freight charges
KM, hot-dip galvanized	A	3218,–	266,–	3484,–

Tipping Skip Type KN	Category	Price	Freight charges	Price including freight charges
KN 250, painted	E	484,–	182,–	666,–
Lid, galvanized	E	136,–	15,–	151,–
Castor Set, polyamide, Load capacity 1050 kg / castor set	A	136,–	15,–	151,–
Castor Set, solid rubber, Load capacity 615 kg / castor set	E	103,–	15,–	118,–
KN 250, hot-dip galvanized	E	534,–	182,–	716,–
Lid, galvanized	E	136,–	15,–	151,–
Castor Set, polyamide, Load capacity 1050 kg / castor set	A	136,–	15,–	151,–
Castor Set, solid rubber, Load capacity 615 kg / castor set	E	103,–	15,–	118,–
KN 400, painted	E	551,–	182,–	733,–
Lid, galvanized	E	156,–	16,–	172,–
Castor Set, polyamide, Load capacity 1050 kg / castor set	A	136,–	15,–	151,–
Castor Set, solid rubber, Load capacity 615 kg / castor set	E	103,–	15,–	118,–
KN 400, hot-dip galvanized	E	600,–	182,–	782,–
Lid, galvanized	E	156,–	16,–	172,–
Castor Set, polyamide, Load capacity 1050 kg / castor set	A	136,–	15,–	151,–
Castor Set, solid rubber, Load capacity 615 kg / castor set	E	103,–	15,–	118,–

Tipping Skip Type KS	Category	Price	Freight charges	Price including freight charges
KS 400, painted	E	900,–	266,–	1166,–
KS 550, painted	E	964,–	266,–	1230,–
KS 700, painted	E	1024,–	266,–	1290,–

Extensible Crane Arm Type KT	Category	Price	Freight charges	Price including freight charges
KT 2,5, painted	A	1448,–	266,–	1714,–
KT 2,5, hot-dip galvanized	A	1763,–	400,–	2163,–
KT 5,0, painted	A	1798,–	400,–	2198,–
KT 5,0, hot-dip galvanized	A	2242,–	400,–	2642,–

Extensible Crane Arm Type KTH	Category	Price	Freight charges	Price including freight charges
KTH 2,5, painted	A	1748,–	400,–	2148,–
KTH 2,5, hot-dip galvanized	A	2068,–	400,–	2468,–
KTH 5,0, painted	A	2012,–	400,–	2412,–
KTH 5,0, hot-dip galvanized	A	2373,–	400,–	2773,–

Extensible Crane Arm Type KTH-K	Category	Price	Freight charges	Price including freight charges
KTH-K 2,5, painted	A	1606,–	266,–	1872,–
KTH-K 2,5, hot-dip galvanized	A	1943,–	266,–	2209,–
KTH-K 5,0, painted	A	1852,–	266,–	2118,–
KTH-K 5,0, hot-dip galvanized	A	2232,–	400,–	2632,–

Extensible Crane Arm Type KT-K	Category	Price	Freight charges	Price including freight charges
KT-K 2,5, painted	A	1291,–	266,–	1557,–

Prices in EUR, valid EXW DE-46354 Südlohn, DE-38820 Halberstadt, unpacked
Freight charges valid CPT Norway, islands and oversea territories excluded

BAUER GmbH
Eichendorffstr. 62
46354 Südlohn, Germany

Tel. +49 2862 70 90
info@bauer-suedlohn.com
www.bauer-suedlohn.com

Geschäftsführer
Patrick Bauer, Pascal Bauer
Amtsgericht Coesfeld HRB 5259

TÜVNORD
TÜV NORD CERT GmbH
DIN EN ISO 9001
tuev-nord.de

Price List 0726 en-NO
Forklift Truck Attachments

Extensible Crane Arm Type KT-K	Category	Price	Freight charges	Price including freight charges
KT-K 2,5, hot-dip galvanized	A	1622,–	266,–	1888,–
KT-K 5,0, painted	A	1625,–	266,–	1891,–
KT-K 5,0, hot-dip galvanized	A	2092,–	266,–	2358,–

Barrow Tipper Type KW-ET	Category	Price	Freight charges	Price including freight charges
KW-ET 250, painted	E	588,–	182,–	770,–
Lid, galvanized	E	136,–	15,–	151,–
KW-ET 250, hot-dip galvanized	E	900,–	182,–	1082,–
Lid, galvanized	E	136,–	15,–	151,–
KW-ET 400, painted	E	648,–	182,–	830,–
Lid, galvanized	E	156,–	16,–	172,–
KW-ET 400, hot-dip galvanized	E	998,–	182,–	1180,–
Lid, galvanized	E	156,–	16,–	172,–
KW-ET 600, painted	E	808,–	266,–	1074,–
Lid, galvanized	E	173,–	20,–	193,–
KW-ET 600, hot-dip galvanized	E	1166,–	266,–	1432,–
Lid, galvanized	E	173,–	20,–	193,–
KW-ET 1000, painted	E	997,–	266,–	1263,–
Lid, galvanized	E	193,–	22,–	215,–
KW-ET 1000, hot-dip galvanized	E	1591,–	266,–	1857,–
Lid, galvanized	E	193,–	22,–	215,–

Loading Arm Type LA	Category	Price	Freight charges	Price including freight charges
LA 1600-1,0, painted	A	542,–	182,–	724,–
LA 1600-1,0, hot-dip galvanized	A	581,–	182,–	763,–
LA 1600-2,5, painted	A	786,–	182,–	968,–
LA 1600-2,5, hot-dip galvanized	A	927,–	182,–	1109,–
LA 1600-5,0, painted	A	1133,–	266,–	1399,–
LA 1600-5,0, hot-dip galvanized	A	1325,–	266,–	1591,–
LA 2400-1,0, painted	A	569,–	182,–	751,–
LA 2400-1,0, hot-dip galvanized	A	632,–	182,–	814,–
LA 2400-2,5, painted	A	877,–	266,–	1143,–
LA 2400-2,5, hot-dip galvanized	A	1017,–	266,–	1283,–
LA 2400-5,0, painted	A	1250,–	266,–	1516,–
LA 2400-5,0, hot-dip galvanized	A	1480,–	266,–	1746,–
LA 25-1,0, painted	A	632,–	182,–	814,–
LA 25-1,0, hot-dip galvanized	A	683,–	182,–	865,–

Loading Arm Type LAT	Category	Price	Freight charges	Price including freight charges
LAT 25-1,0, painted	A	766,–	182,–	948,–
LAT 25-1,0, hot-dip galvanized	A	838,–	182,–	1020,–

Scissor Gripper Type LG	Category	Price	Freight charges	Price including freight charges
LG 60, painted	B	245,–	70,–	315,–
LG 60, galvanized	B	223,–	70,–	293,–

Prices in EUR, valid EXW DE-46354 Südlohn, DE-38820 Halberstadt, unpacked
Freight charges valid CPT Norway, islands and oversea territories excluded

BAUER GmbH
Eichendorffstr. 62
46354 Südlohn, Germany

Tel. +49 2862 70 90
info@bauer-suedlohn.com
www.bauer-suedlohn.com

Geschäftsführer
Patrick Bauer, Pascal Bauer
Amtsgericht Coesfeld HRB 5259

TÜVNORD
TÜV NORD CERT GmbH
DIN EN ISO 9001
tuev-nord.de

Price List 0726 en-NO
Forklift Truck Attachments

Scissor Gripper Type LG	Category	Price	Freight charges	Price including freight charges
LG 200, painted	B	245,–	70,–	315,–
LG 200, galvanized	B	223,–	70,–	293,–

Container for Long Material Type LGK	Category	Price	Freight charges	Price including freight charges
LGK, painted	A	1376,–	266,–	1642,–
Castor Set, polyamide, Load capacity 1350 kg / castor set	A	192,–	15,–	207,–
LGK, hot-dip galvanized	A	1676,–	266,–	1942,–
Castor Set, polyamide, Load capacity 1350 kg / castor set	A	192,–	15,–	207,–

Long Material Carrier Type LGT	Category	Price	Freight charges	Price including freight charges
LGT 1,5, painted	A	1929,–	400,–	2329,–
LGT 1,5, hot-dip galvanized	A	2263,–	400,–	2663,–
LGT 2,5, painted	A	2164,–	on request	on request
LGT 2,5, hot-dip galvanized	A	2590,–	on request	on request
LGT 3,5, painted	A	2989,–	on request	on request
LGT 3,5, hot-dip galvanized	A	3670,–	on request	on request
LGT 4,5, painted	A	3302,–	on request	on request
LGT 4,5, hot-dip galvanized	A	4071,–	on request	on request

Drum Claw Type LGZ	Category	Price	Freight charges	Price including freight charges
LGZ 60, painted	B	225,–	70,–	295,–
LGZ 60, galvanized	B	211,–	70,–	281,–
LGZ 200, painted	B	225,–	70,–	295,–
LGZ 200, galvanized	B	211,–	70,–	281,–

Crane Hook Type LH	Category	Price	Freight charges	Price including freight charges
LH-I 1,0, painted	A	199,–	70,–	269,–
LH-I 1,0, hot-dip galvanized	A	223,–	70,–	293,–
LH-I 1,5, painted	A	218,–	70,–	288,–
LH-I 1,5, hot-dip galvanized	A	242,–	70,–	312,–
LH-I 2,0, painted	A	229,–	70,–	299,–
LH-I 2,0, hot-dip galvanized	A	254,–	70,–	324,–
LH-I 2,5, painted	A	255,–	70,–	325,–
LH-I 2,5, hot-dip galvanized	A	279,–	70,–	349,–
LH-I 3,0, painted	A	331,–	70,–	401,–
LH-I 3,0, hot-dip galvanized	A	356,–	70,–	426,–
LH-II 1,5, painted	A	329,–	70,–	399,–
LH-II 1,5, hot-dip galvanized	A	378,–	70,–	448,–
LH-II 2,5, painted	A	434,–	70,–	504,–
LH-II 2,5, hot-dip galvanized	A	516,–	70,–	586,–
LH-II 5,0, painted	A	720,–	182,–	902,–
LH-II 5,0, hot-dip galvanized	A	808,–	182,–	990,–
LH-II 7,5, painted	A	856,–	182,–	1038,–
LH-II 7,5, hot-dip galvanized	A	949,–	182,–	1131,–

Prices in EUR, valid EXW DE-46354 Südlohn, DE-38820 Halberstadt, unpacked
Freight charges valid CPT Norway, islands and oversea territories excluded

BAUER GmbH
Eichendorffstr. 62
46354 Südlohn, Germany

Tel. +49 2862 70 90
info@bauer-suedlohn.com
www.bauer-suedlohn.com

Geschäftsführer
Patrick Bauer, Pascal Bauer
Amtsgericht Coesfeld HRB 5259

TÜVNORD
TÜV NORD CERT GmbH
DIN EN ISO 9001
tuev-nord.de

Price List 0726 en-NO
Forklift Truck Attachments

Long Load Handler Type LSL	Category	Price	Freight charges	Price including freight charges
LSL, painted	A	1141,–	266,–	1407,–
LSL, hot-dip galvanized	A	1310,–	266,–	1576,–

Long Material Sidecar Type LSW	Category	Price	Freight charges	Price including freight charges
LSW 1,3, painted	A	953,–	182,–	1135,–
LSW 1,3, hot-dip galvanized	A	1017,–	266,–	1283,–
LSW 2,5, painted	A	1132,–	182,–	1314,–
LSW 2,5, hot-dip galvanized	A	1197,–	266,–	1463,–

Access Safety Platform Type MB-B	Category	Price	Freight charges	Price including freight charges
MB-B, painted	A	1085,–	266,–	1351,–
Castor Set, polyamide, Load capacity 1050 kg / castor set	A	136,–	15,–	151,–

Access Safety Platform Type MB-B/L	Category	Price	Freight charges	Price including freight charges
MB-B/L, painted	A	1274,–	266,–	1540,–
Castor Set, polyamide, Load capacity 1050 kg / castor set	A	136,–	15,–	151,–

Access Safety Platform Type MB-D	Category	Price	Freight charges	Price including freight charges
MB-D, painted	A	908,–	266,–	1174,–
Castor Set, polyamide, Load capacity 1050 kg / castor set	A	136,–	15,–	151,–

Access Safety Platform Type MB-D/L	Category	Price	Freight charges	Price including freight charges
MB-D/L, painted	A	1096,–	266,–	1362,–
Castor Set, polyamide, Load capacity 1050 kg / castor set	A	136,–	15,–	151,–

Access Safety Platform Type MB-F	Category	Price	Freight charges	Price including freight charges
MB-F, painted	A	1074,–	266,–	1340,–
Castor Set, polyamide, Load capacity 1050 kg / castor set	A	136,–	15,–	151,–

Access Safety Platform Type MB-II	Category	Price	Freight charges	Price including freight charges
MB-II, painted	A	994,–	266,–	1260,–
Castor Set, polyamide, Load capacity 1050 kg / castor set	A	136,–	15,–	151,–
MB-II, hot-dip galvanized	A	1171,–	266,–	1437,–
Castor Set, polyamide, Load capacity 1050 kg / castor set	A	136,–	15,–	151,–

Access Safety Platform Type MB-K-IV	Category	Price	Freight charges	Price including freight charges
MB-K-IV, painted	A	2012,–	320,–	2332,–

Access Safety Platform Type MB-ST	Category	Price	Freight charges	Price including freight charges
MB-ST, painted	A	2576,–	266,–	2842,–
Castor Set, polyamide, Load capacity 1050 kg / castor set	A	136,–	15,–	151,–

Access Safety Platform Type MB-ST/L	Category	Price	Freight charges	Price including freight charges
MB-ST/L, painted	A	2764,–	266,–	3030,–

Prices in EUR, valid EXW DE-46354 Südlohn, DE-38820 Halberstadt, unpacked
Freight charges valid CPT Norway, islands and oversea territories excluded

BAUER GmbH
Eichendorffstr. 62
46354 Südlohn, Germany

Tel. +49 2862 70 90
info@bauer-suedlohn.com
www.bauer-suedlohn.com

Geschäftsführer
Patrick Bauer, Pascal Bauer
Amtsgericht Coesfeld HRB 5259

TÜVNORD
TÜV NORD CERT GmbH
DIN EN ISO 9001
tuev-nord.de

Price List 0726 en-NO
Forklift Truck Attachments

Access Safety Platform Type MB-ST/L	Category	Price	Freight charges	Price including freight charges
Castor Set, polyamide, Load capacity 1050 kg / castor set	A	136,–	15,–	151,–

Access Safety Platform Type MB-ST/T	Category	Price	Freight charges	Price including freight charges
MB-ST/T, painted	A	2903,–	266,–	3169,–
Castor Set, polyamide, Load capacity 1050 kg / castor set	A	136,–	15,–	151,–

Access Safety Platform Type MB-ST/T/L	Category	Price	Freight charges	Price including freight charges
MB-ST/T/L, painted	A	3092,–	266,–	3358,–
Castor Set, polyamide, Load capacity 1050 kg / castor set	A	136,–	15,–	151,–

Mini Tilting Container Type MGU	Category	Price	Freight charges	Price including freight charges
MGU 230, painted	A	569,–	182,–	751,–
Lid, galvanized	A	131,–	18,–	149,–
Castor Set, polyamide, Load capacity 1050 kg / castor set	A	156,–	15,–	171,–
Skip Body Welded Oil and Watertight	A	78,–	0,–	78,–
MGU 230, hot-dip galvanized	A	655,–	266,–	921,–
Lid, galvanized	A	131,–	18,–	149,–
Castor Set, polyamide, Load capacity 1050 kg / castor set	A	156,–	15,–	171,–
Skip Body Welded Oil and Watertight	A	78,–	0,–	78,–
MGU 270, painted	A	621,–	266,–	887,–
Lid, galvanized	A	131,–	18,–	149,–
Castor Set, polyamide, Load capacity 1050 kg / castor set	A	156,–	15,–	171,–
Skip Body Welded Oil and Watertight	A	78,–	0,–	78,–
MGU 270, hot-dip galvanized	A	729,–	266,–	995,–
Lid, galvanized	A	131,–	18,–	149,–
Castor Set, polyamide, Load capacity 1050 kg / castor set	A	156,–	15,–	171,–
Skip Body Welded Oil and Watertight	A	78,–	0,–	78,–
MGU 460, painted	A	815,–	266,–	1081,–
Lid, galvanized	A	169,–	22,–	191,–
Castor Set, polyamide, Load capacity 1050 kg / castor set	A	156,–	15,–	171,–
Skip Body Welded Oil and Watertight	A	78,–	0,–	78,–
MGU 460, hot-dip galvanized	A	967,–	266,–	1233,–
Lid, galvanized	A	169,–	22,–	191,–
Castor Set, polyamide, Load capacity 1050 kg / castor set	A	156,–	15,–	171,–
Skip Body Welded Oil and Watertight	A	78,–	0,–	78,–
MGU 610, painted	A	919,–	266,–	1185,–
Lid, galvanized	A	181,–	26,–	207,–
Castor Set, polyamide, Load capacity 1050 kg / castor set	A	156,–	15,–	171,–
Skip Body Welded Oil and Watertight	A	78,–	0,–	78,–
MGU 610, hot-dip galvanized	A	1089,–	266,–	1355,–
Lid, galvanized	A	181,–	26,–	207,–
Castor Set, polyamide, Load capacity 1050 kg / castor set	A	156,–	15,–	171,–
Skip Body Welded Oil and Watertight	A	78,–	0,–	78,–

Prices in EUR, valid EXW DE-46354 Südlohn, DE-38820 Halberstadt, unpacked
Freight charges valid CPT Norway, islands and oversea territories excluded

BAUER GmbH
Eichendorffstr. 62
46354 Südlohn, Germany

Tel. +49 2862 70 90
info@bauer-suedlohn.com
www.bauer-suedlohn.com

Geschäftsführer
Patrick Bauer, Pascal Bauer
Amtsgericht Coesfeld HRB 5259

TÜVNORD
TÜV NORD CERT GmbH
DIN EN ISO 9001
tuev-nord.de

Price List 0726 en-NO
Forklift Truck Attachments

Wheelie Bin Jack Type MH	Category	Price	Freight charges	Price including freight charges
MH-I, painted	A	657,–	182,–	839,–
MH-II, painted	A	725,–	182,–	907,–
MH-III, painted	A	784,–	182,–	966,–

Wheelie Bin Tipper Type MK	Category	Price	Freight charges	Price including freight charges
MK 120, painted	A	1273,–	182,–	1455,–
MK 240, painted	A	1273,–	182,–	1455,–

Wheelie Bin Tipper Type MK-H	Category	Price	Freight charges	Price including freight charges
MK-H 120, painted	A	1902,–	182,–	2084,–
MK-H 240, painted	A	1902,–	266,–	2168,–

Mini Container With Drop Away Base Type MSB	Category	Price	Freight charges	Price including freight charges
MSB 150, painted	A	636,–	182,–	818,–
Castor Set, polyamide, Load capacity 1050 kg / castor set	A	156,–	15,–	171,–
Guiding Plates, galvanized	A	73,–	12,–	85,–
MSB 150, hot-dip galvanized	A	746,–	182,–	928,–
Castor Set, polyamide, Load capacity 1050 kg / castor set	A	156,–	15,–	171,–
Guiding Plates, galvanized	A	73,–	12,–	85,–
MSB 250, painted	A	690,–	182,–	872,–
Castor Set, polyamide, Load capacity 1050 kg / castor set	A	156,–	15,–	171,–
Guiding Plates, galvanized	A	73,–	12,–	85,–
MSB 250, hot-dip galvanized	A	826,–	182,–	1008,–
Castor Set, polyamide, Load capacity 1050 kg / castor set	A	156,–	15,–	171,–
Guiding Plates, galvanized	A	73,–	12,–	85,–
MSB 400, painted	A	850,–	182,–	1032,–
Castor Set, polyamide, Load capacity 1050 kg / castor set	A	156,–	15,–	171,–
Guiding Plates, galvanized	A	73,–	12,–	85,–
MSB 400, hot-dip galvanized	A	1018,–	266,–	1284,–
Castor Set, polyamide, Load capacity 1050 kg / castor set	A	156,–	15,–	171,–
Guiding Plates, galvanized	A	73,–	12,–	85,–

Tilting Container Type NK	Category	Price	Freight charges	Price including freight charges
NK 30, painted	A	700,–	266,–	966,–
Lid, galvanized	A	98,–	15,–	113,–
Castor Set, polyamide, Load capacity 1350 kg / castor set	A	192,–	15,–	207,–
Skip Body Welded Oil and Watertight	A	78,–	0,–	78,–
NK 30, hot-dip galvanized	A	984,–	266,–	1250,–
Lid, galvanized	A	98,–	15,–	113,–
Castor Set, polyamide, Load capacity 1350 kg / castor set	A	192,–	15,–	207,–
Skip Body Welded Oil and Watertight	A	78,–	0,–	78,–
NK 50, painted	A	984,–	266,–	1250,–
Lid, galvanized	A	98,–	18,–	116,–
Castor Set, polyamide, Load capacity 1350 kg / castor set	A	192,–	15,–	207,–
Skip Body Welded Oil and Watertight	A	78,–	0,–	78,–

Prices in EUR, valid EXW DE-46354 Südlohn, DE-38820 Halberstadt, unpacked
Freight charges valid CPT Norway, islands and oversea territories excluded

BAUER GmbH
Eichendorffstr. 62
46354 Südlohn, Germany

Tel. +49 2862 70 90
info@bauer-suedlohn.com
www.bauer-suedlohn.com

Geschäftsführer
Patrick Bauer, Pascal Bauer
Amtsgericht Coesfeld HRB 5259

TÜVNORD
TÜV NORD CERT GmbH
DIN EN ISO 9001
tuev-nord.de

Price List 0726 en-NO
Forklift Truck Attachments

Tilting Container Type NK	Category	Price	Freight charges	Price including freight charges
NK 50, hot-dip galvanized	A	1327,–	266,–	1593,–
Lid, galvanized	A	98,–	18,–	116,–
Castor Set, polyamide, Load capacity 1350 kg / castor set	A	192,–	15,–	207,–
Skip Body Welded Oil and Watertight	A	78,–	0,–	78,–
NK 75, painted	A	1115,–	400,–	1515,–
Lid, galvanized	A	142,–	22,–	164,–
Castor Set, polyamide, Load capacity 1350 kg / castor set	A	192,–	15,–	207,–
Skip Body Welded Oil and Watertight	A	78,–	0,–	78,–
NK 75, hot-dip galvanized	A	1743,–	400,–	2143,–
Lid, galvanized	A	142,–	22,–	164,–
Castor Set, polyamide, Load capacity 1350 kg / castor set	A	192,–	15,–	207,–
Skip Body Welded Oil and Watertight	A	78,–	0,–	78,–
NK 100, painted	A	1508,–	400,–	1908,–
Lid, galvanized	A	173,–	27,–	200,–
Castor Set, polyamide, Load capacity 1350 kg / castor set	A	192,–	15,–	207,–
Skip Body Welded Oil and Watertight	A	121,–	0,–	121,–
NK 100, hot-dip galvanized	A	2070,–	400,–	2470,–
Lid, galvanized	A	173,–	27,–	200,–
Castor Set, polyamide, Load capacity 1350 kg / castor set	A	192,–	15,–	207,–
Skip Body Welded Oil and Watertight	A	121,–	0,–	121,–

Cylindrical Container Type RB	Category	Price	Freight charges	Price including freight charges
RB 300, painted	A	679,–	182,–	861,–
Lid, aluminium	A	160,–	14,–	174,–
Castor Set, polyamide, Load capacity 1050 kg / castor set	A	156,–	15,–	171,–
RB 450, painted	A	793,–	182,–	975,–
Lid, aluminium	A	160,–	14,–	174,–
Castor Set, polyamide, Load capacity 1050 kg / castor set	A	156,–	15,–	171,–

Tilting Container Type RD	Category	Price	Freight charges	Price including freight charges
RD 750, painted	A	1202,–	400,–	1602,–
Castor Set, polyamide, Load capacity 1350 kg / castor set	A	192,–	15,–	207,–
Skip Body Welded Oil and Watertight	A	78,–	0,–	78,–
RD 750, hot-dip galvanized	A	1602,–	400,–	2002,–
Castor Set, polyamide, Load capacity 1350 kg / castor set	A	192,–	15,–	207,–
Skip Body Welded Oil and Watertight	A	78,–	0,–	78,–
RD 1000, painted	A	1449,–	400,–	1849,–
Castor Set, polyamide, Load capacity 1350 kg / castor set	A	192,–	15,–	207,–
Skip Body Welded Oil and Watertight	A	121,–	0,–	121,–
RD 1000, hot-dip galvanized	A	1933,–	400,–	2333,–
Castor Set, polyamide, Load capacity 1350 kg / castor set	A	192,–	15,–	207,–
Skip Body Welded Oil and Watertight	A	121,–	0,–	121,–

Platform for Off-Cuts Type RGP	Category	Price	Freight charges	Price including freight charges
RGP-1, painted	A	2437,–	on request	on request

Prices in EUR, valid EXW DE-46354 Südlohn, DE-38820 Halberstadt, unpacked
Freight charges valid CPT Norway, islands and oversea territories excluded

BAUER GmbH
Eichendorffstr. 62
46354 Südlohn, Germany

Tel. +49 2862 70 90
info@bauer-suedlohn.com
www.bauer-suedlohn.com

Geschäftsführer
Patrick Bauer, Pascal Bauer
Amtsgericht Coesfeld HRB 5259

TÜVNORD
TÜV NORD CERT GmbH
DIN EN ISO 9001
tuev-nord.de

Price List 0726 en-NO
Forklift Truck Attachments

Platform for Off-Cuts Type RGP	Category	Price	Freight charges	Price including freight charges
RGP-1, hot-dip galvanized	A	3118,–	on request	on request
RGP-2, painted	A	2669,–	on request	on request
RGP-2, hot-dip galvanized	A	3558,–	on request	on request
RGP-3, painted	A	2907,–	on request	on request
RGP-3, hot-dip galvanized	A	3916,–	on request	on request

Shunting Aid Type RH	Category	Price	Freight charges	Price including freight charges
RH, painted	A	426,–	70,–	496,–

Shunting Aid Type RH-AC	Category	Price	Freight charges	Price including freight charges
RH-AC, painted	A	2305,–	400,–	2705,–

Shunting Aid Type RH-RA	Category	Price	Freight charges	Price including freight charges
RH-RA, painted	A	1586,–	182,–	1768,–

Shunting Aid Type RH-RAK	Category	Price	Freight charges	Price including freight charges
RH-RAK, painted	A	1691,–	182,–	1873,–

Shunting Aid Type RH-RM	Category	Price	Freight charges	Price including freight charges
RH-RM, painted	A	1178,–	182,–	1360,–

Shunting Aid Type RH-RMK	Category	Price	Freight charges	Price including freight charges
RH-RMK, painted	A	1285,–	182,–	1467,–

Drum Lifter Type RS 60	Category	Price	Freight charges	Price including freight charges
RS 60-I, painted	B	1013,–	182,–	1195,–
RS 60-I, hot-dip galvanized	B	1076,–	182,–	1258,–
RS 60-II, painted	B	1713,–	182,–	1895,–
RS 60-II, hot-dip galvanized	B	1798,–	182,–	1980,–

Drum Lifter Type RS	Category	Price	Freight charges	Price including freight charges
RS-I/91, painted	B	1701,–	266,–	1967,–
RS-I/91, hot-dip galvanized	B	1945,–	266,–	2211,–
RS-II/91, painted	B	2948,–	266,–	3214,–
RS-II/91, hot-dip galvanized	B	3320,–	266,–	3586,–
RS-I/M, painted	B	1556,–	182,–	1738,–
RS-I/M, hot-dip galvanized	B	1798,–	266,–	2064,–
RS-II/M, painted	B	2663,–	266,–	2929,–
RS-II/M, hot-dip galvanized	B	3030,–	266,–	3296,–

Drum Lifter Type RS/D 91	Category	Price	Freight charges	Price including freight charges
RS-I/D 91, painted	B	1488,–	266,–	1754,–
RS-I/D 91, hot-dip galvanized	B	1730,–	266,–	1996,–
RS-II/D 91, painted	B	2521,–	266,–	2787,–

Prices in EUR, valid EXW DE-46354 Südlohn, DE-38820 Halberstadt, unpacked
Freight charges valid CPT Norway, islands and oversea territories excluded

BAUER GmbH
Eichendorffstr. 62
46354 Südlohn, Germany

Tel. +49 2862 70 90
info@bauer-suedlohn.com
www.bauer-suedlohn.com

Geschäftsführer
Patrick Bauer, Pascal Bauer
Amtsgericht Coesfeld HRB 5259

TÜVNORD
TÜV NORD CERT GmbH
DIN EN ISO 9001
tuev-nord.de

Price List 0726 en-NO
Forklift Truck Attachments

Drum Lifter Type RS/D 91	Category	Price	Freight charges	Price including freight charges
RS-II/D 91, hot-dip galvanized	B	2887,–	266,–	3153,–

Swarf Tilting Container Type S3S	Category	Price	Freight charges	Price including freight charges
S3S 300, painted	A	1357,–	266,–	1623,–
Lid, galvanized	A	174,–	18,–	192,–
Castor Set, polyamide, Load capacity 1050 kg / castor set	A	136,–	15,–	151,–
S3S 300, hot-dip galvanized	A	1454,–	400,–	1854,–
Lid, galvanized	A	174,–	18,–	192,–
Castor Set, polyamide, Load capacity 1050 kg / castor set	A	136,–	15,–	151,–
S3S 600, painted	A	1413,–	400,–	1813,–
Lid, galvanized	A	196,–	22,–	218,–
Castor Set, polyamide, Load capacity 1050 kg / castor set	A	136,–	15,–	151,–
S3S 600, hot-dip galvanized	A	1514,–	400,–	1914,–
Lid, galvanized	A	196,–	22,–	218,–
Castor Set, polyamide, Load capacity 1050 kg / castor set	A	136,–	15,–	151,–

Swarf Tilting Container Type S4A	Category	Price	Freight charges	Price including freight charges
S4A 600, painted	A	1271,–	266,–	1537,–
Lid, galvanized	A	196,–	22,–	218,–
S4A 600, hot-dip galvanized	A	1418,–	266,–	1684,–
Lid, galvanized	A	196,–	22,–	218,–
S4A 900, painted	A	1408,–	400,–	1808,–
Lid, galvanized	A	223,–	27,–	250,–
S4A 900, hot-dip galvanized	A	1595,–	400,–	1995,–
Lid, galvanized	A	223,–	27,–	250,–
S4A 1200, painted	A	1497,–	400,–	1897,–
Lid, galvanized	A	223,–	26,–	249,–
S4A 1200, hot-dip galvanized	A	1730,–	400,–	2130,–
Lid, galvanized	A	223,–	26,–	249,–

Container With Drop Away Base Type SB	Category	Price	Freight charges	Price including freight charges
SB 500, painted	B	1000,–	266,–	1266,–
Lid, galvanized	B	143,–	16,–	159,–
Castor Set, polyamide, Load capacity 1350 kg / castor set	A	192,–	15,–	207,–
Heavy-duty Castor Set, polyamide, Load capacity 2550 kg / castor set	A	379,–	15,–	394,–
SB 500, hot-dip galvanized	B	1303,–	266,–	1569,–
Lid, galvanized	B	143,–	16,–	159,–
Castor Set, polyamide, Load capacity 1350 kg / castor set	A	192,–	15,–	207,–
Heavy-duty Castor Set, polyamide, Load capacity 2550 kg / castor set	A	379,–	15,–	394,–
SB 750, painted	B	1094,–	266,–	1360,–
Lid, galvanized	B	143,–	16,–	159,–
Castor Set, polyamide, Load capacity 1350 kg / castor set	A	192,–	15,–	207,–
Heavy-duty Castor Set, polyamide, Load capacity 2550 kg / castor set	A	379,–	15,–	394,–
SB 750, hot-dip galvanized	B	1520,–	400,–	1920,–
Lid, galvanized	B	143,–	16,–	159,–

Prices in EUR, valid EXW DE-46354 Südlohn, DE-38820 Halberstadt, unpacked
Freight charges valid CPT Norway, islands and oversea territories excluded

BAUER GmbH
Eichendorffstr. 62
46354 Südlohn, Germany

Tel. +49 2862 70 90
info@bauer-suedlohn.com
www.bauer-suedlohn.com

Geschäftsführer
Patrick Bauer, Pascal Bauer
Amtsgericht Coesfeld HRB 5259

TÜVNORD
TÜV NORD CERT GmbH
DIN EN ISO 9001
tuev-nord.de

Price List 0726 en-NO
Forklift Truck Attachments

Container With Drop Away Base Type SB	Category	Price	Freight charges	Price including freight charges
Castor Set, polyamide, Load capacity 1350 kg / castor set	A	192,–	15,–	207,–
Heavy-duty Castor Set, polyamide, Load capacity 2550 kg / castor set	A	379,–	15,–	394,–
SB 1000, painted	B	1295,–	400,–	1695,–
Lid, galvanized	B	143,–	16,–	159,–
Castor Set, polyamide, Load capacity 1350 kg / castor set	A	192,–	15,–	207,–
Heavy-duty Castor Set, polyamide, Load capacity 2550 kg / castor set	A	379,–	15,–	394,–
SB 1000, hot-dip galvanized	B	1801,–	400,–	2201,–
Lid, galvanized	B	143,–	16,–	159,–
Castor Set, polyamide, Load capacity 1350 kg / castor set	A	192,–	15,–	207,–
Heavy-duty Castor Set, polyamide, Load capacity 2550 kg / castor set	A	379,–	15,–	394,–
SB 1500, painted	B	1755,–	400,–	2155,–
Lid, galvanized	B	254,–	21,–	275,–
Castor Set, polyamide, Load capacity 1350 kg / castor set	A	192,–	15,–	207,–
Heavy-duty Castor Set, polyamide, Load capacity 2550 kg / castor set	A	379,–	15,–	394,–
SB 1500, hot-dip galvanized	B	2443,–	504,–	2947,–
Lid, galvanized	B	254,–	21,–	275,–
Castor Set, polyamide, Load capacity 1350 kg / castor set	A	192,–	15,–	207,–
Heavy-duty Castor Set, polyamide, Load capacity 2550 kg / castor set	A	379,–	15,–	394,–
SB 2000, painted	B	1803,–	504,–	2307,–
Lid, galvanized	B	254,–	21,–	275,–
Castor Set, polyamide, Load capacity 1350 kg / castor set	A	192,–	15,–	207,–
Heavy-duty Castor Set, polyamide, Load capacity 2550 kg / castor set	A	379,–	15,–	394,–
SB 2000, hot-dip galvanized	B	2581,–	504,–	3085,–
Lid, galvanized	B	254,–	21,–	275,–
Castor Set, polyamide, Load capacity 1350 kg / castor set	A	192,–	15,–	207,–
Heavy-duty Castor Set, polyamide, Load capacity 2550 kg / castor set	A	379,–	15,–	394,–

Collecting System Type SBS	Category	Price	Freight charges	Price including freight charges
SBS 500, painted	C	399,–	266,–	665,–
Trolley TW 500, hot-dip galvanized	C	258,–	182,–	440,–
SBS 500, hot-dip galvanized	C	472,–	266,–	738,–
Trolley TW 500, hot-dip galvanized	C	258,–	182,–	440,–
SBS 1000, painted	C	509,–	266,–	775,–
Trolley TW 1000, hot-dip galvanized	C	297,–	182,–	479,–
SBS 1000, hot-dip galvanized	C	626,–	266,–	892,–
Trolley TW 1000, hot-dip galvanized	C	297,–	182,–	479,–
SBS 2000, painted	C	807,–	453,–	1260,–
Trolley TW 2000, hot-dip galvanized	C	505,–	182,–	687,–
SBS 2000, hot-dip galvanized	C	968,–	453,–	1421,–
Trolley TW 2000, hot-dip galvanized	C	505,–	182,–	687,–

Filling Hopper Type SBT	Category	Price	Freight charges	Price including freight charges
SBT, painted	A	1671,–	400,–	2071,–

Prices in EUR, valid EXW DE-46354 Südlohn, DE-38820 Halberstadt, unpacked
Freight charges valid CPT Norway, islands and oversea territories excluded

BAUER GmbH
Eichendorffstr. 62
46354 Südlohn, Germany

Tel. +49 2862 70 90
info@bauer-suedlohn.com
www.bauer-suedlohn.com

Geschäftsführer
Patrick Bauer, Pascal Bauer
Amtsgericht Coesfeld HRB 5259

TÜVNORD
TÜV NORD CERT GmbH
DIN EN ISO 9001
tuev-nord.de

Price List 0726 en-NO
Forklift Truck Attachments

Snowdozer Type SCH-F	Category	Price	Freight charges	Price including freight charges
SCH-F 150, painted	A	2233,–	400,–	2633,–
SCH-F 180, painted	A	2507,–	400,–	2907,–
SCH-F 210, painted	A	2818,–	400,–	3218,–
SCH-F 240, painted	A	3095,–	557,–	3652,–

Snowdozer Type SCH-G	Category	Price	Freight charges	Price including freight charges
SCH-G 150, painted	A	1584,–	266,–	1850,–
SCH-G 180, painted	A	1730,–	266,–	1996,–
SCH-G 210, painted	A	1998,–	400,–	2398,–
SCH-G 240, painted	A	2160,–	453,–	2613,–

Snowdozer Type SCH-L	Category	Price	Freight charges	Price including freight charges
SCH-L 1500, painted	A	1182,–	266,–	1448,–
SCH-L 1500, hot-dip galvanized	A	1310,–	266,–	1576,–
SCH-L 1800, painted	A	1380,–	266,–	1646,–
SCH-L 1800, hot-dip galvanized	A	1532,–	266,–	1798,–

Snow Plough Type SCH-P-G	Category	Price	Freight charges	Price including freight charges
SCH-P-G 150, painted	A	2493,–	400,–	2893,–
SCH-P-G 180, painted	A	2677,–	400,–	3077,–
SCH-P-G 210, painted	A	2870,–	400,–	3270,–
SCH-P-G 240, painted	A	3408,–	453,–	3861,–

Snow Plough Type SCH-P-S	Category	Price	Freight charges	Price including freight charges
SCH-P-S 150, painted	A	2318,–	400,–	2718,–
SCH-P-S 180, painted	A	2476,–	400,–	2876,–
SCH-P-S 210, painted	A	2629,–	400,–	3029,–
SCH-P-S 240, painted	A	3128,–	453,–	3581,–

Snow Plough Type SCH-P-V	Category	Price	Freight charges	Price including freight charges
SCH-P-V 150, painted	A	2681,–	400,–	3081,–
SCH-P-V 180, painted	A	2949,–	400,–	3349,–
SCH-P-V 210, painted	A	3200,–	400,–	3600,–
SCH-P-V 240, painted	A	3741,–	453,–	4194,–

Snowdozer Type SCH-S	Category	Price	Freight charges	Price including freight charges
SCH-S 150, painted	A	1407,–	266,–	1673,–
SCH-S 180, painted	A	1528,–	266,–	1794,–
SCH-S 210, painted	A	1760,–	400,–	2160,–
SCH-S 240, painted	A	1880,–	453,–	2333,–

Snow Plough Type SCH-U-G	Category	Price	Freight charges	Price including freight charges
SCH-U-G 150, painted	A	2493,–	400,–	2893,–
SCH-U-G 180, painted	A	2677,–	400,–	3077,–

Prices in EUR, valid EXW DE-46354 Südlohn, DE-38820 Halberstadt, unpacked
Freight charges valid CPT Norway, islands and oversea territories excluded

BAUER GmbH
Eichendorffstr. 62
46354 Südlohn, Germany

Tel. +49 2862 70 90
info@bauer-suedlohn.com
www.bauer-suedlohn.com

Geschäftsführer
Patrick Bauer, Pascal Bauer
Amtsgericht Coesfeld HRB 5259

TÜVNORD
TÜV NORD CERT GmbH
DIN EN ISO 9001
tuev-nord.de

Price List 0726 en-NO
Forklift Truck Attachments

Snow Plough Type SCH-U-G	Category	Price	Freight charges	Price including freight charges
SCH-U-G 210, painted	A	2870,–	400,–	3270,–
SCH-U-G 240, painted	A	3408,–	453,–	3861,–

Snow Plough Type SCH-U-S	Category	Price	Freight charges	Price including freight charges
SCH-U-S 150, painted	A	2318,–	400,–	2718,–
SCH-U-S 180, painted	A	2476,–	400,–	2876,–
SCH-U-S 210, painted	A	2629,–	400,–	3029,–
SCH-U-S 240, painted	A	3128,–	453,–	3581,–

Snow Plough Type SCH-U-V	Category	Price	Freight charges	Price including freight charges
SCH-U-V 150, painted	A	2681,–	400,–	3081,–
SCH-U-V 180, painted	A	2949,–	400,–	3349,–
SCH-U-V 210, painted	A	3200,–	400,–	3600,–
SCH-U-V 240, painted	A	3741,–	453,–	4194,–

Snowdozer Type SCH-V	Category	Price	Freight charges	Price including freight charges
SCH-V 150, painted	A	1769,–	266,–	2035,–
SCH-V 180, painted	A	1991,–	266,–	2257,–
SCH-V 210, painted	A	2331,–	400,–	2731,–
SCH-V 240, painted	A	2492,–	453,–	2945,–

Silo Container Type SG	Category	Price	Freight charges	Price including freight charges
SG 375, painted	E	1014,–	266,–	1280,–
Lid, galvanized	E	131,–	28,–	159,–
SG 375, hot-dip galvanized	E	1760,–	266,–	2026,–
Lid, galvanized	E	131,–	28,–	159,–
SG 600, painted	E	1209,–	266,–	1475,–
Lid, galvanized	E	131,–	28,–	159,–
SG 600, hot-dip galvanized	E	1951,–	266,–	2217,–
Lid, galvanized	E	131,–	28,–	159,–

Silo Container Type SG-D	Category	Price	Freight charges	Price including freight charges
SG-D 375, painted	E	1014,–	182,–	1196,–
Lid, galvanized	E	131,–	28,–	159,–
SG-D 375, hot-dip galvanized	E	1760,–	266,–	2026,–
Lid, galvanized	E	131,–	28,–	159,–
SG-D 600, painted	E	1209,–	266,–	1475,–
Lid, galvanized	E	131,–	28,–	159,–
SG-D 600, hot-dip galvanized	E	1951,–	266,–	2217,–
Lid, galvanized	E	131,–	28,–	159,–

Silo Container Type SGK	Category	Price	Freight charges	Price including freight charges
SGK 50, painted	A	1115,–	266,–	1381,–
SGK 50, hot-dip galvanized	A	1142,–	266,–	1408,–
SGK 75, painted	A	1214,–	266,–	1480,–

Prices in EUR, valid EXW DE-46354 Südlohn, DE-38820 Halberstadt, unpacked
Freight charges valid CPT Norway, islands and oversea territories excluded

BAUER GmbH
Eichendorffstr. 62
46354 Südlohn, Germany

Tel. +49 2862 70 90
info@bauer-suedlohn.com
www.bauer-suedlohn.com

Geschäftsführer
Patrick Bauer, Pascal Bauer
Amtsgericht Coesfeld HRB 5259

TÜVNORD
TÜV NORD CERT GmbH
DIN EN ISO 9001
tuev-nord.de

Price List 0726 en-NO
Forklift Truck Attachments

Silo Container Type SGK	Category	Price	Freight charges	Price including freight charges
SGK 75, hot-dip galvanized	A	1251,–	266,–	1517,–
SGK 100, painted	A	1327,–	266,–	1593,–
SGK 100, hot-dip galvanized	A	1367,–	266,–	1633,–

Silo Container Type SGS	Category	Price	Freight charges	Price including freight charges
SGS 50, painted	A	885,–	182,–	1067,–
SGS 50, hot-dip galvanized	A	902,–	266,–	1168,–
SGS 75, painted	A	982,–	266,–	1248,–
SGS 75, hot-dip galvanized	A	1015,–	266,–	1281,–
SGS 100, painted	A	1078,–	266,–	1344,–
SGS 100, hot-dip galvanized	A	1110,–	266,–	1376,–

Swarf Tilting Container Type SGU	Category	Price	Freight charges	Price including freight charges
SGU 30, painted	A	940,–	266,–	1206,–
Lid, galvanized	A	98,–	18,–	116,–
Castor Set, polyamide, Load capacity 1350 kg / castor set	A	192,–	15,–	207,–
Crane lifting eyes for use with a crane	A	106,–	8,–	114,–
Support legs, 100 mm ground leeway	A	70,–	8,–	78,–
SGU 30, hot-dip galvanized	A	1117,–	266,–	1383,–
Lid, galvanized	A	98,–	18,–	116,–
Castor Set, polyamide, Load capacity 1350 kg / castor set	A	192,–	15,–	207,–
Crane lifting eyes for use with a crane	A	106,–	8,–	114,–
Support legs, 100 mm ground leeway	A	70,–	8,–	78,–
SGU 50, painted	A	1163,–	266,–	1429,–
Lid, galvanized	A	98,–	18,–	116,–
Castor Set, polyamide, Load capacity 1350 kg / castor set	A	192,–	15,–	207,–
Adjustable dumping brake	A	464,–	10,–	474,–
Crane lifting eyes for use with a crane	A	106,–	8,–	114,–
Support legs, 100 mm ground leeway	A	70,–	8,–	78,–
SGU 50, hot-dip galvanized	A	1407,–	266,–	1673,–
Lid, galvanized	A	98,–	18,–	116,–
Castor Set, polyamide, Load capacity 1350 kg / castor set	A	192,–	15,–	207,–
Adjustable dumping brake	A	464,–	10,–	474,–
Crane lifting eyes for use with a crane	A	106,–	8,–	114,–
Support legs, 100 mm ground leeway	A	70,–	8,–	78,–
SGU 75, painted	A	1312,–	266,–	1578,–
Lid, galvanized	A	139,–	26,–	165,–
Castor Set, polyamide, Load capacity 1350 kg / castor set	A	192,–	15,–	207,–
Adjustable dumping brake	A	464,–	10,–	474,–
Crane lifting eyes for use with a crane	A	106,–	8,–	114,–
Support legs, 100 mm ground leeway	A	70,–	8,–	78,–
SGU 75, hot-dip galvanized	A	1623,–	266,–	1889,–
Lid, galvanized	A	139,–	26,–	165,–
Castor Set, polyamide, Load capacity 1350 kg / castor set	A	192,–	15,–	207,–
Adjustable dumping brake	A	464,–	10,–	474,–

Prices in EUR, valid EXW DE-46354 Südlohn, DE-38820 Halberstadt, unpacked
Freight charges valid CPT Norway, islands and oversea territories excluded

BAUER GmbH
Eichendorffstr. 62
46354 Südlohn, Germany

Tel. +49 2862 70 90
info@bauer-suedlohn.com
www.bauer-suedlohn.com

Geschäftsführer
Patrick Bauer, Pascal Bauer
Amtsgericht Coesfeld HRB 5259

TÜVNORD
TÜV NORD CERT GmbH
DIN EN ISO 9001
tuev-nord.de

Price List 0726 en-NO
Forklift Truck Attachments

Swarf Tilting Container Type SGU	Category	Price	Freight charges	Price including freight charges
Crane lifting eyes for use with a crane	A	106,–	8,–	114,–
Support legs, 100 mm ground leeway	A	70,–	8,–	78,–
SGU 100, painted	A	1571,–	400,–	1971,–
Lid, galvanized	A	192,–	27,–	219,–
Castor Set, polyamide, Load capacity 1350 kg / castor set	A	192,–	15,–	207,–
Adjustable dumping brake	A	464,–	10,–	474,–
Crane lifting eyes for use with a crane	A	106,–	8,–	114,–
Support legs, 100 mm ground leeway	A	70,–	8,–	78,–
SGU 100, hot-dip galvanized	A	2120,–	400,–	2520,–
Lid, galvanized	A	192,–	27,–	219,–
Castor Set, polyamide, Load capacity 1350 kg / castor set	A	192,–	15,–	207,–
Adjustable dumping brake	A	464,–	10,–	474,–
Crane lifting eyes for use with a crane	A	106,–	8,–	114,–
Support legs, 100 mm ground leeway	A	70,–	8,–	78,–
SGU 150, painted	A	1764,–	400,–	2164,–
Lid, galvanized	A	192,–	27,–	219,–
Castor Set, polyamide, Load capacity 1350 kg / castor set	A	192,–	15,–	207,–
Adjustable dumping brake	A	464,–	10,–	474,–
Crane lifting eyes for use with a crane	A	106,–	8,–	114,–
Support legs, 100 mm ground leeway	A	70,–	8,–	78,–
SGU 150, hot-dip galvanized	A	2242,–	400,–	2642,–
Lid, galvanized	A	192,–	27,–	219,–
Castor Set, polyamide, Load capacity 1350 kg / castor set	A	192,–	15,–	207,–
Adjustable dumping brake	A	464,–	10,–	474,–
Crane lifting eyes for use with a crane	A	106,–	8,–	114,–
Support legs, 100 mm ground leeway	A	70,–	8,–	78,–
SGU 200, painted	A	2215,–	504,–	2719,–
Lid, galvanized	A	226,–	32,–	258,–
Castor Set, polyamide, Load capacity 1350 kg / castor set	A	192,–	15,–	207,–
Adjustable dumping brake	A	464,–	10,–	474,–
Crane lifting eyes for use with a crane	A	106,–	8,–	114,–
Support legs, 100 mm ground leeway	A	70,–	8,–	78,–
SGU 200, hot-dip galvanized	A	2779,–	504,–	3283,–
Castor Set, polyamide, Load capacity 1350 kg / castor set	A	192,–	15,–	207,–
Lid, galvanized	A	226,–	32,–	258,–
Adjustable dumping brake	A	464,–	10,–	474,–
Crane lifting eyes for use with a crane	A	106,–	8,–	114,–
Support legs, 100 mm ground leeway	A	70,–	8,–	78,–

Swarf Tilting Container Type SGU-RZ	Category	Price	Freight charges	Price including freight charges
SGU-RZ 30, painted	A	972,–	266,–	1238,–
Lid, galvanized	A	95,–	18,–	113,–
SGU-RZ 30, hot-dip galvanized	A	1097,–	266,–	1363,–
Lid, galvanized	A	95,–	18,–	113,–
SGU-RZ 55, painted	A	1202,–	266,–	1468,–
Lid, galvanized	A	95,–	18,–	113,–

Prices in EUR, valid EXW DE-46354 Südlohn, DE-38820 Halberstadt, unpacked
Freight charges valid CPT Norway, islands and oversea territories excluded

BAUER GmbH
Eichendorffstr. 62
46354 Südlohn, Germany

Tel. +49 2862 70 90
info@bauer-suedlohn.com
www.bauer-suedlohn.com

Geschäftsführer
Patrick Bauer, Pascal Bauer
Amtsgericht Coesfeld HRB 5259

TÜVNORD
TÜV NORD CERT GmbH
DIN EN ISO 9001
tuev-nord.de

Price List 0726 en-NO
Forklift Truck Attachments

Swarf Tilting Container Type SGU-RZ	Category	Price	Freight charges	Price including freight charges
SGU-RZ 55, hot-dip galvanized	A	1314,–	266,–	1580,–
Lid, galvanized	A	95,–	18,–	113,–

Gritter Type SH	Category	Price	Freight charges	Price including freight charges
SH, painted	A	3569,–	266,–	3835,–
Tarpaulin	A	122,–	10,–	132,–

Forklift Safety Cage Type SIKO	Category	Price	Freight charges	Price including freight charges
SIKO, painted	A	726,–	266,–	992,–
Castor Set, polyamide, Load capacity 1050 kg / castor set	A	136,–	15,–	151,–

Forklift Safety Cage Type SIKO/L	Category	Price	Freight charges	Price including freight charges
SIKO/L, painted	A	878,–	266,–	1144,–
Castor Set, polyamide, Load capacity 1050 kg / castor set	A	136,–	15,–	151,–

Forklift Safety Cage Type SIKO-G	Category	Price	Freight charges	Price including freight charges
SIKO-G, painted	A	657,–	182,–	839,–

Forklift Safety Cage Type SIKO-M	Category	Price	Freight charges	Price including freight charges
SIKO-M, painted	A	529,–	182,–	711,–

Heavy Duty Tilting Container Type SK	Category	Price	Freight charges	Price including freight charges
SK 300, painted	A	1281,–	400,–	1681,–
Lid, galvanized	A	174,–	18,–	192,–
Heavy-duty Castor Set, polyamide, Load capacity 2550 kg / castor set	A	379,–	15,–	394,–
Skip Body Welded Oil and Watertight	A	78,–	0,–	78,–
SK 300, hot-dip galvanized	A	1555,–	400,–	1955,–
Lid, galvanized	A	174,–	18,–	192,–
Heavy-duty Castor Set, polyamide, Load capacity 2550 kg / castor set	A	379,–	15,–	394,–
Skip Body Welded Oil and Watertight	A	78,–	0,–	78,–
SK 600, painted	A	1386,–	400,–	1786,–
Lid, galvanized	A	196,–	22,–	218,–
Heavy-duty Castor Set, polyamide, Load capacity 2550 kg / castor set	A	379,–	15,–	394,–
Skip Body Welded Oil and Watertight	A	78,–	0,–	78,–
SK 600, hot-dip galvanized	A	1724,–	504,–	2228,–
Lid, galvanized	A	196,–	22,–	218,–
Heavy-duty Castor Set, polyamide, Load capacity 2550 kg / castor set	A	379,–	15,–	394,–
Skip Body Welded Oil and Watertight	A	78,–	0,–	78,–
SK 900, painted	A	1510,–	504,–	2014,–
Lid, galvanized	A	223,–	27,–	250,–
Heavy-duty Castor Set, polyamide, Load capacity 2550 kg / castor set	A	379,–	15,–	394,–
Skip Body Welded Oil and Watertight	A	78,–	0,–	78,–
SK 900, hot-dip galvanized	A	1941,–	504,–	2445,–
Lid, galvanized	A	223,–	27,–	250,–
Heavy-duty Castor Set, polyamide, Load capacity 2550 kg / castor set	A	379,–	15,–	394,–

Prices in EUR, valid EXW DE-46354 Südlohn, DE-38820 Halberstadt, unpacked
Freight charges valid CPT Norway, islands and oversea territories excluded

BAUER GmbH
Eichendorffstr. 62
46354 Südlohn, Germany

Tel. +49 2862 70 90
info@bauer-suedlohn.com
www.bauer-suedlohn.com

Geschäftsführer
Patrick Bauer, Pascal Bauer
Amtsgericht Coesfeld HRB 5259

TÜVNORD
TÜV NORD CERT GmbH
DIN EN ISO 9001
tuev-nord.de

Price List 0726 en-NO
Forklift Truck Attachments

Heavy Duty Tilting Container Type SK	Category	Price	Freight charges	Price including freight charges
Skip Body Welded Oil and Watertight	A	78,–	0,–	78,–
SK 1200, painted	A	1770,–	504,–	2274,–
Lid, galvanized	A	223,–	26,–	249,–
Heavy-duty Castor Set, polyamide, Load capacity 2550 kg / castor set	A	379,–	15,–	394,–
Skip Body Welded Oil and Watertight	A	121,–	0,–	121,–
SK 1200, hot-dip galvanized	A	2277,–	683,–	2960,–
Lid, galvanized	A	223,–	26,–	249,–
Heavy-duty Castor Set, polyamide, Load capacity 2550 kg / castor set	A	379,–	15,–	394,–
Skip Body Welded Oil and Watertight	A	121,–	0,–	121,–
SK 1700, painted	A	1862,–	683,–	2545,–
Lid, galvanized	A	276,–	33,–	309,–
Heavy-duty Castor Set, polyamide, Load capacity 2550 kg / castor set	A	379,–	15,–	394,–
Skip Body Welded Oil and Watertight	A	121,–	0,–	121,–
SK 1700, hot-dip galvanized	A	2492,–	683,–	3175,–
Lid, galvanized	A	276,–	33,–	309,–
Heavy-duty Castor Set, polyamide, Load capacity 2550 kg / castor set	A	379,–	15,–	394,–
Skip Body Welded Oil and Watertight	A	121,–	0,–	121,–
SK 2100, painted	A	2032,–	683,–	2715,–
Lid, galvanized	A	360,–	36,–	396,–
Heavy-duty Castor Set, polyamide, Load capacity 2550 kg / castor set	A	379,–	15,–	394,–
Skip Body Welded Oil and Watertight	A	121,–	0,–	121,–
SK 2100, hot-dip galvanized	A	2739,–	683,–	3422,–
Lid, galvanized	A	360,–	36,–	396,–
Heavy-duty Castor Set, polyamide, Load capacity 2550 kg / castor set	A	379,–	15,–	394,–
Skip Body Welded Oil and Watertight	A	121,–	0,–	121,–

Broom Type SKB	Category	Price	Freight charges	Price including freight charges
SKB 100, painted	A	958,–	182,–	1140,–
SKB 150, painted	A	1197,–	182,–	1379,–
SKB 200, painted	A	1475,–	182,–	1657,–

Broom Type SKB-O	Category	Price	Freight charges	Price including freight charges
SKB-O 100, painted	A	658,–	182,–	840,–
SKB-O 150, painted	A	898,–	182,–	1080,–
SKB-O 200, painted	A	1176,–	182,–	1358,–

Swarf Tipping Skip Type SKK	Category	Price	Freight charges	Price including freight charges
SKK 250, painted	E	534,–	182,–	716,–
Lid, galvanized	E	136,–	15,–	151,–
Castor Set, polyamide, Load capacity 1050 kg / castor set	A	136,–	15,–	151,–
Castor Set, solid rubber, Load capacity 615 kg / castor set	E	103,–	15,–	118,–
SKK 250, hot-dip galvanized	E	583,–	182,–	765,–
Lid, galvanized	E	136,–	15,–	151,–
Castor Set, polyamide, Load capacity 1050 kg / castor set	A	136,–	15,–	151,–
Castor Set, solid rubber, Load capacity 615 kg / castor set	E	103,–	15,–	118,–

Prices in EUR, valid EXW DE-46354 Südlohn, DE-38820 Halberstadt, unpacked
Freight charges valid CPT Norway, islands and oversea territories excluded

BAUER GmbH
Eichendorffstr. 62
46354 Südlohn, Germany

Tel. +49 2862 70 90
info@bauer-suedlohn.com
www.bauer-suedlohn.com

Geschäftsführer
Patrick Bauer, Pascal Bauer
Amtsgericht Coesfeld HRB 5259

TÜVNORD
TÜV NORD CERT GmbH
DIN EN ISO 9001
tuev-nord.de

Price List 0726 en-NO
Forklift Truck Attachments

Swarf Tipping Skip Type SKK	Category	Price	Freight charges	Price including freight charges
SKK 400, painted	E	600,–	182,–	782,–
Lid, galvanized	E	156,–	16,–	172,–
Castor Set, polyamide, Load capacity 1050 kg / castor set	A	136,–	15,–	151,–
Castor Set, solid rubber, Load capacity 615 kg / castor set	E	103,–	15,–	118,–
SKK 400, hot-dip galvanized	E	649,–	182,–	831,–
Lid, galvanized	E	156,–	16,–	172,–
Castor Set, polyamide, Load capacity 1050 kg / castor set	A	136,–	15,–	151,–
Castor Set, solid rubber, Load capacity 615 kg / castor set	E	103,–	15,–	118,–
SKK 600, painted	E	815,–	266,–	1081,–
Lid, galvanized	E	173,–	20,–	193,–
Castor Set, polyamide, Load capacity 1050 kg / castor set	A	136,–	15,–	151,–
Castor Set, solid rubber, Load capacity 615 kg / castor set	E	103,–	15,–	118,–
SKK 600, hot-dip galvanized	E	914,–	266,–	1180,–
Lid, galvanized	E	173,–	20,–	193,–
Castor Set, polyamide, Load capacity 1050 kg / castor set	A	136,–	15,–	151,–
Castor Set, solid rubber, Load capacity 615 kg / castor set	E	103,–	15,–	118,–
SKK 800, painted	E	872,–	266,–	1138,–
Lid, galvanized	E	181,–	21,–	202,–
Castor Set, polyamide, Load capacity 1050 kg / castor set	A	136,–	15,–	151,–
Castor Set, solid rubber, Load capacity 615 kg / castor set	E	103,–	15,–	118,–
SKK 800, hot-dip galvanized	E	980,–	266,–	1246,–
Lid, galvanized	E	181,–	21,–	202,–
Castor Set, polyamide, Load capacity 1050 kg / castor set	A	136,–	15,–	151,–
Castor Set, solid rubber, Load capacity 615 kg / castor set	E	103,–	15,–	118,–
SKK 1000, painted	E	930,–	266,–	1196,–
Lid, galvanized	E	193,–	22,–	215,–
Castor Set, polyamide, Load capacity 1050 kg / castor set	A	136,–	15,–	151,–
Castor Set, solid rubber, Load capacity 615 kg / castor set	E	103,–	15,–	118,–
SKK 1000, hot-dip galvanized	E	1063,–	266,–	1329,–
Lid, galvanized	E	193,–	22,–	215,–
Castor Set, polyamide, Load capacity 1050 kg / castor set	A	136,–	15,–	151,–
Castor Set, solid rubber, Load capacity 615 kg / castor set	E	103,–	15,–	118,–

Swarf Tilting Container Type SKM	Category	Price	Freight charges	Price including freight charges
SKM 30, painted	A	950,–	266,–	1216,–
Lid, galvanized	A	104,–	18,–	122,–
SKM 30, hot-dip galvanized	A	1148,–	266,–	1414,–
Lid, galvanized	A	104,–	18,–	122,–
SKM 50, painted	A	1220,–	266,–	1486,–
Lid, galvanized	A	158,–	28,–	186,–
SKM 50, hot-dip galvanized	A	1478,–	266,–	1744,–
Lid, galvanized	A	158,–	28,–	186,–
SKM 75, painted	A	1469,–	266,–	1735,–
Lid, galvanized	A	175,–	33,–	208,–
SKM 75, hot-dip galvanized	A	1790,–	400,–	2190,–
Lid, galvanized	A	175,–	33,–	208,–

Prices in EUR, valid EXW DE-46354 Südlohn, DE-38820 Halberstadt, unpacked
Freight charges valid CPT Norway, islands and oversea territories excluded

BAUER GmbH
Eichendorffstr. 62
46354 Südlohn, Germany

Tel. +49 2862 70 90
info@bauer-suedlohn.com
www.bauer-suedlohn.com

Geschäftsführer
Patrick Bauer, Pascal Bauer
Amtsgericht Coesfeld HRB 5259

TÜVNORD
TÜV NORD CERT GmbH
DIN EN ISO 9001
tuev-nord.de

Price List 0726 en-NO
Forklift Truck Attachments

Swarf Tipping Skip Type SKN	Category	Price	Freight charges	Price including freight charges
SKN 250, painted	E	534,–	182,–	716,–
Lid, galvanized	E	136,–	15,–	151,–
Castor Set, polyamide, Load capacity 1050 kg / castor set	A	136,–	15,–	151,–
Castor Set, solid rubber, Load capacity 615 kg / castor set	E	103,–	15,–	118,–
SKN 250, hot-dip galvanized	E	583,–	182,–	765,–
Lid, galvanized	E	136,–	15,–	151,–
Castor Set, polyamide, Load capacity 1050 kg / castor set	A	136,–	15,–	151,–
Castor Set, solid rubber, Load capacity 615 kg / castor set	E	103,–	15,–	118,–
SKN 400, painted	E	600,–	182,–	782,–
Lid, galvanized	E	156,–	16,–	172,–
Castor Set, polyamide, Load capacity 1050 kg / castor set	A	136,–	15,–	151,–
Castor Set, solid rubber, Load capacity 615 kg / castor set	E	103,–	15,–	118,–
SKN 400, hot-dip galvanized	E	649,–	182,–	831,–
Lid, galvanized	E	156,–	16,–	172,–
Castor Set, polyamide, Load capacity 1050 kg / castor set	A	136,–	15,–	151,–
Castor Set, solid rubber, Load capacity 615 kg / castor set	E	103,–	15,–	118,–

Swarf Tipping Skip Type SKS	Category	Price	Freight charges	Price including freight charges
SKS 400, painted	E	946,–	266,–	1212,–
SKS 550, painted	E	1013,–	266,–	1279,–
SKS 700, painted	E	1072,–	266,–	1338,–

Swarf Barrow Tipper Type SKW-ET	Category	Price	Freight charges	Price including freight charges
SKW-ET 250, painted	E	638,–	182,–	820,–
Lid, galvanized	E	136,–	15,–	151,–
SKW-ET 250, hot-dip galvanized	E	975,–	182,–	1157,–
Lid, galvanized	E	136,–	15,–	151,–
SKW-ET 400, painted	E	697,–	182,–	879,–
Lid, galvanized	E	156,–	16,–	172,–
SKW-ET 400, hot-dip galvanized	E	1071,–	182,–	1253,–
Lid, galvanized	E	156,–	16,–	172,–
SKW-ET 600, painted	E	851,–	266,–	1117,–
Lid, galvanized	E	173,–	20,–	193,–
SKW-ET 600, hot-dip galvanized	E	1233,–	266,–	1499,–
Lid, galvanized	E	173,–	20,–	193,–
SKW-ET 1000, painted	E	1032,–	266,–	1298,–
Lid, galvanized	E	193,–	22,–	215,–
SKW-ET 1000, hot-dip galvanized	E	1643,–	266,–	1909,–
Lid, galvanized	E	193,–	22,–	215,–

Mini Swarf Tilting Container Type SMGU	Category	Price	Freight charges	Price including freight charges
SMGU 230, painted	A	689,–	182,–	871,–
Lid, galvanized	A	131,–	18,–	149,–
Castor Set, polyamide, Load capacity 1050 kg / castor set	A	156,–	15,–	171,–
SMGU 230, hot-dip galvanized	A	775,–	266,–	1041,–

Prices in EUR, valid EXW DE-46354 Südlohn, DE-38820 Halberstadt, unpacked
Freight charges valid CPT Norway, islands and oversea territories excluded

BAUER GmbH
Eichendorffstr. 62
46354 Südlohn, Germany

Tel. +49 2862 70 90
info@bauer-suedlohn.com
www.bauer-suedlohn.com

Geschäftsführer
Patrick Bauer, Pascal Bauer
Amtsgericht Coesfeld HRB 5259

TÜVNORD
TÜV NORD CERT GmbH
DIN EN ISO 9001
tuev-nord.de

Price List 0726 en-NO
Forklift Truck Attachments

Mini Swarf Tilting Container Type SMGU	Category	Price	Freight charges	Price including freight charges
Lid, galvanized	A	131,–	18,–	149,–
Castor Set, polyamide, Load capacity 1050 kg / castor set	A	156,–	15,–	171,–
SMGU 270, painted	A	744,–	266,–	1010,–
Lid, galvanized	A	131,–	18,–	149,–
Castor Set, polyamide, Load capacity 1050 kg / castor set	A	156,–	15,–	171,–
SMGU 270, hot-dip galvanized	A	850,–	266,–	1116,–
Lid, galvanized	A	131,–	18,–	149,–
Castor Set, polyamide, Load capacity 1050 kg / castor set	A	156,–	15,–	171,–
SMGU 460, painted	A	935,–	266,–	1201,–
Lid, galvanized	A	169,–	22,–	191,–
Castor Set, polyamide, Load capacity 1050 kg / castor set	A	156,–	15,–	171,–
SMGU 460, hot-dip galvanized	A	1088,–	266,–	1354,–
Lid, galvanized	A	169,–	22,–	191,–
Castor Set, polyamide, Load capacity 1050 kg / castor set	A	156,–	15,–	171,–
SMGU 610, painted	A	1041,–	266,–	1307,–
Lid, galvanized	A	181,–	26,–	207,–
Castor Set, polyamide, Load capacity 1050 kg / castor set	A	156,–	15,–	171,–
SMGU 610, hot-dip galvanized	A	1209,–	266,–	1475,–
Lid, galvanized	A	181,–	26,–	207,–
Castor Set, polyamide, Load capacity 1050 kg / castor set	A	156,–	15,–	171,–

Silo Container Type SR	Category	Price	Freight charges	Price including freight charges
SR 375, painted	E	844,–	182,–	1026,–
Lid, galvanized	E	131,–	33,–	164,–
SR 375, hot-dip galvanized	E	1584,–	182,–	1766,–
Lid, galvanized	E	131,–	33,–	164,–
SR 600, painted	E	1048,–	266,–	1314,–
Lid, galvanized	E	131,–	33,–	164,–
SR 600, hot-dip galvanized	E	1801,–	266,–	2067,–
Lid, galvanized	E	131,–	33,–	164,–

Silo Container Type SR-D	Category	Price	Freight charges	Price including freight charges
SR-D 375, painted	E	844,–	182,–	1026,–
Lid, galvanized	E	131,–	33,–	164,–
SR-D 375, hot-dip galvanized	E	1584,–	182,–	1766,–
Lid, galvanized	E	131,–	33,–	164,–
SR-D 600, painted	E	1048,–	266,–	1314,–
Lid, galvanized	E	131,–	33,–	164,–
SR-D 600, hot-dip galvanized	E	1801,–	266,–	2067,–
Lid, galvanized	E	131,–	33,–	164,–

Silo Container Type SRE	Category	Price	Freight charges	Price including freight charges
SRE 375, painted	E	962,–	266,–	1228,–
Lid, galvanized	E	131,–	33,–	164,–
SRE 375, hot-dip galvanized	E	1723,–	266,–	1989,–

Prices in EUR, valid EXW DE-46354 Südlohn, DE-38820 Halberstadt, unpacked
Freight charges valid CPT Norway, islands and oversea territories excluded

BAUER GmbH
Eichendorffstr. 62
46354 Südlohn, Germany

Tel. +49 2862 70 90
info@bauer-suedlohn.com
www.bauer-suedlohn.com

Geschäftsführer
Patrick Bauer, Pascal Bauer
Amtsgericht Coesfeld HRB 5259

TÜVNORD
TÜV NORD CERT GmbH
DIN EN ISO 9001
tuev-nord.de

Price List 0726 en-NO
Forklift Truck Attachments

Silo Container Type SRE	Category	Price	Freight charges	Price including freight charges
Lid, galvanized	E	131,–	33,–	164,–
SRE 600, painted	E	1171,–	266,–	1437,–
Lid, galvanized	E	131,–	33,–	164,–
SRE 600, hot-dip galvanized	E	1857,–	266,–	2123,–
Lid, galvanized	E	131,–	33,–	164,–

Silo Container Type SRE-D	Category	Price	Freight charges	Price including freight charges
SRE-D 375, painted	E	962,–	182,–	1144,–
Lid, galvanized	E	131,–	33,–	164,–
SRE-D 375, hot-dip galvanized	E	1723,–	266,–	1989,–
Lid, galvanized	E	131,–	33,–	164,–
SRE-D 600, painted	E	1171,–	266,–	1437,–
Lid, galvanized	E	131,–	33,–	164,–
SRE-D 600, hot-dip galvanized	E	1857,–	266,–	2123,–
Lid, galvanized	E	131,–	33,–	164,–

Forklift Tender System Type STS	Category	Price	Freight charges	Price including freight charges
STS 2,5, painted	C	3857,–	on request	on request
STS 5,0, painted	C	4546,–	on request	on request

Spreader Type STW	Category	Price	Freight charges	Price including freight charges
STW 100, painted	A	1216,–	182,–	1398,–
Tarpaulin	A	116,–	10,–	126,–
STW 260, painted	A	2147,–	182,–	2329,–
Tarpaulin	A	122,–	10,–	132,–

Traverse for Big Bags Type TBB	Category	Price	Freight charges	Price including freight charges
TBB, painted	A	901,–	182,–	1083,–

Traverse For Big Bags Type TBB-E	Category	Price	Freight charges	Price including freight charges
TBB-E, painted	A	852,–	182,–	1034,–

Traverse For Big Bags Type TBB-W	Category	Price	Freight charges	Price including freight charges
TBB-W, painted	A	1093,–	182,–	1275,–

Mini Lifting Beam Type TM	Category	Price	Freight charges	Price including freight charges
TM 200-500, hot-dip galvanized	F	399,–	70,–	469,–
TM 400-800, hot-dip galvanized	F	429,–	70,–	499,–
TM 800-1200, hot-dip galvanized	F	566,–	70,–	636,–

Tilting Container Type TRIO	Category	Price	Freight charges	Price including freight charges
TRIO, painted	A	2333,–	504,–	2837,–
Lid, galvanized	A	215,–	26,–	241,–
Castor Set, polyamide, Load capacity 1350 kg / castor set	A	192,–	15,–	207,–

Prices in EUR, valid EXW DE-46354 Südlohn, DE-38820 Halberstadt, unpacked
Freight charges valid CPT Norway, islands and oversea territories excluded

BAUER GmbH
Eichendorffstr. 62
46354 Südlohn, Germany

Tel. +49 2862 70 90
info@bauer-suedlohn.com
www.bauer-suedlohn.com

Geschäftsführer
Patrick Bauer, Pascal Bauer
Amtsgericht Coesfeld HRB 5259

TÜVNORD
TÜV NORD CERT GmbH
DIN EN ISO 9001
tuev-nord.de

Price List 0726 en-NO
Forklift Truck Attachments

Tilting Container Type TRIO	Category	Price	Freight charges	Price including freight charges
Set of 5 self-adhesive stickers with symbols for: glass, paper, plastic, metal, residual waste	A	29,–	on request	on request

Universal Container Type UC	Category	Price	Freight charges	Price including freight charges
UC 500, painted	A	675,–	182,–	857,–
Lid, galvanized	A	168,–	16,–	184,–
Castor Set, polyamide, Load capacity 1350 kg / castor set	A	192,–	15,–	207,–
Pick-up Profile on Type UC for Traverse Type UCT	A	106,–	0,–	106,–
UC 500, hot-dip galvanized	A	771,–	266,–	1037,–
Lid, galvanized	A	168,–	16,–	184,–
Castor Set, polyamide, Load capacity 1350 kg / castor set	A	192,–	15,–	207,–
Pick-up Profile on Type UC for Traverse Type UCT	A	106,–	0,–	106,–
UC 750, painted	A	734,–	266,–	1000,–
Lid, galvanized	A	168,–	16,–	184,–
Castor Set, polyamide, Load capacity 1350 kg / castor set	A	192,–	15,–	207,–
Pick-up Profile on Type UC for Traverse Type UCT	A	106,–	0,–	106,–
UC 750, hot-dip galvanized	A	853,–	266,–	1119,–
Lid, galvanized	A	168,–	16,–	184,–
Castor Set, polyamide, Load capacity 1350 kg / castor set	A	192,–	15,–	207,–
Pick-up Profile on Type UC for Traverse Type UCT	A	106,–	0,–	106,–
UC 1000, painted	A	771,–	266,–	1037,–
Lid, galvanized	A	168,–	16,–	184,–
Castor Set, polyamide, Load capacity 1350 kg / castor set	A	192,–	15,–	207,–
Pick-up Profile on Type UC for Traverse Type UCT	A	106,–	0,–	106,–
UC 1000, hot-dip galvanized	A	894,–	266,–	1160,–
Lid, galvanized	A	168,–	16,–	184,–
Castor Set, polyamide, Load capacity 1350 kg / castor set	A	192,–	15,–	207,–
Pick-up Profile on Type UC for Traverse Type UCT	A	106,–	0,–	106,–

Hydraulic Traverse Type UCT	Category	Price	Freight charges	Price including freight charges
UCT, painted	A	2737,–	400,–	3137,–

Tilting Container Type VD	Category	Price	Freight charges	Price including freight charges
VD 500, painted	A	794,–	266,–	1060,–
Lid, galvanized	A	144,–	18,–	162,–
Castor Set, polyamide, Load capacity 1350 kg / castor set	A	192,–	15,–	207,–
Skip Body Welded Oil and Watertight	A	78,–	0,–	78,–
VD 500, hot-dip galvanized	A	1033,–	266,–	1299,–
Lid, galvanized	A	144,–	18,–	162,–
Castor Set, polyamide, Load capacity 1350 kg / castor set	A	192,–	15,–	207,–
Skip Body Welded Oil and Watertight	A	78,–	0,–	78,–
VD 650, painted	A	868,–	266,–	1134,–
Lid, galvanized	A	144,–	18,–	162,–
Castor Set, polyamide, Load capacity 1350 kg / castor set	A	192,–	15,–	207,–
Skip Body Welded Oil and Watertight	A	78,–	0,–	78,–
VD 650, hot-dip galvanized	A	1130,–	266,–	1396,–

Prices in EUR, valid EXW DE-46354 Südlohn, DE-38820 Halberstadt, unpacked
Freight charges valid CPT Norway, islands and oversea territories excluded

BAUER GmbH
Eichendorffstr. 62
46354 Südlohn, Germany

Tel. +49 2862 70 90
info@bauer-suedlohn.com
www.bauer-suedlohn.com

Geschäftsführer
Patrick Bauer, Pascal Bauer
Amtsgericht Coesfeld HRB 5259

TÜVNORD
TÜV NORD CERT GmbH
DIN EN ISO 9001
tuev-nord.de

Price List 0726 en-NO
Forklift Truck Attachments

Tilting Container Type VD	Category	Price	Freight charges	Price including freight charges
Lid, galvanized	A	144,–	18,–	162,–
Castor Set, polyamide, Load capacity 1350 kg / castor set	A	192,–	15,–	207,–
Skip Body Welded Oil and Watertight	A	78,–	0,–	78,–
VD 800, painted	A	991,–	266,–	1257,–
Lid, galvanized	A	174,–	22,–	196,–
Castor Set, polyamide, Load capacity 1350 kg / castor set	A	192,–	15,–	207,–
Skip Body Welded Oil and Watertight	A	78,–	0,–	78,–
VD 800, hot-dip galvanized	A	1346,–	266,–	1612,–
Lid, galvanized	A	174,–	22,–	196,–
Castor Set, polyamide, Load capacity 1350 kg / castor set	A	192,–	15,–	207,–
Skip Body Welded Oil and Watertight	A	78,–	0,–	78,–
VD 1000, painted	A	1041,–	266,–	1307,–
Lid, galvanized	A	174,–	22,–	196,–
Castor Set, polyamide, Load capacity 1350 kg / castor set	A	192,–	15,–	207,–
Skip Body Welded Oil and Watertight	A	121,–	0,–	121,–
VD 1000, hot-dip galvanized	A	1469,–	266,–	1735,–
Lid, galvanized	A	174,–	22,–	196,–
Castor Set, polyamide, Load capacity 1350 kg / castor set	A	192,–	15,–	207,–
Skip Body Welded Oil and Watertight	A	121,–	0,–	121,–

Tilting Container Type VG	Category	Price	Freight charges	Price including freight charges
VG 550, painted	A	812,–	266,–	1078,–
Lid, galvanized	A	144,–	18,–	162,–
Castor Set, polyamide, Load capacity 1350 kg / castor set	A	192,–	15,–	207,–
Skip Body Welded Oil and Watertight	A	78,–	0,–	78,–
VG 550, hot-dip galvanized	A	1058,–	266,–	1324,–
Lid, galvanized	A	144,–	18,–	162,–
Castor Set, polyamide, Load capacity 1350 kg / castor set	A	192,–	15,–	207,–
Skip Body Welded Oil and Watertight	A	78,–	0,–	78,–
VG 700, painted	A	962,–	266,–	1228,–
Lid, galvanized	A	144,–	18,–	162,–
Castor Set, polyamide, Load capacity 1350 kg / castor set	A	192,–	15,–	207,–
Skip Body Welded Oil and Watertight	A	78,–	0,–	78,–
VG 700, hot-dip galvanized	A	1252,–	266,–	1518,–
Lid, galvanized	A	144,–	18,–	162,–
Castor Set, polyamide, Load capacity 1350 kg / castor set	A	192,–	15,–	207,–
Skip Body Welded Oil and Watertight	A	78,–	0,–	78,–
VG 900, painted	A	1060,–	266,–	1326,–
Lid, galvanized	A	174,–	22,–	196,–
Castor Set, polyamide, Load capacity 1350 kg / castor set	A	192,–	15,–	207,–
Skip Body Welded Oil and Watertight	A	78,–	0,–	78,–
VG 900, hot-dip galvanized	A	1502,–	266,–	1768,–
Lid, galvanized	A	174,–	22,–	196,–
Castor Set, polyamide, Load capacity 1350 kg / castor set	A	192,–	15,–	207,–
Skip Body Welded Oil and Watertight	A	78,–	0,–	78,–
VG 1100, painted	A	1150,–	266,–	1416,–

Prices in EUR, valid EXW DE-46354 Südlohn, DE-38820 Halberstadt, unpacked
Freight charges valid CPT Norway, islands and oversea territories excluded

BAUER GmbH
Eichendorffstr. 62
46354 Südlohn, Germany

Tel. +49 2862 70 90
info@bauer-suedlohn.com
www.bauer-suedlohn.com

Geschäftsführer
Patrick Bauer, Pascal Bauer
Amtsgericht Coesfeld HRB 5259

TÜVNORD
TÜV NORD CERT GmbH
DIN EN ISO 9001
tuev-nord.de

Price List 0726 en-NO
Forklift Truck Attachments

Tilting Container Type VG	Category	Price	Freight charges	Price including freight charges
Lid, galvanized	A	174,–	22,–	196,–
Castor Set, polyamide, Load capacity 1350 kg / castor set	A	192,–	15,–	207,–
Skip Body Welded Oil and Watertight	A	121,–	0,–	121,–
VG 1100, hot-dip galvanized	A	1561,–	266,–	1827,–
Lid, galvanized	A	174,–	22,–	196,–
Castor Set, polyamide, Load capacity 1350 kg / castor set	A	192,–	15,–	207,–
Skip Body Welded Oil and Watertight	A	121,–	0,–	121,–

Prices in EUR, valid EXW DE-46354 Südlohn, DE-38820 Halberstadt, unpacked
Freight charges valid CPT Norway, islands and oversea territories excluded

BAUER GmbH
Eichendorffstr. 62
46354 Südlohn, Germany

Tel. +49 2862 70 90
info@bauer-suedlohn.com
www.bauer-suedlohn.com

Geschäftsführer
Patrick Bauer, Pascal Bauer
Amtsgericht Coesfeld HRB 5259

TÜVNORD
TÜV NORD CERT GmbH
DIN EN ISO 9001
tuev-nord.de

Price List 0726 en-NO
Workspace Material Handling

Battery Charging Station Type BL	Category	Price	Freight charges	Price including freight charges
BL 1, painted	A	1422,–	182,–	1604,–
Fire Extinguisher	A	204,–	14,–	218,–
Storage tray for water receptacle, painted	A	64,–	13,–	77,–
BL 2, painted	A	1798,–	182,–	1980,–
Fire Extinguisher	A	204,–	14,–	218,–
Storage tray for water receptacle, painted	A	64,–	13,–	77,–
BL 3, painted	A	1798,–	182,–	1980,–
Fire Extinguisher	A	204,–	14,–	218,–
Storage tray for water receptacle, painted	A	64,–	13,–	77,–

Drum Jack Roller Type FHR	Category	Price	Freight charges	Price including freight charges
FHR 600 F, painted	B	3286,–	400,–	3686,–
FHR 600 F, hot-dip galvanized	B	3641,–	400,–	4041,–
FHR 600 G, painted	B	2617,–	266,–	2883,–
FHR 600 G, hot-dip galvanized	B	2888,–	266,–	3154,–
FHR 600 K, painted	B	2617,–	266,–	2883,–
FHR 600 K, hot-dip galvanized	B	2888,–	266,–	3154,–

Drum Trolley Type FP-L	Category	Price	Freight charges	Price including freight charges
FP-L, galvanized	C	624,–	182,–	806,–

Drum Trolley Type FP-V	Category	Price	Freight charges	Price including freight charges
FP-V, galvanized	C	605,–	182,–	787,–

Drum Dolly Type FRW	Category	Price	Freight charges	Price including freight charges
FRW-I, hot-dip galvanized	A	116,–	70,–	186,–
FRW-II, hot-dip galvanized	A	154,–	70,–	224,–
FRW-III, hot-dip galvanized	A	207,–	182,–	389,–

Dolly Type GRW	Category	Price	Freight charges	Price including freight charges
GRW-I, hot-dip galvanized	F	126,–	70,–	196,–
Handle, hot-dip galvanized	F	55,–	10,–	65,–
GRW-II, hot-dip galvanized	F	143,–	70,–	213,–
Handle, hot-dip galvanized	F	55,–	10,–	65,–
GRW-III, hot-dip galvanized	F	179,–	182,–	361,–
Handle, hot-dip galvanized	F	55,–	10,–	65,–

Gas Cylinder Wall Bracket Type GWH	Category	Price	Freight charges	Price including freight charges
GWH 140-I, hot-dip galvanized	F	26,–	70,–	96,–
GWH 140-II, hot-dip galvanized	F	40,–	70,–	110,–

Prices in EUR, valid EXW DE-46354 Südlohn, DE-38820 Halberstadt, unpacked
Freight charges valid CPT Norway, islands and oversea territories excluded

BAUER GmbH
Eichendorffstr. 62
46354 Südlohn, Germany

Tel. +49 2862 70 90
info@bauer-suedlohn.com
www.bauer-suedlohn.com

Geschäftsführer
Patrick Bauer, Pascal Bauer
Amtsgericht Coesfeld HRB 5259

TÜVNORD
TÜV NORD CERT GmbH
DIN EN ISO 9001
tuev-nord.de

Price List 0726 en-NO
Workspace Material Handling

Gas Cylinder Wall Bracket Type GWH	Category	Price	Freight charges	Price including freight charges
GWH 140-III, hot-dip galvanized	F	59,–	70,–	129,–
GWH 230-I, hot-dip galvanized	F	28,–	70,–	98,–
GWH 230-II, hot-dip galvanized	F	43,–	70,–	113,–
GWH 230-III, hot-dip galvanized	F	65,–	70,–	135,–
GWH 320-I, hot-dip galvanized	F	29,–	70,–	99,–
GWH 320-II, hot-dip galvanized	F	48,–	70,–	118,–
GWH 320-III, hot-dip galvanized	F	72,–	70,–	142,–

Fork Lifter Type GZH-A	Category	Price	Freight charges	Price including freight charges
GZH-A, painted	F	114,–	70,–	184,–

Fork Lifter Type GZH-B	Category	Price	Freight charges	Price including freight charges
GZH-B, painted	F	114,–	70,–	184,–

Fork Pallet Type GZP	Category	Price	Freight charges	Price including freight charges
GZP 4, hot-dip galvanized	A	161,–	182,–	343,–
GZP 8, hot-dip galvanized	A	201,–	182,–	383,–

IBC Residue Drainer Type IR	Category	Price	Freight charges	Price including freight charges
IR-1, hot-dip galvanized	A	596,–	182,–	778,–
IR-2, hot-dip galvanized	A	711,–	182,–	893,–
IR-3, hot-dip galvanized	A	596,–	182,–	778,–

Tilting Canister Stand Type KAH	Category	Price	Freight charges	Price including freight charges
KAH-5, galvanized	A	96,–	70,–	166,–
KAH-25, galvanized	A	109,–	70,–	179,–
KAH-60, galvanized	A	140,–	70,–	210,–

Sheet Metal Storage Units With Trays Type KBR	Category	Price	Freight charges	Price including freight charges
KBR 1, painted	A	5985,–	1108,–	7093,–
KBR 2, painted	A	6207,–	on request	on request
KBR 3, painted	A	6667,–	on request	on request

Liftomat Type L/E	Category	Price	Freight charges	Price including freight charges
L/E 1300, painted	B	4908,–	400,–	5308,–
L/E 1300, hot-dip galvanized	B	5578,–	400,–	5978,–

Liftomat Type L/M	Category	Price	Freight charges	Price including freight charges
L/M 600, painted	B	3553,–	266,–	3819,–
L/M 600, hot-dip galvanized	B	4025,–	266,–	4291,–
L/M 1300, painted	B	3986,–	400,–	4386,–
L/M 1300, hot-dip galvanized	B	4569,–	400,–	4969,–

Prices in EUR, valid EXW DE-46354 Südlohn, DE-38820 Halberstadt, unpacked
Freight charges valid CPT Norway, islands and oversea territories excluded

BAUER GmbH
Eichendorffstr. 62
46354 Südlohn, Germany

Tel. +49 2862 70 90
info@bauer-suedlohn.com
www.bauer-suedlohn.com

Geschäftsführer
Patrick Bauer, Pascal Bauer
Amtsgericht Coesfeld HRB 5259

TÜVNORD
TÜV NORD CERT GmbH
DIN EN ISO 9001
tuev-nord.de

Price List 0726 en-NO
Workspace Material Handling

Security Cage for Storage Type LBM	Category	Price	Freight charges	Price including freight charges
LBM 1500, hot-dip galvanized	A	2002,–	400,–	2402,–
LBM 3000, hot-dip galvanized	A	2747,–	683,–	3430,–
LBM 4500, hot-dip galvanized	A	3492,–	683,–	4175,–
LBM 6000, hot-dip galvanized	A	4232,–	893,–	5125,–

Wheelie Bin Tipping Station Type MKS	Category	Price	Freight charges	Price including freight charges
MKS-12V, painted	A	3745,–	266,–	4011,–
External Charger for 12 V electro-hydraulic constructions	A	201,–	15,–	216,–
MKS-230V, painted	A	3745,–	266,–	4011,–

Wheelie Bin Tipping Station Type MKS-F	Category	Price	Freight charges	Price including freight charges
MKS-F, painted	A	2459,–	266,–	2725,–

Wheelie Bin Tipping Station Type MKS-H	Category	Price	Freight charges	Price including freight charges
MKS-H, painted	A	2459,–	266,–	2725,–

Stillage Transport Cage Type MTP	Category	Price	Freight charges	Price including freight charges
MTP 2000, hot-dip galvanized	A	2196,–	400,–	2596,–
Tension belt	A	48,–	8,–	56,–
MTP 3000, hot-dip galvanized	A	2774,–	504,–	3278,–
Tension belt	A	48,–	8,–	56,–

Two-Wheeled Pallet Picker Type PZ	Category	Price	Freight charges	Price including freight charges
PZ, hot-dip galvanized	F	456,–	70,–	526,–

Tyre Fitting Equipment Type RM	Category	Price	Freight charges	Price including freight charges
RM, painted	F	458,–	70,–	528,–

Surround for Waste Bins Type SECOMAT	Category	Price	Freight charges	Price including freight charges
S 120-D, powder coated	B	682,–	182,–	864,–
S 120-K, powder coated	B	764,–	182,–	946,–
S 240-D, powder coated	B	782,–	182,–	964,–
S 240-K, powder coated	B	856,–	182,–	1038,–
S1100, powder-coated	B	791,–	182,–	973,–
S1100-W, powder-coated	B	1040,–	266,–	1306,–
S1100-WT, powder-coated	B	1305,–	266,–	1571,–
S1100-WTB, powder-coated	B	1408,–	266,–	1674,–
S4USE, powder coated	C	2656,–	400,–	3056,–

Gas Cylinder Pallet Type SFP	Category	Price	Freight charges	Price including freight charges
SFP 4, hot-dip galvanized	C	346,–	182,–	528,–
SFP 8, hot-dip galvanized	C	460,–	266,–	726,–

Prices in EUR, valid EXW DE-46354 Südlohn, DE-38820 Halberstadt, unpacked
Freight charges valid CPT Norway, islands and oversea territories excluded

BAUER GmbH
Eichendorffstr. 62
46354 Südlohn, Germany

Tel. +49 2862 70 90
info@bauer-suedlohn.com
www.bauer-suedlohn.com

Geschäftsführer
Patrick Bauer, Pascal Bauer
Amtsgericht Coesfeld HRB 5259

TÜVNORD
TÜV NORD CERT GmbH
DIN EN ISO 9001
tuev-nord.de

Price List 0726 en-NO
Workspace Material Handling

Loading Support Type VS	Category	Price	Freight charges	Price including freight charges
VS, painted	C	765,–	266,–	1031,–

Prices in EUR, valid EXW DE-46354 Südlohn, DE-38820 Halberstadt, unpacked
Freight charges valid CPT Norway, islands and oversea territories excluded

BAUER GmbH
Eichendorffstr. 62
46354 Südlohn, Germany

Tel. +49 2862 70 90
info@bauer-suedlohn.com
www.bauer-suedlohn.com

Geschäftsführer
Patrick Bauer, Pascal Bauer
Amtsgericht Coesfeld HRB 5259

TÜVNORD
TÜV NORD CERT GmbH
DIN EN ISO 9001
tuev-nord.de

Price List 0726 en-NO
Environment / Storage

Sump Trays Type SERIES 2000	Category	Price	Freight charges	Price including freight charges
2000, painted	B	250,–	182,–	432,–
2000, hot-dip galvanized	B	288,–	182,–	470,–
2002, painted	B	285,–	182,–	467,–
2002, hot-dip galvanized	B	322,–	182,–	504,–
2008, painted	B	250,–	182,–	432,–
2008, hot-dip galvanized	B	300,–	182,–	482,–
2010, painted	B	301,–	182,–	483,–
Drum Support FA 60-1, hot-dip galvanized	B	109,–	15,–	124,–
Drum Support FA 60-2, hot-dip galvanized	B	118,–	18,–	136,–
Drum Support FA 60-3, hot-dip galvanized	B	138,–	21,–	159,–
Drum Support FA 200-1, hot-dip galvanized	B	118,–	15,–	133,–
Can Shelf Type GR-A, galvanized	B	138,–	70,–	208,–
Can Shelf Type GR-B, galvanized	B	138,–	70,–	208,–
Can Shelf Type GR-C, galvanized	B	138,–	70,–	208,–
2010, hot-dip galvanized	B	351,–	182,–	533,–
Drum Support FA 60-1, hot-dip galvanized	B	109,–	15,–	124,–
Drum Support FA 60-2, hot-dip galvanized	B	118,–	18,–	136,–
Drum Support FA 60-3, hot-dip galvanized	B	138,–	21,–	159,–
Drum Support FA 200-1, hot-dip galvanized	B	118,–	15,–	133,–
Can Shelf Type GR-A, galvanized	B	138,–	70,–	208,–
Can Shelf Type GR-B, galvanized	B	138,–	70,–	208,–
Can Shelf Type GR-C, galvanized	B	138,–	70,–	208,–
2016, painted	B	262,–	182,–	444,–
2016, hot-dip galvanized	B	314,–	182,–	496,–
2018, painted	B	315,–	182,–	497,–
Drum Support FA 60-1, hot-dip galvanized	B	109,–	15,–	124,–
Drum Support FA 60-2, hot-dip galvanized	B	118,–	18,–	136,–
Drum Support FA 60-3, hot-dip galvanized	B	138,–	21,–	159,–
Drum Support FA 200-1, hot-dip galvanized	B	118,–	15,–	133,–
Can Shelf Type GR-A, galvanized	B	138,–	70,–	208,–
Can Shelf Type GR-B, galvanized	B	138,–	70,–	208,–
Can Shelf Type GR-C, galvanized	B	138,–	70,–	208,–
2018, hot-dip galvanized	B	365,–	182,–	547,–
Drum Support FA 60-1, hot-dip galvanized	B	109,–	15,–	124,–
Drum Support FA 60-2, hot-dip galvanized	B	118,–	18,–	136,–
Drum Support FA 60-3, hot-dip galvanized	B	138,–	21,–	159,–
Drum Support FA 200-1, hot-dip galvanized	B	118,–	15,–	133,–
Can Shelf Type GR-A, galvanized	B	138,–	70,–	208,–
Can Shelf Type GR-B, galvanized	B	138,–	70,–	208,–
Can Shelf Type GR-C, galvanized	B	138,–	70,–	208,–
2026, painted	B	262,–	182,–	444,–
2026, hot-dip galvanized	B	310,–	182,–	492,–

Prices in EUR, valid EXW DE-46354 Südlohn, DE-38820 Halberstadt, unpacked
Freight charges valid CPT Norway, islands and oversea territories excluded

BAUER GmbH
Eichendorffstr. 62
46354 Südlohn, Germany

Tel. +49 2862 70 90
info@bauer-suedlohn.com
www.bauer-suedlohn.com

Geschäftsführer
Patrick Bauer, Pascal Bauer
Amtsgericht Coesfeld HRB 5259

TÜVNORD
TÜV NORD CERT GmbH
DIN EN ISO 9001
tuev-nord.de

Price List 0726 en-NO
Environment / Storage

Sump Trays Type SERIES 2000	Category	Price	Freight charges	Price including freight charges
2028, painted	B	366,–	182,–	548,–
Drum Support FA 60-1, hot-dip galvanized	B	109,–	15,–	124,–
Drum Support FA 60-2, hot-dip galvanized	B	118,–	18,–	136,–
Drum Support FA 60-3, hot-dip galvanized	B	138,–	21,–	159,–
Drum Support FA 200-1, hot-dip galvanized	B	118,–	15,–	133,–
Drum Support FA 200-2, hot-dip galvanized	B	138,–	22,–	160,–
Can Shelf Type GR-A, galvanized	B	138,–	70,–	208,–
Can Shelf Type GR-B, galvanized	B	138,–	70,–	208,–
Can Shelf Type GR-C, galvanized	B	138,–	70,–	208,–
2028, hot-dip galvanized	B	412,–	182,–	594,–
Drum Support FA 60-1, hot-dip galvanized	B	109,–	15,–	124,–
Drum Support FA 60-2, hot-dip galvanized	B	118,–	18,–	136,–
Drum Support FA 60-3, hot-dip galvanized	B	138,–	21,–	159,–
Drum Support FA 200-1, hot-dip galvanized	B	118,–	15,–	133,–
Drum Support FA 200-2, hot-dip galvanized	B	138,–	22,–	160,–
Can Shelf Type GR-A, galvanized	B	138,–	70,–	208,–
Can Shelf Type GR-B, galvanized	B	138,–	70,–	208,–
Can Shelf Type GR-C, galvanized	B	138,–	70,–	208,–
2030, painted	B	275,–	182,–	457,–
2030, hot-dip galvanized	B	321,–	182,–	503,–
2032, painted	B	378,–	182,–	560,–
Drum Support FA 60-1, hot-dip galvanized	B	109,–	15,–	124,–
Drum Support FA 60-2, hot-dip galvanized	B	118,–	18,–	136,–
Drum Support FA 60-3, hot-dip galvanized	B	138,–	21,–	159,–
Drum Support FA 200-1, hot-dip galvanized	B	118,–	15,–	133,–
Drum Support FA 200-2, hot-dip galvanized	B	138,–	22,–	160,–
Can Shelf Type GR-A, galvanized	B	138,–	70,–	208,–
Can Shelf Type GR-B, galvanized	B	138,–	70,–	208,–
Can Shelf Type GR-C, galvanized	B	138,–	70,–	208,–
2032, hot-dip galvanized	B	426,–	182,–	608,–
Drum Support FA 60-1, hot-dip galvanized	B	109,–	15,–	124,–
Drum Support FA 60-2, hot-dip galvanized	B	118,–	18,–	136,–
Drum Support FA 60-3, hot-dip galvanized	B	138,–	21,–	159,–
Drum Support FA 200-1, hot-dip galvanized	B	118,–	15,–	133,–
Drum Support FA 200-2, hot-dip galvanized	B	138,–	22,–	160,–
Can Shelf Type GR-A, galvanized	B	138,–	70,–	208,–
Can Shelf Type GR-B, galvanized	B	138,–	70,–	208,–
Can Shelf Type GR-C, galvanized	B	138,–	70,–	208,–
2040, painted	B	351,–	182,–	533,–
2040, hot-dip galvanized	B	426,–	182,–	608,–
2042, painted	B	455,–	266,–	721,–
Drum Support FA 60-1, hot-dip galvanized	B	109,–	15,–	124,–
Drum Support FA 60-2, hot-dip galvanized	B	118,–	18,–	136,–
Drum Support FA 60-3, hot-dip galvanized	B	138,–	21,–	159,–
Can Shelf Type GR-A, galvanized	B	138,–	70,–	208,–
Can Shelf Type GR-B, galvanized	B	138,–	70,–	208,–

Prices in EUR, valid EXW DE-46354 Südlohn, DE-38820 Halberstadt, unpacked
Freight charges valid CPT Norway, islands and oversea territories excluded

BAUER GmbH
Eichendorffstr. 62
46354 Südlohn, Germany

Tel. +49 2862 70 90
info@bauer-suedlohn.com
www.bauer-suedlohn.com

Geschäftsführer
Patrick Bauer, Pascal Bauer
Amtsgericht Coesfeld HRB 5259

TÜVNORD
TÜV NORD CERT GmbH
DIN EN ISO 9001
tuev-nord.de

Price List 0726 en-NO
Environment / Storage

Sump Trays Type SERIES 2000	Category	Price	Freight charges	Price including freight charges
Can Shelf Type GR-C, galvanized	B	138,–	70,–	208,–
2042, hot-dip galvanized	B	529,–	266,–	795,–
Drum Support FA 60-1, hot-dip galvanized	B	109,–	15,–	124,–
Drum Support FA 60-2, hot-dip galvanized	B	118,–	18,–	136,–
Drum Support FA 60-3, hot-dip galvanized	B	138,–	21,–	159,–
Can Shelf Type GR-A, galvanized	B	138,–	70,–	208,–
Can Shelf Type GR-B, galvanized	B	138,–	70,–	208,–
Can Shelf Type GR-C, galvanized	B	138,–	70,–	208,–
2048, painted	B	271,–	182,–	453,–
2048, hot-dip galvanized	B	316,–	182,–	498,–
2050, painted	B	369,–	182,–	551,–
Drum Support FA 60-1, hot-dip galvanized	B	109,–	15,–	124,–
Drum Support FA 60-2, hot-dip galvanized	B	118,–	18,–	136,–
Drum Support FA 60-3, hot-dip galvanized	B	138,–	21,–	159,–
Can Shelf Type GR-A, galvanized	B	138,–	70,–	208,–
Can Shelf Type GR-B, galvanized	B	138,–	70,–	208,–
Can Shelf Type GR-C, galvanized	B	138,–	70,–	208,–
2050, hot-dip galvanized	B	414,–	182,–	596,–
Drum Support FA 60-1, hot-dip galvanized	B	109,–	15,–	124,–
Drum Support FA 60-2, hot-dip galvanized	B	118,–	18,–	136,–
Drum Support FA 60-3, hot-dip galvanized	B	138,–	21,–	159,–
Can Shelf Type GR-A, galvanized	B	138,–	70,–	208,–
Can Shelf Type GR-B, galvanized	B	138,–	70,–	208,–
Can Shelf Type GR-C, galvanized	B	138,–	70,–	208,–

Sump Trays Type SERIES 2000/SW	Category	Price	Freight charges	Price including freight charges
2002/SW, painted	B	427,–	182,–	609,–
2002/SW, hot-dip galvanized	B	464,–	182,–	646,–
2018/SW, painted	B	468,–	266,–	734,–
Drum Support FA 60-1, hot-dip galvanized	B	109,–	15,–	124,–
Drum Support FA 60-2, hot-dip galvanized	B	118,–	18,–	136,–
Drum Support FA 60-3, hot-dip galvanized	B	138,–	21,–	159,–
Drum Support FA 200-1, hot-dip galvanized	B	118,–	15,–	133,–
Can Shelf Type GR-A, galvanized	B	138,–	70,–	208,–
Can Shelf Type GR-B, galvanized	B	138,–	70,–	208,–
Can Shelf Type GR-C, galvanized	B	138,–	70,–	208,–
2018/SW, hot-dip galvanized	B	517,–	266,–	783,–
Drum Support FA 60-1, hot-dip galvanized	B	109,–	15,–	124,–
Drum Support FA 60-2, hot-dip galvanized	B	118,–	18,–	136,–
Drum Support FA 60-3, hot-dip galvanized	B	138,–	21,–	159,–
Drum Support FA 200-1, hot-dip galvanized	B	118,–	15,–	133,–
Can Shelf Type GR-A, galvanized	B	138,–	70,–	208,–
Can Shelf Type GR-B, galvanized	B	138,–	70,–	208,–
Can Shelf Type GR-C, galvanized	B	138,–	70,–	208,–
2032/SW, painted	B	552,–	266,–	818,–
Drum Support FA 60-1, hot-dip galvanized	B	109,–	15,–	124,–

Prices in EUR, valid EXW DE-46354 Südlohn, DE-38820 Halberstadt, unpacked
Freight charges valid CPT Norway, islands and oversea territories excluded

BAUER GmbH
Eichendorffstr. 62
46354 Südlohn, Germany

Tel. +49 2862 70 90
info@bauer-suedlohn.com
www.bauer-suedlohn.com

Geschäftsführer
Patrick Bauer, Pascal Bauer
Amtsgericht Coesfeld HRB 5259

TÜVNORD
TÜV NORD CERT GmbH
DIN EN ISO 9001
tuev-nord.de

Price List 0726 en-NO
Environment / Storage

Sump Trays Type SERIES 2000/SW	Category	Price	Freight charges	Price including freight charges
Drum Support FA 60-2, hot-dip galvanized	B	118,–	18,–	136,–
Drum Support FA 60-3, hot-dip galvanized	B	138,–	21,–	159,–
Drum Support FA 200-1, hot-dip galvanized	B	118,–	15,–	133,–
Drum Support FA 200-2, hot-dip galvanized	B	138,–	22,–	160,–
Can Shelf Type GR-A, galvanized	B	138,–	70,–	208,–
Can Shelf Type GR-B, galvanized	B	138,–	70,–	208,–
Can Shelf Type GR-C, galvanized	B	138,–	70,–	208,–
2032/SW, hot-dip galvanized	B	600,–	266,–	866,–
Drum Support FA 60-1, hot-dip galvanized	B	109,–	15,–	124,–
Drum Support FA 60-2, hot-dip galvanized	B	118,–	18,–	136,–
Drum Support FA 60-3, hot-dip galvanized	B	138,–	21,–	159,–
Drum Support FA 200-1, hot-dip galvanized	B	118,–	15,–	133,–
Drum Support FA 200-2, hot-dip galvanized	B	138,–	22,–	160,–
Can Shelf Type GR-A, galvanized	B	138,–	70,–	208,–
Can Shelf Type GR-B, galvanized	B	138,–	70,–	208,–
Can Shelf Type GR-C, galvanized	B	138,–	70,–	208,–
2042/SW, painted	B	685,–	320,–	1005,–
Drum Support FA 60-1, hot-dip galvanized	B	109,–	15,–	124,–
Drum Support FA 60-2, hot-dip galvanized	B	118,–	18,–	136,–
Drum Support FA 60-3, hot-dip galvanized	B	138,–	21,–	159,–
Can Shelf Type GR-A, galvanized	B	138,–	70,–	208,–
Can Shelf Type GR-B, galvanized	B	138,–	70,–	208,–
Can Shelf Type GR-C, galvanized	B	138,–	70,–	208,–
2042/SW, hot-dip galvanized	B	760,–	320,–	1080,–
Drum Support FA 60-1, hot-dip galvanized	B	109,–	15,–	124,–
Drum Support FA 60-2, hot-dip galvanized	B	118,–	18,–	136,–
Drum Support FA 60-3, hot-dip galvanized	B	138,–	21,–	159,–
Can Shelf Type GR-A, galvanized	B	138,–	70,–	208,–
Can Shelf Type GR-B, galvanized	B	138,–	70,–	208,–
Can Shelf Type GR-C, galvanized	B	138,–	70,–	208,–

Mobile Sump Trays Type SERIES 2000	Category	Price	Freight charges	Price including freight charges
2004, painted	B	590,–	182,–	772,–
Fixture and Tension Belt for 1 x 200 Litre Drum	B	48,–	9,–	57,–
2004, hot-dip galvanized	B	657,–	182,–	839,–
Fixture and Tension Belt for 1 x 200 Litre Drum	B	48,–	9,–	57,–
2020, painted	B	656,–	182,–	838,–
Fixture and Tension Belt for 2 x 200 Litre Drums	B	48,–	9,–	57,–
2020, hot-dip galvanized	B	717,–	182,–	899,–
Fixture and Tension Belt for 2 x 200 Litre Drums	B	48,–	9,–	57,–
2050 SR, painted	B	709,–	182,–	891,–
Fixture and Tension Belt for 3 x 200 Litre Drums	B	48,–	9,–	57,–
2050 SR, hot-dip galvanized	B	766,–	266,–	1032,–
Fixture and Tension Belt for 3 x 200 Litre Drums	B	48,–	9,–	57,–

Prices in EUR, valid EXW DE-46354 Südlohn, DE-38820 Halberstadt, unpacked
Freight charges valid CPT Norway, islands and oversea territories excluded

BAUER GmbH
Eichendorffstr. 62
46354 Südlohn, Germany

Tel. +49 2862 70 90
info@bauer-suedlohn.com
www.bauer-suedlohn.com

Geschäftsführer
Patrick Bauer, Pascal Bauer
Amtsgericht Coesfeld HRB 5259

TÜVNORD
TÜV NORD CERT GmbH
DIN EN ISO 9001
tuev-nord.de

Price List 0726 en-NO
Environment / Storage

Drum Shelves with Sump Trays Type SERIES 3000	Category	Price	Freight charges	Price including freight charges
3000, hot-dip galvanized	B	1091,–	266,–	1357,–
Retainer Bar	B	48,–	12,–	60,–
Rotating Support RA 200, hot-dip galvanized	B	97,–	10,–	107,–
Can Stand Type GS, hot-dip galvanized	B	65,–	18,–	83,–
Crash Guard	B	75,–	9,–	84,–
3001, hot-dip galvanized	B	919,–	266,–	1185,–
Retainer Bar	B	48,–	12,–	60,–
Rotating Support RA 200, hot-dip galvanized	B	97,–	10,–	107,–
Can Stand Type GS, hot-dip galvanized	B	65,–	18,–	83,–
Crash Guard	B	75,–	9,–	84,–
3002, hot-dip galvanized	B	1299,–	320,–	1619,–
Retainer Bar	B	48,–	12,–	60,–
Rotating Support RA 200, hot-dip galvanized	B	97,–	10,–	107,–
Can Stand Type GS, hot-dip galvanized	B	65,–	18,–	83,–
Crash Guard	B	75,–	9,–	84,–
3003, hot-dip galvanized	B	1101,–	320,–	1421,–
Retainer Bar	B	48,–	12,–	60,–
Rotating Support RA 200, hot-dip galvanized	B	97,–	10,–	107,–
Can Stand Type GS, hot-dip galvanized	B	65,–	18,–	83,–
Crash Guard	B	75,–	9,–	84,–
3004, hot-dip galvanized	B	1344,–	266,–	1610,–
Retainer Bar	B	48,–	12,–	60,–
Rotating Support RA 60, hot-dip galvanized	B	97,–	9,–	106,–
Can Stand Type GS, hot-dip galvanized	B	65,–	18,–	83,–
Crash Guard	B	75,–	9,–	84,–
3005, hot-dip galvanized	B	1216,–	266,–	1482,–
Retainer Bar	B	48,–	12,–	60,–
Rotating Support RA 60, hot-dip galvanized	B	97,–	9,–	106,–
Can Stand Type GS, hot-dip galvanized	B	65,–	18,–	83,–
Crash Guard	B	75,–	9,–	84,–
3006, hot-dip galvanized	B	1697,–	453,–	2150,–
Retainer Bar	B	48,–	12,–	60,–
Rotating Support RA 60, hot-dip galvanized	B	97,–	9,–	106,–
Can Stand Type GS, hot-dip galvanized	B	65,–	18,–	83,–
Crash Guard	B	75,–	9,–	84,–
3007, hot-dip galvanized	B	1449,–	320,–	1769,–
Retainer Bar	B	48,–	12,–	60,–
Rotating Support RA 60, hot-dip galvanized	B	97,–	9,–	106,–
Can Stand Type GS, hot-dip galvanized	B	65,–	18,–	83,–
Crash Guard	B	75,–	9,–	84,–
3010, hot-dip galvanized	B	1288,–	320,–	1608,–
Retainer Bar	B	48,–	12,–	60,–
Rotating Support RA 200, hot-dip galvanized	B	97,–	10,–	107,–
Can Stand Type GS, hot-dip galvanized	B	65,–	18,–	83,–
Crash Guard	B	75,–	9,–	84,–
3011, hot-dip galvanized	B	1071,–	320,–	1391,–

Prices in EUR, valid EXW DE-46354 Südlohn, DE-38820 Halberstadt, unpacked
Freight charges valid CPT Norway, islands and oversea territories excluded

BAUER GmbH
Eichendorffstr. 62
46354 Südlohn, Germany

Tel. +49 2862 70 90
info@bauer-suedlohn.com
www.bauer-suedlohn.com

Geschäftsführer
Patrick Bauer, Pascal Bauer
Amtsgericht Coesfeld HRB 5259

TÜVNORD
TÜV NORD CERT GmbH
DIN EN ISO 9001
tuev-nord.de

Price List 0726 en-NO
Environment / Storage

Drum Shelves with Sump Trays Type SERIES 3000	Category	Price	Freight charges	Price including freight charges
Retainer Bar	B	48,–	12,–	60,–
Rotating Support RA 200, hot-dip galvanized	B	97,–	10,–	107,–
Can Stand Type GS, hot-dip galvanized	B	65,–	18,–	83,–
Crash Guard	B	75,–	9,–	84,–

Small Can Shelves with Sumps Type SERIES 3000	Category	Price	Freight charges	Price including freight charges
3017-4E, galvanized	B	478,–	182,–	660,–
3018-4E, galvanized	B	397,–	182,–	579,–
3019-4E, galvanized	B	576,–	266,–	842,–
3020-4E, galvanized	B	493,–	266,–	759,–
3021-4E, galvanized	B	719,–	266,–	985,–
3022-4E, galvanized	B	626,–	182,–	808,–
3023-4E, galvanized	B	1162,–	320,–	1482,–
3024-4E, galvanized	B	968,–	320,–	1288,–

Shelves Type AG	Category	Price	Freight charges	Price including freight charges
AG 60-1, hot-dip galvanized	B	112,–	12,–	124,–
AG 60-2, hot-dip galvanized	B	117,–	14,–	131,–
AG 60-3, hot-dip galvanized	B	126,–	15,–	141,–

Sump Tray Type AM	Category	Price	Freight charges	Price including freight charges
AM-1, painted	B	335,–	182,–	517,–
AM-1, hot-dip galvanized	B	379,–	182,–	561,–
AM-2, painted	B	370,–	182,–	552,–
Drum Support FA 60-1, hot-dip galvanized	B	109,–	15,–	124,–
Drum Support FA 60-2, hot-dip galvanized	B	118,–	18,–	136,–
Drum Support FA 60-3, hot-dip galvanized	B	138,–	21,–	159,–
Drum Support FA 200-1, hot-dip galvanized	B	118,–	15,–	133,–
Can Shelf Type GR-A, galvanized	B	138,–	70,–	208,–
Can Shelf Type GR-B, galvanized	B	138,–	70,–	208,–
Can Shelf Type GR-C, galvanized	B	138,–	70,–	208,–
AM-2, hot-dip galvanized	B	427,–	182,–	609,–
Drum Support FA 60-1, hot-dip galvanized	B	109,–	15,–	124,–
Drum Support FA 60-2, hot-dip galvanized	B	118,–	18,–	136,–
Drum Support FA 60-3, hot-dip galvanized	B	138,–	21,–	159,–
Drum Support FA 200-1, hot-dip galvanized	B	118,–	15,–	133,–
Can Shelf Type GR-A, galvanized	B	138,–	70,–	208,–
Can Shelf Type GR-B, galvanized	B	138,–	70,–	208,–
Can Shelf Type GR-C, galvanized	B	138,–	70,–	208,–
AM-4/A, painted	B	443,–	182,–	625,–
Drum Support FA 60-1, hot-dip galvanized	B	109,–	15,–	124,–
Drum Support FA 60-2, hot-dip galvanized	B	118,–	18,–	136,–
Drum Support FA 60-3, hot-dip galvanized	B	138,–	21,–	159,–
Drum Support FA 200-1, hot-dip galvanized	B	118,–	15,–	133,–
Drum Support FA 200-2, hot-dip galvanized	B	138,–	22,–	160,–

Prices in EUR, valid EXW DE-46354 Südlohn, DE-38820 Halberstadt, unpacked
Freight charges valid CPT Norway, islands and oversea territories excluded

BAUER GmbH
Eichendorffstr. 62
46354 Südlohn, Germany

Tel. +49 2862 70 90
info@bauer-suedlohn.com
www.bauer-suedlohn.com

Geschäftsführer
Patrick Bauer, Pascal Bauer
Amtsgericht Coesfeld HRB 5259

TÜVNORD
TÜV NORD CERT GmbH
DIN EN ISO 9001
tuev-nord.de

Price List 0726 en-NO
Environment / Storage

Sump Tray Type AM	Category	Price	Freight charges	Price including freight charges
Can Shelf Type GR-A, galvanized	B	138,–	70,–	208,–
Can Shelf Type GR-B, galvanized	B	138,–	70,–	208,–
Can Shelf Type GR-C, galvanized	B	138,–	70,–	208,–
AM-4/A, hot-dip galvanized	B	499,–	266,–	765,–
Drum Support FA 60-1, hot-dip galvanized	B	109,–	15,–	124,–
Drum Support FA 60-2, hot-dip galvanized	B	118,–	18,–	136,–
Drum Support FA 60-3, hot-dip galvanized	B	138,–	21,–	159,–
Drum Support FA 200-1, hot-dip galvanized	B	118,–	15,–	133,–
Drum Support FA 200-2, hot-dip galvanized	B	138,–	22,–	160,–
Can Shelf Type GR-A, galvanized	B	138,–	70,–	208,–
Can Shelf Type GR-B, galvanized	B	138,–	70,–	208,–
Can Shelf Type GR-C, galvanized	B	138,–	70,–	208,–
AM-4/B, painted	B	532,–	266,–	798,–
Drum Support FA 60-1, hot-dip galvanized	B	109,–	15,–	124,–
Drum Support FA 60-2, hot-dip galvanized	B	118,–	18,–	136,–
Drum Support FA 60-3, hot-dip galvanized	B	138,–	21,–	159,–
Can Shelf Type GR-A, galvanized	B	138,–	70,–	208,–
Can Shelf Type GR-B, galvanized	B	138,–	70,–	208,–
Can Shelf Type GR-C, galvanized	B	138,–	70,–	208,–
AM-4/B, hot-dip galvanized	B	624,–	266,–	890,–
Drum Support FA 60-1, hot-dip galvanized	B	109,–	15,–	124,–
Drum Support FA 60-2, hot-dip galvanized	B	118,–	18,–	136,–
Drum Support FA 60-3, hot-dip galvanized	B	138,–	21,–	159,–
Can Shelf Type GR-A, galvanized	B	138,–	70,–	208,–
Can Shelf Type GR-B, galvanized	B	138,–	70,–	208,–
Can Shelf Type GR-C, galvanized	B	138,–	70,–	208,–

Sump Tray Type AO	Category	Price	Freight charges	Price including freight charges
AO-1, painted	B	292,–	182,–	474,–
AO-1, hot-dip galvanized	B	337,–	182,–	519,–
AO-2, painted	B	310,–	182,–	492,–
AO-2, hot-dip galvanized	B	367,–	182,–	549,–
AO-4/A, painted	B	322,–	182,–	504,–
AO-4/A, hot-dip galvanized	B	378,–	182,–	560,–
AO-4/B, painted	B	412,–	182,–	594,–
AO-4/B, hot-dip galvanized	B	500,–	182,–	682,–

Sump Tray Type AW	Category	Price	Freight charges	Price including freight charges
AW 450, painted	B	641,–	266,–	907,–
AW 450, hot-dip galvanized	B	795,–	266,–	1061,–
AW 800, painted	B	667,–	266,–	933,–
AW 800, hot-dip galvanized	B	831,–	266,–	1097,–
AW 1000, painted	B	672,–	266,–	938,–
AW 1000, hot-dip galvanized	B	838,–	266,–	1104,–
AW 1000-2, painted	B	861,–	453,–	1314,–

Prices in EUR, valid EXW DE-46354 Südlohn, DE-38820 Halberstadt, unpacked
Freight charges valid CPT Norway, islands and oversea territories excluded

BAUER GmbH
Eichendorffstr. 62
46354 Südlohn, Germany

Tel. +49 2862 70 90
info@bauer-suedlohn.com
www.bauer-suedlohn.com

Geschäftsführer
Patrick Bauer, Pascal Bauer
Amtsgericht Coesfeld HRB 5259

TÜVNORD
TÜV NORD CERT GmbH
DIN EN ISO 9001
tuev-nord.de

Price List 0726 en-NO
Environment / Storage

Sump Tray Type AW	Category	Price	Freight charges	Price including freight charges
AW 1000-2, hot-dip galvanized	B	966,–	453,–	1419,–
AW 1000-3, painted	B	1524,–	453,–	1977,–
AW 1000-3, hot-dip galvanized	B	1641,–	557,–	2198,–
AW 1000-10F, painted	B	1032,–	453,–	1485,–
AW 1000-10F, hot-dip galvanized	B	1195,–	453,–	1648,–

Sump Tray Type AW/SW	Category	Price	Freight charges	Price including freight charges
AW 450/SW, painted	B	844,–	266,–	1110,–
AW 450/SW, hot-dip galvanized	B	998,–	400,–	1398,–
AW 800/SW, painted	B	869,–	400,–	1269,–
AW 800/SW, hot-dip galvanized	B	1032,–	400,–	1432,–
AW 1000/SW, painted	B	874,–	400,–	1274,–
AW 1000/SW, hot-dip galvanized	B	1042,–	400,–	1442,–
AW 1000-2/SW, painted	B	1091,–	453,–	1544,–
AW 1000-2/SW, hot-dip galvanized	B	1196,–	557,–	1753,–
AW 1000-3/SW, painted	B	1787,–	on request	on request
AW 1000-3/SW, hot-dip galvanized	B	2121,–	on request	on request
AW 1000-10F/SW, painted	B	1387,–	557,–	1944,–
AW 1000-10F/SW, hot-dip galvanized	B	1548,–	557,–	2105,–

Mobile Sump Tray AW 60-1 SR	Category	Price	Freight charges	Price including freight charges
AW 60-1 SR, painted	B	325,–	182,–	507,–
Fixture and Tension belt for 2 x 60 Litre Drums	B	45,–	8,–	53,–
AW 60-1 SR, hot-dip galvanized	B	345,–	182,–	527,–
Fixture and Tension belt for 2 x 60 Litre Drums	B	45,–	8,–	53,–

Mobile Sump Tray AW 60-1 SRF	Category	Price	Freight charges	Price including freight charges
AW 60-1 SRF, painted	B	429,–	182,–	611,–
AW 60-1 SRF, hot-dip galvanized	B	451,–	182,–	633,–

Sump Tray Type AW 60	Category	Price	Freight charges	Price including freight charges
AW 60-1, painted	B	176,–	70,–	246,–
Grid GR 60-1, hot-dip galvanized	B	23,–	8,–	31,–
Drum Suppport FA 60-A, galvanized	B	25,–	8,–	33,–
Rotating Support RA 60-A, hot-dip galvanized	B	97,–	9,–	106,–
AG 60-1, hot-dip galvanized	B	112,–	12,–	124,–
Canister Stand AB, galvanized	B	19,–	8,–	27,–
Castor Set, polyamide, Load capacity 375 kg / castor set	B	86,–	15,–	101,–
AW 60-1, hot-dip galvanized	B	189,–	70,–	259,–
Grid GR 60-1, hot-dip galvanized	B	23,–	8,–	31,–
Drum Suppport FA 60-A, galvanized	B	25,–	8,–	33,–
Rotating Support RA 60-A, hot-dip galvanized	B	97,–	9,–	106,–
AG 60-1, hot-dip galvanized	B	112,–	12,–	124,–
Canister Stand AB, galvanized	B	19,–	8,–	27,–
Castor Set, polyamide, Load capacity 375 kg / castor set	B	86,–	15,–	101,–

Prices in EUR, valid EXW DE-46354 Südlohn, DE-38820 Halberstadt, unpacked
Freight charges valid CPT Norway, islands and oversea territories excluded

BAUER GmbH
Eichendorffstr. 62
46354 Südlohn, Germany

Tel. +49 2862 70 90
info@bauer-suedlohn.com
www.bauer-suedlohn.com

Geschäftsführer
Patrick Bauer, Pascal Bauer
Amtsgericht Coesfeld HRB 5259

TÜVNORD
TÜV NORD CERT GmbH
DIN EN ISO 9001
tuev-nord.de

Price List 0726 en-NO
Environment / Storage

Sump Tray Type AW 60	Category	Price	Freight charges	Price including freight charges
AW 60-2, painted	B	177,–	182,–	359,–
Grid GR 60-2, hot-dip galvanized	B	27,–	12,–	39,–
Drum Suppport FA 60-A, galvanized	B	25,–	8,–	33,–
Rotating Support RA 60-A, hot-dip galvanized	B	97,–	9,–	106,–
AG 60-2, hot-dip galvanized	B	117,–	14,–	131,–
Canister Stand AB, galvanized	B	19,–	8,–	27,–
Castor Set, polyamide, Load capacity 375 kg / castor set	B	86,–	15,–	101,–
AW 60-2, hot-dip galvanized	B	195,–	182,–	377,–
Grid GR 60-2, hot-dip galvanized	B	27,–	12,–	39,–
Drum Suppport FA 60-A, galvanized	B	25,–	8,–	33,–
Rotating Support RA 60-A, hot-dip galvanized	B	97,–	9,–	106,–
AG 60-2, hot-dip galvanized	B	117,–	14,–	131,–
Canister Stand AB, galvanized	B	19,–	8,–	27,–
Castor Set, polyamide, Load capacity 375 kg / castor set	B	86,–	15,–	101,–
AW 60-3, painted	B	193,–	182,–	375,–
Grid GR 60-3, hot-dip galvanized	B	40,–	14,–	54,–
Drum Suppport FA 60-A, galvanized	B	25,–	8,–	33,–
Rotating Support RA 60-A, hot-dip galvanized	B	97,–	9,–	106,–
AG 60-3, hot-dip galvanized	B	126,–	15,–	141,–
Canister Stand AB, galvanized	B	19,–	8,–	27,–
Castor Set, polyamide, Load capacity 375 kg / castor set	B	86,–	15,–	101,–
AW 60-3, hot-dip galvanized	B	217,–	182,–	399,–
Grid GR 60-3, hot-dip galvanized	B	40,–	14,–	54,–
Drum Suppport FA 60-A, galvanized	B	25,–	8,–	33,–
Rotating Support RA 60-A, hot-dip galvanized	B	97,–	9,–	106,–
AG 60-3, hot-dip galvanized	B	126,–	15,–	141,–
Canister Stand AB, galvanized	B	19,–	8,–	27,–
Castor Set, polyamide, Load capacity 375 kg / castor set	B	86,–	15,–	101,–

Sump Tray Type AW 60/M	Category	Price	Freight charges	Price including freight charges
AW 60-1/M, painted	B	196,–	182,–	378,–
Drum Suppport FA 60-A, galvanized	B	25,–	8,–	33,–
Rotating Support RA 60-A, hot-dip galvanized	B	97,–	9,–	106,–
AG 60-1, hot-dip galvanized	B	112,–	12,–	124,–
Canister Stand AB, galvanized	B	19,–	8,–	27,–
Castor Set, polyamide, Load capacity 375 kg / castor set	B	86,–	15,–	101,–
AW 60-1/M, hot-dip galvanized	B	211,–	182,–	393,–
Drum Suppport FA 60-A, galvanized	B	25,–	8,–	33,–
Rotating Support RA 60-A, hot-dip galvanized	B	97,–	9,–	106,–
AG 60-1, hot-dip galvanized	B	112,–	12,–	124,–
Canister Stand AB, galvanized	B	19,–	8,–	27,–
Castor Set, polyamide, Load capacity 375 kg / castor set	B	86,–	15,–	101,–
AW 60-2/M, painted	B	203,–	182,–	385,–
Drum Suppport FA 60-A, galvanized	B	25,–	8,–	33,–
Drum Support FA 60-2, hot-dip galvanized	B	118,–	18,–	136,–
Rotating Support RA 60-A, hot-dip galvanized	B	97,–	9,–	106,–

Prices in EUR, valid EXW DE-46354 Südlohn, DE-38820 Halberstadt, unpacked
Freight charges valid CPT Norway, islands and oversea territories excluded

BAUER GmbH
Eichendorffstr. 62
46354 Südlohn, Germany

Tel. +49 2862 70 90
info@bauer-suedlohn.com
www.bauer-suedlohn.com

Geschäftsführer
Patrick Bauer, Pascal Bauer
Amtsgericht Coesfeld HRB 5259

TÜVNORD
TÜV NORD CERT GmbH
DIN EN ISO 9001
tuev-nord.de

Price List 0726 en-NO
Environment / Storage

Sump Tray Type AW 60/M	Category	Price	Freight charges	Price including freight charges
AG 60-2, hot-dip galvanized	B	117,–	14,–	131,–
Canister Stand AB, galvanized	B	19,–	8,–	27,–
Castor Set, polyamide, Load capacity 375 kg / castor set	B	86,–	15,–	101,–
AW 60-2/M, hot-dip galvanized	B	221,–	182,–	403,–
Drum Suppport FA 60-A, galvanized	B	25,–	8,–	33,–
Drum Support FA 60-2, hot-dip galvanized	B	118,–	18,–	136,–
Rotating Support RA 60-A, hot-dip galvanized	B	97,–	9,–	106,–
AG 60-2, hot-dip galvanized	B	117,–	14,–	131,–
Canister Stand AB, galvanized	B	19,–	8,–	27,–
Castor Set, polyamide, Load capacity 375 kg / castor set	B	86,–	15,–	101,–
AW 60-3/M, painted	B	232,–	182,–	414,–
Drum Suppport FA 60-A, galvanized	B	25,–	8,–	33,–
Drum Support FA 60-2, hot-dip galvanized	B	118,–	18,–	136,–
Drum Support FA 60-3, hot-dip galvanized	B	138,–	21,–	159,–
Rotating Support RA 60-A, hot-dip galvanized	B	97,–	9,–	106,–
AG 60-3, hot-dip galvanized	B	126,–	15,–	141,–
Canister Stand AB, galvanized	B	19,–	8,–	27,–
Castor Set, polyamide, Load capacity 375 kg / castor set	B	86,–	15,–	101,–
AW 60-3/M, hot-dip galvanized	B	254,–	182,–	436,–
Drum Suppport FA 60-A, galvanized	B	25,–	8,–	33,–
Drum Support FA 60-2, hot-dip galvanized	B	118,–	18,–	136,–
Drum Support FA 60-3, hot-dip galvanized	B	138,–	21,–	159,–
Rotating Support RA 60-A, hot-dip galvanized	B	97,–	9,–	106,–
AG 60-3, hot-dip galvanized	B	126,–	15,–	141,–
Canister Stand AB, galvanized	B	19,–	8,–	27,–
Castor Set, polyamide, Load capacity 375 kg / castor set	B	86,–	15,–	101,–

Sump Tray Type AW/PE	Category	Price	Freight charges	Price including freight charges
AW-1/PE, painted	B	658,–	182,–	840,–
AW-1/PE, hot-dip galvanized	B	688,–	182,–	870,–
AW-2/PE, painted	B	721,–	182,–	903,–
Drum Support FA 60-1, hot-dip galvanized	B	109,–	15,–	124,–
Drum Support FA 60-2, hot-dip galvanized	B	118,–	18,–	136,–
Drum Support FA 60-3, hot-dip galvanized	B	138,–	21,–	159,–
Drum Support FA 200-1, hot-dip galvanized	B	118,–	15,–	133,–
Can Shelf Type GR-A, galvanized	B	138,–	70,–	208,–
Can Shelf Type GR-B, galvanized	B	138,–	70,–	208,–
Can Shelf Type GR-C, galvanized	B	138,–	70,–	208,–
AW-2/PE, hot-dip galvanized	B	757,–	182,–	939,–
Drum Support FA 60-1, hot-dip galvanized	B	109,–	15,–	124,–
Drum Support FA 60-2, hot-dip galvanized	B	118,–	18,–	136,–
Drum Support FA 60-3, hot-dip galvanized	B	138,–	21,–	159,–
Drum Support FA 200-1, hot-dip galvanized	B	118,–	15,–	133,–
Can Shelf Type GR-A, galvanized	B	138,–	70,–	208,–
Can Shelf Type GR-B, galvanized	B	138,–	70,–	208,–
Can Shelf Type GR-C, galvanized	B	138,–	70,–	208,–

Prices in EUR, valid EXW DE-46354 Südlohn, DE-38820 Halberstadt, unpacked
Freight charges valid CPT Norway, islands and oversea territories excluded

BAUER GmbH
Eichendorffstr. 62
46354 Südlohn, Germany

Tel. +49 2862 70 90
info@bauer-suedlohn.com
www.bauer-suedlohn.com

Geschäftsführer
Patrick Bauer, Pascal Bauer
Amtsgericht Coesfeld HRB 5259

TÜVNORD
TÜV NORD CERT GmbH
DIN EN ISO 9001
tuev-nord.de

Price List 0726 en-NO
Environment / Storage

Sump Tray Type AW/PE	Category	Price	Freight charges	Price including freight charges
AW-4/A/PE, painted	B	818,–	266,–	1084,–
Drum Support FA 60-1, hot-dip galvanized	B	109,–	15,–	124,–
Drum Support FA 60-2, hot-dip galvanized	B	118,–	18,–	136,–
Drum Support FA 60-3, hot-dip galvanized	B	138,–	21,–	159,–
Drum Support FA 200-1, hot-dip galvanized	B	118,–	15,–	133,–
Drum Support FA 200-2, hot-dip galvanized	B	138,–	22,–	160,–
Can Shelf Type GR-A, galvanized	B	138,–	70,–	208,–
Can Shelf Type GR-B, galvanized	B	138,–	70,–	208,–
Can Shelf Type GR-C, galvanized	B	138,–	70,–	208,–
AW-4/A/PE, hot-dip galvanized	B	859,–	266,–	1125,–
Drum Support FA 60-1, hot-dip galvanized	B	109,–	15,–	124,–
Drum Support FA 60-2, hot-dip galvanized	B	118,–	18,–	136,–
Drum Support FA 60-3, hot-dip galvanized	B	138,–	21,–	159,–
Drum Support FA 200-1, hot-dip galvanized	B	118,–	15,–	133,–
Drum Support FA 200-2, hot-dip galvanized	B	138,–	22,–	160,–
Can Shelf Type GR-A, galvanized	B	138,–	70,–	208,–
Can Shelf Type GR-B, galvanized	B	138,–	70,–	208,–
Can Shelf Type GR-C, galvanized	B	138,–	70,–	208,–
AW-4/B/PE, painted	B	1021,–	320,–	1341,–
Drum Support FA 60-1, hot-dip galvanized	B	109,–	15,–	124,–
Drum Support FA 60-2, hot-dip galvanized	B	118,–	18,–	136,–
Drum Support FA 60-3, hot-dip galvanized	B	138,–	21,–	159,–
Can Shelf Type GR-A, galvanized	B	138,–	70,–	208,–
Can Shelf Type GR-B, galvanized	B	138,–	70,–	208,–
Can Shelf Type GR-C, galvanized	B	138,–	70,–	208,–
AW-4/B/PE, hot-dip galvanized	B	1096,–	320,–	1416,–
Drum Support FA 60-1, hot-dip galvanized	B	109,–	15,–	124,–
Drum Support FA 60-2, hot-dip galvanized	B	118,–	18,–	136,–
Drum Support FA 60-3, hot-dip galvanized	B	138,–	21,–	159,–
Can Shelf Type GR-A, galvanized	B	138,–	70,–	208,–
Can Shelf Type GR-B, galvanized	B	138,–	70,–	208,–
Can Shelf Type GR-C, galvanized	B	138,–	70,–	208,–
AW 1000/PE, painted	B	1386,–	400,–	1786,–
AW 1000/PE, hot-dip galvanized	B	1575,–	400,–	1975,–
AW 1000-2/PE, painted	B	1700,–	453,–	2153,–
AW 1000-2/PE, hot-dip galvanized	B	1818,–	453,–	2271,–

Sump Trays AW 8-12	Category	Price	Freight charges	Price including freight charges
AW-8, painted	B	732,–	320,–	1052,–
AW-8, hot-dip galvanized	B	815,–	453,–	1268,–
AW-10, painted	B	904,–	453,–	1357,–
AW-10, hot-dip galvanized	B	1239,–	453,–	1692,–
AW-12, painted	B	1035,–	453,–	1488,–
AW-12, hot-dip galvanized	B	1431,–	453,–	1884,–

Prices in EUR, valid EXW DE-46354 Südlohn, DE-38820 Halberstadt, unpacked
Freight charges valid CPT Norway, islands and oversea territories excluded

BAUER GmbH
Eichendorffstr. 62
46354 Südlohn, Germany

Tel. +49 2862 70 90
info@bauer-suedlohn.com
www.bauer-suedlohn.com

Geschäftsführer
Patrick Bauer, Pascal Bauer
Amtsgericht Coesfeld HRB 5259

TÜVNORD
TÜV NORD CERT GmbH
DIN EN ISO 9001
tuev-nord.de

Price List 0726 en-NO
Environment / Storage

Sump Tray Type AWA	Category	Price	Freight charges	Price including freight charges
AWA 1000, painted	B	864,–	266,–	1130,–
AWA 1000, hot-dip galvanized	B	1045,–	400,–	1445,–
AWA 1000-2, painted	B	1239,–	453,–	1692,–
AWA 1000-2, hot-dip galvanized	B	1374,–	453,–	1827,–
AWA 1000-3, painted	B	2254,–	557,–	2811,–
AWA 1000-3, hot-dip galvanized	B	2385,–	735,–	3120,–
AWA 21, painted	B	1048,–	453,–	1501,–
AWA 21, hot-dip galvanized	B	1182,–	453,–	1635,–
AWA 31, painted	B	1956,–	557,–	2513,–
AWA 31, hot-dip galvanized	B	2077,–	557,–	2634,–
AWA 32, painted	B	2127,–	557,–	2684,–
AWA 32, hot-dip galvanized	B	2250,–	557,–	2807,–

Sump Tray Type AWA/SW	Category	Price	Freight charges	Price including freight charges
AWA 1000/SW, painted	B	1064,–	400,–	1464,–
AWA 1000/SW, hot-dip galvanized	B	1246,–	400,–	1646,–
AWA 1000-2/SW, painted	B	1472,–	557,–	2029,–
AWA 1000-2/SW, hot-dip galvanized	B	1605,–	557,–	2162,–
AWA 1000-3/SW, painted	B	2518,–	on request	on request
AWA 1000-3/SW, hot-dip galvanized	B	2648,–	on request	on request
AWA 21/SW, painted	B	1278,–	557,–	1835,–
AWA 21/SW, hot-dip galvanized	B	1413,–	557,–	1970,–
AWA 31/SW, painted	B	2217,–	on request	on request
AWA 31/SW, hot-dip galvanized	B	2339,–	on request	on request
AWA 32/SW, painted	B	2388,–	on request	on request
AWA 32/SW, hot-dip galvanized	B	2512,–	on request	on request

Sump Tray Type AW-F	Category	Price	Freight charges	Price including freight charges
AW-F 1, painted	B	657,–	182,–	839,–
Fixture and Tension Belt for 1 x 200 Litre Drum	B	48,–	9,–	57,–
AW-F 1, hot-dip galvanized	B	780,–	182,–	962,–
Fixture and Tension Belt for 1 x 200 Litre Drum	B	48,–	9,–	57,–
AW-F 2, painted	B	688,–	182,–	870,–
Fixture and Tension Belt for 2 x 200 Litre Drums	B	48,–	9,–	57,–
AW-F 2, hot-dip galvanized	B	842,–	182,–	1024,–
Fixture and Tension Belt for 2 x 200 Litre Drums	B	48,–	9,–	57,–

Ground Protection Spill Tray Type BSW	Category	Price	Freight charges	Price including freight charges
BSW 21, galvanized	B	449,–	266,–	715,–
Access Ramp AR 21, galvanized	B	166,–	22,–	188,–
Access Corner Piece AE 24, galvanized	B	130,–	10,–	140,–
Cross-Shaped Connector KV 24, galvanized	B	20,–	8,–	28,–
Tray Connecting Strip WV 21, galvanized	B	22,–	8,–	30,–
BSW 22, galvanized	B	590,–	266,–	856,–
Access Ramp AR 21, galvanized	B	166,–	22,–	188,–

Prices in EUR, valid EXW DE-46354 Südlohn, DE-38820 Halberstadt, unpacked
Freight charges valid CPT Norway, islands and oversea territories excluded

BAUER GmbH
Eichendorffstr. 62
46354 Südlohn, Germany

Tel. +49 2862 70 90
info@bauer-suedlohn.com
www.bauer-suedlohn.com

Geschäftsführer
Patrick Bauer, Pascal Bauer
Amtsgericht Coesfeld HRB 5259

TÜVNORD
TÜV NORD CERT GmbH
DIN EN ISO 9001
tuev-nord.de

Price List 0726 en-NO
Environment / Storage

Ground Protection Spill Tray Type BSW	Category	Price	Freight charges	Price including freight charges
Access Ramp AR 22, galvanized	B	211,–	32,–	243,–
Access Corner Piece AE 24, galvanized	B	130,–	10,–	140,–
Cross-Shaped Connector KV 24, galvanized	B	20,–	8,–	28,–
Tray Connecting Strip WV 21, galvanized	B	22,–	8,–	30,–
Tray Connecting Strip WV 22, galvanized	B	24,–	8,–	32,–
BSW 23, galvanized	B	764,–	on request	on request
Access Ramp AR 23, galvanized	B	300,–	235,–	535,–
Access Ramp AR 21, galvanized	B	166,–	22,–	188,–
Access Corner Piece AE 24, galvanized	B	130,–	10,–	140,–
Cross-Shaped Connector KV 24, galvanized	B	20,–	8,–	28,–
Tray Connecting Strip WV 21, galvanized	B	22,–	8,–	30,–
Tray Connecting Strip WV 23, galvanized	B	37,–	9,–	46,–
BSW 24, galvanized	B	1341,–	on request	on request
Access Ramp AR 23, galvanized	B	300,–	235,–	535,–
Access Ramp AR 22, galvanized	B	211,–	32,–	243,–
Access Corner Piece AE 24, galvanized	B	130,–	10,–	140,–
Cross-Shaped Connector KV 24, galvanized	B	20,–	8,–	28,–
Tray Connecting Strip WV 22, galvanized	B	24,–	8,–	32,–
Tray Connecting Strip WV 23, galvanized	B	37,–	9,–	46,–
BSW 121, galvanized	B	199,–	70,–	269,–
Access Ramp AR 121, galvanized	B	163,–	22,–	185,–
Cross-Shaped Connector KV 24, galvanized	B	20,–	8,–	28,–
Tray Connecting Strip WV 121, galvanized	B	21,–	9,–	30,–
BSW 122, galvanized	B	243,–	182,–	425,–
Access Ramp AR 121, galvanized	B	163,–	22,–	185,–
Access Ramp AR 122, galvanized	B	275,–	36,–	311,–
Access Corner Piece AE 124, galvanized	B	261,–	21,–	282,–
Cross-Shaped Connector KV 24, galvanized	B	20,–	8,–	28,–
Tray Connecting Strip WV 121, galvanized	B	21,–	9,–	30,–
Tray Connecting Strip WV 122, galvanized	B	26,–	9,–	35,–
BSW 123, galvanized	B	339,–	182,–	521,–
Access Ramp AR 122, galvanized	B	275,–	36,–	311,–
Access Corner Piece AE 124, galvanized	B	261,–	21,–	282,–
Cross-Shaped Connector KV 24, galvanized	B	20,–	8,–	28,–
Tray Connecting Strip WV 122, galvanized	B	26,–	9,–	35,–
BSW 124, galvanized	B	553,–	266,–	819,–
Access Ramp AR 122, galvanized	B	275,–	36,–	311,–
Access Ramp AR 123, galvanized	B	338,–	266,–	604,–
Access Corner Piece AE 124, galvanized	B	261,–	21,–	282,–
Cross-Shaped Connector KV 24, galvanized	B	20,–	8,–	28,–
Tray Connecting Strip WV 122, galvanized	B	26,–	9,–	35,–
Tray Connecting Strip WV 123, galvanized	B	36,–	9,–	45,–
BSW 125, galvanized	B	426,–	320,–	746,–
Access Ramp AR 121, galvanized	B	163,–	22,–	185,–
Access Ramp AR 124, galvanized	B	392,–	320,–	712,–
Access Corner Piece AE 124, galvanized	B	261,–	21,–	282,–

Prices in EUR, valid EXW DE-46354 Südlohn, DE-38820 Halberstadt, unpacked
Freight charges valid CPT Norway, islands and oversea territories excluded

BAUER GmbH
Eichendorffstr. 62
46354 Südlohn, Germany

Tel. +49 2862 70 90
info@bauer-suedlohn.com
www.bauer-suedlohn.com

Geschäftsführer
Patrick Bauer, Pascal Bauer
Amtsgericht Coesfeld HRB 5259

TÜVNORD
TÜV NORD CERT GmbH
DIN EN ISO 9001
tuev-nord.de

Price List 0726 en-NO
Environment / Storage

Ground Protection Spill Tray Type BSW	Category	Price	Freight charges	Price including freight charges
Cross-Shaped Connector KV 24, galvanized	B	20,–	8,–	28,–
Tray Connecting Strip WV 121, galvanized	B	21,–	9,–	30,–
Tray Connecting Strip WV 124, galvanized	B	49,–	9,–	58,–
BSW 126, galvanized	B	668,–	453,–	1121,–
Access Ramp AR 122, galvanized	B	275,–	36,–	311,–
Access Ramp AR 124, galvanized	B	392,–	320,–	712,–
Access Corner Piece AE 124, galvanized	B	261,–	21,–	282,–
Cross-Shaped Connector KV 24, galvanized	B	20,–	8,–	28,–
Tray Connecting Strip WV 122, galvanized	B	26,–	9,–	35,–
Tray Connecting Strip WV 124, galvanized	B	49,–	9,–	58,–

Polyethylene Bunded Spill Flooring Type BWP-PE	Category	Price	Freight charges	Price including freight charges
BWP-PE 150, made of robust polyethylene	B	316,–	182,–	498,–
Ramp Type BWR, robust polyethylene, black	B	222,–	12,–	234,–
Joining Element BWV 2, stainless steel 1.4301	B	29,–	9,–	38,–
BWP-PE 300, made of robust polyethylene	B	641,–	182,–	823,–
Ramp Type BWR, robust polyethylene, black	B	222,–	12,–	234,–
Joining Element BWV 4, stainless steel 1.4301	B	38,–	10,–	48,–

Polyethylene Bunded Spill Flooring Type BWPS-PE	Category	Price	Freight charges	Price including freight charges
BWPS-PE 300, made of robust polyethylene	B	786,–	235,–	1021,–
Ramp Type BWR, robust polyethylene, black	B	222,–	12,–	234,–
Joining Element BWV 2, stainless steel 1.4301	B	29,–	9,–	38,–

Shelf Container Type CEH	Category	Price	Freight charges	Price including freight charges
CEH 29-2, painted	C	9142,–	on request	on request
CEH 29-2 IBC, painted	C	10076,–	on request	on request
CEH 36-2 IBC, painted	C	11727,–	on request	on request
CEH 38-2, painted	C	11719,–	on request	on request
CEH 59-2, painted	C	17352,–	on request	on request
CEH 59-2 IBC, painted	C	18629,–	on request	on request
CEH 75-2 IBC, painted	C	22081,–	on request	on request
CEH 81-2, painted	C	22524,–	on request	on request

Shelf Container Type CEN	Category	Price	Freight charges	Price including freight charges
CEN 29-2, painted	C	7714,–	on request	on request
Potential equalisation	C	184,–	0,–	184,–
CEN 29-2 IBC, painted	C	8421,–	on request	on request
Potential equalisation	C	184,–	0,–	184,–
CEN 29-2b, painted	C	13445,–	on request	on request
Potential equalisation	C	366,–	0,–	366,–
CEN 29-2b IBC, painted	C	14379,–	on request	on request
Potential equalisation	C	366,–	0,–	366,–
CEN 29-3, painted	C	12140,–	on request	on request
Potential equalisation	C	274,–	0,–	274,–

Prices in EUR, valid EXW DE-46354 Südlohn, DE-38820 Halberstadt, unpacked
Freight charges valid CPT Norway, islands and oversea territories excluded

BAUER GmbH
Eichendorffstr. 62
46354 Südlohn, Germany

Tel. +49 2862 70 90
info@bauer-suedlohn.com
www.bauer-suedlohn.com

Geschäftsführer
Patrick Bauer, Pascal Bauer
Amtsgericht Coesfeld HRB 5259

TÜVNORD
TÜV NORD CERT GmbH
DIN EN ISO 9001
tuev-nord.de

Price List 0726 en-NO
Environment / Storage

Shelf Container Type CEN	Category	Price	Freight charges	Price including freight charges
CEN 29-3 IBC, painted	C	12917,–	on request	on request
Potential equalisation	C	274,–	0,–	274,–
CEN 29-3b, painted	C	19757,–	on request	on request
Potential equalisation	C	546,–	0,–	546,–
CEN 29-3b IBC, painted	C	20862,–	on request	on request
Potential equalisation	C	546,–	0,–	546,–
CEN 33-2 IBC, painted	C	9393,–	on request	on request
Potential equalisation	C	184,–	0,–	184,–
CEN 33-2b IBC, painted	C	15740,–	on request	on request
Potential equalisation	C	366,–	0,–	366,–
CEN 33-3 IBC, painted	C	13849,–	on request	on request
Potential equalisation	C	274,–	0,–	274,–
CEN 33-3b IBC, painted	C	22018,–	on request	on request
Potential equalisation	C	546,–	0,–	546,–
CEN 36-2, painted	C	9470,–	on request	on request
Potential equalisation	C	184,–	0,–	184,–
CEN 36-2b, painted	C	16110,–	on request	on request
Potential equalisation	C	366,–	0,–	366,–
CEN 36-3, painted	C	14046,–	on request	on request
Potential equalisation	C	274,–	0,–	274,–
CEN 36-3b, painted	C	22693,–	on request	on request
Potential equalisation	C	546,–	0,–	546,–
CEN 59-2, painted	C	12772,–	on request	on request
Potential equalisation	C	365,–	0,–	365,–
CEN 59-2 IBC, painted	C	13917,–	on request	on request
Potential equalisation	C	365,–	0,–	365,–
CEN 59-2b, painted	C	21982,–	on request	on request
Potential equalisation	C	729,–	0,–	729,–
CEN 59-2b IBC, painted	C	22754,–	on request	on request
Potential equalisation	C	729,–	0,–	729,–
CEN 59-3, painted	C	19663,–	on request	on request
Potential equalisation	C	545,–	0,–	545,–
CEN 59-3 IBC, painted	C	20812,–	on request	on request
Potential equalisation	C	545,–	0,–	545,–
CEN 59-3b, painted	C	31741,–	on request	on request
Potential equalisation	C	1089,–	0,–	1089,–
CEN 59-3b IBC, painted	C	33404,–	on request	on request
Potential equalisation	C	1089,–	0,–	1089,–
CEN 65-2 IBC, painted	C	15002,–	on request	on request
Potential equalisation	C	365,–	0,–	365,–
CEN 65-2b IBC, painted	C	25299,–	on request	on request
Potential equalisation	C	729,–	0,–	729,–
CEN 65-3 IBC, painted	C	21999,–	on request	on request
Potential equalisation	C	545,–	0,–	545,–
CEN 65-3b IBC, painted	C	35919,–	on request	on request
Potential equalisation	C	1089,–	0,–	1089,–

Prices in EUR, valid EXW DE-46354 Südlohn, DE-38820 Halberstadt, unpacked
Freight charges valid CPT Norway, islands and oversea territories excluded

BAUER GmbH
Eichendorffstr. 62
46354 Südlohn, Germany

Tel. +49 2862 70 90
info@bauer-suedlohn.com
www.bauer-suedlohn.com

Geschäftsführer
Patrick Bauer, Pascal Bauer
Amtsgericht Coesfeld HRB 5259

TÜVNORD
TÜV NORD CERT GmbH
DIN EN ISO 9001
tuev-nord.de

Price List 0726 en-NO
Environment / Storage

Shelf Container Type CEN	Category	Price	Freight charges	Price including freight charges
CEN 75-2, painted	C	16004,–	on request	on request
Potential equalisation	C	365,–	0,–	365,–
CEN 75-2b, painted	C	26485,–	on request	on request
Potential equalisation	C	729,–	0,–	729,–
CEN 75-3, painted	C	23086,–	on request	on request
Potential equalisation	C	545,–	0,–	545,–
CEN 75-3b, painted	C	37480,–	on request	on request
Potential equalisation	C	1089,–	0,–	1089,–
CEN 81-2, painted	C	16788,–	on request	on request
Potential equalisation	C	365,–	0,–	365,–
CEN 81-2b, painted	C	27692,–	on request	on request
Potential equalisation	C	729,–	0,–	729,–
CEN 81-3, painted	C	24174,–	on request	on request
Potential equalisation	C	545,–	0,–	545,–
CEN 81-3b, painted	C	39119,–	on request	on request
Potential equalisation	C	1089,–	0,–	1089,–

Sump Tray for Skips Type CW	Category	Price	Freight charges	Price including freight charges
CW 1, painted	B	2952,–	on request	on request
CW 2, painted	B	3226,–	on request	on request
CW 3, painted	B	3722,–	on request	on request

Sump Tray Type ECO	Category	Price	Freight charges	Price including freight charges
ECO 1/200, painted	B	246,–	182,–	428,–
ECO 1/200, hot-dip galvanized	B	256,–	182,–	438,–
ECO 2/200, painted	B	261,–	182,–	443,–
ECO 2/200, hot-dip galvanized	B	270,–	182,–	452,–
ECO 4/200, painted	B	285,–	182,–	467,–
ECO 4/200, hot-dip galvanized	B	297,–	182,–	479,–
ECO 4/400, painted	B	354,–	182,–	536,–
ECO 4/400, hot-dip galvanized	B	370,–	182,–	552,–
ECO 1/1000, painted	B	632,–	266,–	898,–
ECO 1/1000, hot-dip galvanized	B	759,–	266,–	1025,–
ECO 2/1000, painted	B	826,–	320,–	1146,–
ECO 2/1000, hot-dip galvanized	B	915,–	320,–	1235,–

Sump Tray Type ECO-A	Category	Price	Freight charges	Price including freight charges
ECO-A 1/1000, painted	B	831,–	266,–	1097,–
ECO-A 1/1000, hot-dip galvanized	B	971,–	266,–	1237,–
ECO-A 2/1000, painted	B	1221,–	453,–	1674,–
ECO-A 2/1000, hot-dip galvanized	B	1341,–	453,–	1794,–

Sump Tray Type ECO-S	Category	Price	Freight charges	Price including freight charges
ECO-S 2/200, hot-dip galvanized	B	3447,–	735,–	4182,–
ECO-S 4/200, hot-dip galvanized	B	4053,–	1110,–	5163,–

Prices in EUR, valid EXW DE-46354 Südlohn, DE-38820 Halberstadt, unpacked
Freight charges valid CPT Norway, islands and oversea territories excluded

BAUER GmbH
Eichendorffstr. 62
46354 Südlohn, Germany

Tel. +49 2862 70 90
info@bauer-suedlohn.com
www.bauer-suedlohn.com

Geschäftsführer
Patrick Bauer, Pascal Bauer
Amtsgericht Coesfeld HRB 5259

TÜVNORD
TÜV NORD CERT GmbH
DIN EN ISO 9001
tuev-nord.de

Price List 0726 en-NO
Environment / Storage

Sump Tray Type ECO-S	Category	Price	Freight charges	Price including freight charges
ECO-S 4/400, hot-dip galvanized	B	5000,–	1110,–	6110,–

Suspended Sump with Polyethylene Inlay Type EHW PE	Category	Price	Freight charges	Price including freight charges
EHW 1800 PE, painted	B	909,–	266,–	1175,–
EHW 1800 PE, hot-dip galvanized	B	922,–	266,–	1188,–
EHW 2200 PE, painted	B	987,–	266,–	1253,–
EHW 2200 PE, hot-dip galvanized	B	1028,–	266,–	1294,–
EHW 2700 PE, painted	B	1144,–	453,–	1597,–
EHW 2700 PE, hot-dip galvanized	B	1211,–	453,–	1664,–
EHW 3300 PE, painted	B	1653,–	453,–	2106,–
EHW 3300 PE, hot-dip galvanized	B	1727,–	453,–	2180,–

Suspended Sump Type EHW	Category	Price	Freight charges	Price including freight charges
EHW 1800, painted	B	509,–	266,–	775,–
EHW 1800, hot-dip galvanized	B	521,–	266,–	787,–
EHW 2200, painted	B	564,–	266,–	830,–
EHW 2200, hot-dip galvanized	B	605,–	266,–	871,–
EHW 2700, painted	B	648,–	320,–	968,–
EHW 2700, hot-dip galvanized	B	717,–	320,–	1037,–
EHW 3300, painted	B	1002,–	453,–	1455,–
EHW 3300, hot-dip galvanized	B	1076,–	453,–	1529,–
EHW 3600, painted	B	1050,–	453,–	1503,–
EHW 3600, hot-dip galvanized	B	1131,–	453,–	1584,–

Drum Pallet Type FP	Category	Price	Freight charges	Price including freight charges
FP 2, hot-dip galvanized	B	92,–	182,–	274,–

Drum Shelve Type FR	Category	Price	Freight charges	Price including freight charges
FR-1, hot-dip galvanized	B	293,–	182,–	475,–
Can Stand Type GS, hot-dip galvanized	B	65,–	18,–	83,–
Clip-on Rotating Support, galvanized	B	85,–	10,–	95,–
FR-2, hot-dip galvanized	B	375,–	182,–	557,–
Can Stand Type GS, hot-dip galvanized	B	65,–	18,–	83,–
Clip-on Rotating Support, galvanized	B	85,–	10,–	95,–
FR-3, hot-dip galvanized	B	419,–	182,–	601,–
Can Stand Type GS, hot-dip galvanized	B	65,–	18,–	83,–
Rotating Support RA 60, hot-dip galvanized	B	97,–	9,–	106,–

Sump Tray Type FRA	Category	Price	Freight charges	Price including freight charges
FRA-1, painted	B	310,–	182,–	492,–
Grid, hot-dip galvanized	B	67,–	16,–	83,–
FRA-1, hot-dip galvanized	B	367,–	182,–	549,–
Grid, hot-dip galvanized	B	67,–	16,–	83,–
FRA-2, painted	B	322,–	182,–	504,–
Grid, hot-dip galvanized	B	132,–	24,–	156,–

Prices in EUR, valid EXW DE-46354 Südlohn, DE-38820 Halberstadt, unpacked
Freight charges valid CPT Norway, islands and oversea territories excluded

BAUER GmbH
Eichendorffstr. 62
46354 Südlohn, Germany

Tel. +49 2862 70 90
info@bauer-suedlohn.com
www.bauer-suedlohn.com

Geschäftsführer
Patrick Bauer, Pascal Bauer
Amtsgericht Coesfeld HRB 5259

TÜVNORD
TÜV NORD CERT GmbH
DIN EN ISO 9001
tuev-nord.de

Price List 0726 en-NO
Environment / Storage

Sump Tray Type FRA	Category	Price	Freight charges	Price including freight charges
FRA-2, hot-dip galvanized	B	378,–	182,–	560,–
Grid, hot-dip galvanized	B	132,–	24,–	156,–
FRA-3, painted	B	322,–	182,–	504,–
Grid, hot-dip galvanized	B	132,–	24,–	156,–
FRA-3, hot-dip galvanized	B	378,–	182,–	560,–
Grid, hot-dip galvanized	B	132,–	24,–	156,–

Drum Shelf Type FRE/M	Category	Price	Freight charges	Price including freight charges
FRE-1/M, hot-dip galvanized	B	225,–	21,–	246,–
Clip-on Rotating Support, galvanized	B	85,–	10,–	95,–
Can Stand Type GS, hot-dip galvanized	B	65,–	18,–	83,–
FRE-2/M, hot-dip galvanized	B	261,–	22,–	283,–
Clip-on Rotating Support, galvanized	B	85,–	10,–	95,–
Can Stand Type GS, hot-dip galvanized	B	65,–	18,–	83,–
FRE-3/M, hot-dip galvanized	B	279,–	27,–	306,–
Rotating Support RA 60, hot-dip galvanized	B	97,–	9,–	106,–
Can Stand Type GS, hot-dip galvanized	B	65,–	18,–	83,–

Can Shelf Type FRE-G/M	Category	Price	Freight charges	Price including freight charges
FRE-G1/M, hot-dip galvanized	B	236,–	27,–	263,–
FRE-G2/M, hot-dip galvanized	B	274,–	32,–	306,–

Can Shelf for Small Cans Type FRG	Category	Price	Freight charges	Price including freight charges
FRG, hot-dip galvanized	B	381,–	182,–	563,–

Drum Stacking Pallet Type FSP-D	Category	Price	Freight charges	Price including freight charges
FSP-1 D, lackiert	B	845,–	266,–	1111,–
FSP-1 D, hot-dip galvanized	B	1106,–	266,–	1372,–
FSP-2 D, lackiert	B	901,–	266,–	1167,–
FSP-2 D, hot-dip galvanized	B	1222,–	266,–	1488,–
FSP-4 D, lackiert	B	1170,–	266,–	1436,–
FSP-4 D, hot-dip galvanized	B	1615,–	266,–	1881,–

Drum Stacking Pallet Type FSP-G	Category	Price	Freight charges	Price including freight charges
FSP-1 G, lackiert	B	821,–	266,–	1087,–
FSP-1 G, hot-dip galvanized	B	1089,–	266,–	1355,–
FSP-2 G, painted	B	879,–	266,–	1145,–
FSP-2 G, hot-dip galvanized	B	1197,–	266,–	1463,–
FSP-4 G, painted	B	1148,–	400,–	1548,–
FSP-4 G, hot-dip galvanized	B	1587,–	400,–	1987,–

Drum Stacking Pallet Type FSP	Category	Price	Freight charges	Price including freight charges
FSP-1, painted	B	484,–	182,–	666,–
FSP-1, hot-dip galvanized	B	727,–	266,–	993,–
FSP-2, painted	B	655,–	266,–	921,–

Prices in EUR, valid EXW DE-46354 Südlohn, DE-38820 Halberstadt, unpacked
Freight charges valid CPT Norway, islands and oversea territories excluded

BAUER GmbH
Eichendorffstr. 62
46354 Südlohn, Germany

Tel. +49 2862 70 90
info@bauer-suedlohn.com
www.bauer-suedlohn.com

Geschäftsführer
Patrick Bauer, Pascal Bauer
Amtsgericht Coesfeld HRB 5259

TÜVNORD
TÜV NORD CERT GmbH
DIN EN ISO 9001
tuev-nord.de

Price List 0726 en-NO
Environment / Storage

Drum Stacking Pallet Type FSP	Category	Price	Freight charges	Price including freight charges
FSP-2, hot-dip galvanized	B	913,–	266,–	1179,–
FSP-4, painted	B	746,–	266,–	1012,–
FSP-4, hot-dip galvanized	B	1151,–	266,–	1417,–

Hazardous Materials Depot Type GD-A	Category	Price	Freight charges	Price including freight charges
GD-A, painted	C	762,–	266,–	1028,–
Drum Support FA 60-1, hot-dip galvanized	B	109,–	15,–	124,–
Drum Support FA 60-2, hot-dip galvanized	B	118,–	18,–	136,–
Drum Support FA 60-3, hot-dip galvanized	B	138,–	21,–	159,–
Can Shelf Type GR-A, galvanized	B	138,–	70,–	208,–
Can Shelf Type GR-B, galvanized	B	138,–	70,–	208,–
Can Shelf Type GR-C, galvanized	B	138,–	70,–	208,–
GD-A, hot-dip galvanized	C	960,–	266,–	1226,–
Drum Support FA 60-1, hot-dip galvanized	B	109,–	15,–	124,–
Drum Support FA 60-2, hot-dip galvanized	B	118,–	18,–	136,–
Drum Support FA 60-3, hot-dip galvanized	B	138,–	21,–	159,–
Can Shelf Type GR-A, galvanized	B	138,–	70,–	208,–
Can Shelf Type GR-B, galvanized	B	138,–	70,–	208,–
Can Shelf Type GR-C, galvanized	B	138,–	70,–	208,–

Hazardous Materials Depot Type GD-B	Category	Price	Freight charges	Price including freight charges
GD-B, painted	C	1363,–	266,–	1629,–
Drum Support FA 60-1, hot-dip galvanized	B	109,–	15,–	124,–
Drum Support FA 60-2, hot-dip galvanized	B	118,–	18,–	136,–
Drum Support FA 60-3, hot-dip galvanized	B	138,–	21,–	159,–
Can Shelf Type GR-A, galvanized	B	138,–	70,–	208,–
Can Shelf Type GR-B, galvanized	B	138,–	70,–	208,–
Can Shelf Type GR-C, galvanized	B	138,–	70,–	208,–
GD-B, hot-dip galvanized	C	1625,–	266,–	1891,–
Drum Support FA 60-1, hot-dip galvanized	B	109,–	15,–	124,–
Drum Support FA 60-2, hot-dip galvanized	B	118,–	18,–	136,–
Drum Support FA 60-3, hot-dip galvanized	B	138,–	21,–	159,–
Can Shelf Type GR-A, galvanized	B	138,–	70,–	208,–
Can Shelf Type GR-B, galvanized	B	138,–	70,–	208,–
Can Shelf Type GR-C, galvanized	B	138,–	70,–	208,–

Hazardous Materials Depot Type GD-C	Category	Price	Freight charges	Price including freight charges
GD-C, painted	C	1163,–	266,–	1429,–
Drum Support FA 60-1, hot-dip galvanized	B	109,–	15,–	124,–
Drum Support FA 60-2, hot-dip galvanized	B	118,–	18,–	136,–
Drum Support FA 60-3, hot-dip galvanized	B	138,–	21,–	159,–
Can Shelf Type GR-A, galvanized	B	138,–	70,–	208,–
Can Shelf Type GR-B, galvanized	B	138,–	70,–	208,–
Can Shelf Type GR-C, galvanized	B	138,–	70,–	208,–
GD-C, hot-dip galvanized	C	1314,–	266,–	1580,–

Prices in EUR, valid EXW DE-46354 Südlohn, DE-38820 Halberstadt, unpacked
Freight charges valid CPT Norway, islands and oversea territories excluded

BAUER GmbH
Eichendorffstr. 62
46354 Südlohn, Germany

Tel. +49 2862 70 90
info@bauer-suedlohn.com
www.bauer-suedlohn.com

Geschäftsführer
Patrick Bauer, Pascal Bauer
Amtsgericht Coesfeld HRB 5259

TÜVNORD
TÜV NORD CERT GmbH
DIN EN ISO 9001
tuev-nord.de

Price List 0726 en-NO
Environment / Storage

Hazardous Materials Depot Type GD-C	Category	Price	Freight charges	Price including freight charges
Drum Support FA 60-1, hot-dip galvanized	B	109,–	15,–	124,–
Drum Support FA 60-2, hot-dip galvanized	B	118,–	18,–	136,–
Drum Support FA 60-3, hot-dip galvanized	B	138,–	21,–	159,–
Can Shelf Type GR-A, galvanized	B	138,–	70,–	208,–
Can Shelf Type GR-B, galvanized	B	138,–	70,–	208,–
Can Shelf Type GR-C, galvanized	B	138,–	70,–	208,–

Hazardous Materials Depot Type GD-E	Category	Price	Freight charges	Price including freight charges
GD-E 2, galvanized	C	1562,–	400,–	1962,–
Drum Support FA 60-1, hot-dip galvanized	B	109,–	15,–	124,–
Drum Support FA 60-2, hot-dip galvanized	B	118,–	18,–	136,–
Drum Support FA 60-3, hot-dip galvanized	B	138,–	21,–	159,–
Can Shelf Type GR-A, galvanized	B	138,–	70,–	208,–
Can Shelf Type GR-B, galvanized	B	138,–	70,–	208,–
Can Shelf Type GR-C, galvanized	B	138,–	70,–	208,–
GD-E 4, galvanized	C	1907,–	504,–	2411,–
Drum Support FA 60-1, hot-dip galvanized	B	109,–	15,–	124,–
Drum Support FA 60-2, hot-dip galvanized	B	118,–	18,–	136,–
Drum Support FA 60-3, hot-dip galvanized	B	138,–	21,–	159,–
Can Shelf Type GR-A, galvanized	B	138,–	70,–	208,–
Can Shelf Type GR-B, galvanized	B	138,–	70,–	208,–
Can Shelf Type GR-C, galvanized	B	138,–	70,–	208,–

Hazardous Materials Depot Type GD-E/IBC	Category	Price	Freight charges	Price including freight charges
GD-E/IBC, galvanized	C	2367,–	1375,–	3742,–
GD-E/IBC-2, galvanized	C	3552,–	453,–	4005,–

Hazardous Materials Depot Type GD-N	Category	Price	Freight charges	Price including freight charges
GD-N 2, galvanized	C	1362,–	400,–	1762,–
Intermediate Storage Level, hot-dip galvanized	C	106,–	18,–	124,–
Drum Support FA 60-1, hot-dip galvanized	B	109,–	15,–	124,–
Can Shelf Type GR-A, galvanized	B	138,–	70,–	208,–
Can Shelf Type GR-B, galvanized	B	138,–	70,–	208,–
Can Shelf Type GR-C, galvanized	B	138,–	70,–	208,–
GD-N 4, galvanized	C	1697,–	400,–	2097,–
Intermediate Storage Level, hot-dip galvanized	C	106,–	18,–	124,–
Drum Support FA 60-1, hot-dip galvanized	B	109,–	15,–	124,–
Drum Support FA 60-2, hot-dip galvanized	B	118,–	18,–	136,–
Drum Support FA 200-1, hot-dip galvanized	B	118,–	15,–	133,–
Drum Support FA 200-2, hot-dip galvanized	B	138,–	22,–	160,–
Can Shelf Type GR-A, galvanized	B	138,–	70,–	208,–
Can Shelf Type GR-B, galvanized	B	138,–	70,–	208,–
Can Shelf Type GR-C, galvanized	B	138,–	70,–	208,–

Prices in EUR, valid EXW DE-46354 Südlohn, DE-38820 Halberstadt, unpacked
Freight charges valid CPT Norway, islands and oversea territories excluded

BAUER GmbH
Eichendorffstr. 62
46354 Südlohn, Germany

Tel. +49 2862 70 90
info@bauer-suedlohn.com
www.bauer-suedlohn.com

Geschäftsführer
Patrick Bauer, Pascal Bauer
Amtsgericht Coesfeld HRB 5259

TÜVNORD
TÜV NORD CERT GmbH
DIN EN ISO 9001
tuev-nord.de

Price List 0726 en-NO
Environment / Storage

Hazardous Materials DepotType GD-N/R	Category	Price	Freight charges	Price including freight charges
GD-N/R 2, galvanized	C	1562,–	400,–	1962,–
Intermediate Storage Level, hot-dip galvanized	C	106,–	18,–	124,–
Drum Support FA 60-1, hot-dip galvanized	B	109,–	15,–	124,–
Can Shelf Type GR-A, galvanized	B	138,–	70,–	208,–
Can Shelf Type GR-B, galvanized	B	138,–	70,–	208,–
Can Shelf Type GR-C, galvanized	B	138,–	70,–	208,–
GD-N/R 4, galvanized	C	1901,–	400,–	2301,–
Intermediate Storage Level, hot-dip galvanized	C	106,–	18,–	124,–
Drum Support FA 60-1, hot-dip galvanized	B	109,–	15,–	124,–
Drum Support FA 60-2, hot-dip galvanized	B	118,–	18,–	136,–
Drum Support FA 200-1, hot-dip galvanized	B	118,–	15,–	133,–
Drum Support FA 200-2, hot-dip galvanized	B	138,–	22,–	160,–
Can Shelf Type GR-A, galvanized	B	138,–	70,–	208,–
Can Shelf Type GR-B, galvanized	B	138,–	70,–	208,–
Can Shelf Type GR-C, galvanized	B	138,–	70,–	208,–

Gas Cylinder Containers Type GFC-B	Category	Price	Freight charges	Price including freight charges
GFC-B M0, painted	B	3406,–	1375,–	4781,–
Fixture with Safety Chain to Secure Gas Cylinders, hot-dip galvanized	B	72,–	12,–	84,–
Rack for Gas Cylinders GFG-2, galvanized	B	204,–	182,–	386,–
GFC-B M1, painted	B	3949,–	1625,–	5574,–
Fixture with Safety Chain to Secure Gas Cylinders, hot-dip galvanized	B	72,–	12,–	84,–
Rack for Gas Cylinders GFG-2, galvanized	B	204,–	182,–	386,–
GFC-B M2, painted	B	4114,–	1625,–	5739,–
Fixture with Safety Chain to Secure Gas Cylinders, hot-dip galvanized	B	72,–	12,–	84,–
Rack for Gas Cylinders GFG-2, galvanized	B	204,–	182,–	386,–
GFC-B M3, painted	B	4761,–	1625,–	6386,–
Fixture with Safety Chain to Secure Gas Cylinders, hot-dip galvanized	B	72,–	12,–	84,–
Rack for Gas Cylinders GFG-2, galvanized	B	204,–	182,–	386,–
GFC-B M4, painted	B	5355,–	1823,–	7178,–
Fixture with Safety Chain to Secure Gas Cylinders, hot-dip galvanized	B	72,–	12,–	84,–
Rack for Gas Cylinders GFG-2, galvanized	B	204,–	182,–	386,–
GFC-B M5, painted	B	7439,–	1823,–	9262,–
Fixture with Safety Chain to Secure Gas Cylinders, hot-dip galvanized	B	72,–	12,–	84,–
Rack for Gas Cylinders GFG-2, galvanized	B	204,–	182,–	386,–

Gas Cylinder Containers Type GFC-B/W	Category	Price	Freight charges	Price including freight charges
GFC-B/W M1, painted	B	4216,–	1625,–	5841,–
Fixture with Safety Chain to Secure Gas Cylinders, hot-dip galvanized	B	72,–	12,–	84,–
GFC-B/W M2, painted	B	4421,–	1625,–	6046,–
Fixture with Safety Chain to Secure Gas Cylinders, hot-dip galvanized	B	72,–	12,–	84,–
GFC-B/W M3, painted	B	5076,–	1625,–	6701,–
Fixture with Safety Chain to Secure Gas Cylinders, hot-dip galvanized	B	72,–	12,–	84,–
Rack for Gas Cylinders GFG-2, galvanized	B	204,–	182,–	386,–
GFC-B/W M4, painted	B	5675,–	1823,–	7498,–

Prices in EUR, valid EXW DE-46354 Südlohn, DE-38820 Halberstadt, unpacked
Freight charges valid CPT Norway, islands and oversea territories excluded

BAUER GmbH
Eichendorffstr. 62
46354 Südlohn, Germany

Tel. +49 2862 70 90
info@bauer-suedlohn.com
www.bauer-suedlohn.com

Geschäftsführer
Patrick Bauer, Pascal Bauer
Amtsgericht Coesfeld HRB 5259

TÜVNORD
TÜV NORD CERT GmbH
DIN EN ISO 9001
tuev-nord.de

Gas Cylinder Containers Type GFC-B/W	Category	Price	Freight charges	Price including freight charges
Fixture with Safety Chain to Secure Gas Cylinders, hot-dip galvanized	B	72,–	12,–	84,–
Rack for Gas Cylinders GFG-2, galvanized	B	204,–	182,–	386,–
GFC-B/W M5, painted	B	7844,–	1823,–	9667,–
Fixture with Safety Chain to Secure Gas Cylinders, hot-dip galvanized	B	72,–	12,–	84,–
Rack for Gas Cylinders GFG-2, galvanized	B	204,–	182,–	386,–

Gas Cylinder Containers Type GFC-E/G	Category	Price	Freight charges	Price including freight charges
GFC-E/G M0, hot-dip galvanized	B	1540,–	400,–	1940,–
Fixture with Safety Chain to Secure Gas Cylinders, hot-dip galvanized	B	40,–	12,–	52,–
Rack for Gas Cylinders GFG-2, galvanized	B	204,–	182,–	386,–
Access Ramp Type AR, galvanized	B	163,–	22,–	185,–
GFC-E/G M1, hot-dip galvanized	B	2191,–	1625,–	3816,–
Fixture with Safety Chain to Secure Gas Cylinders, hot-dip galvanized	B	40,–	12,–	52,–
Rack for Gas Cylinders GFG-2, galvanized	B	204,–	182,–	386,–
Access Ramp Type AR, galvanized	B	163,–	22,–	185,–
Central Dividing Wall, galvanized	B	87,–	22,–	109,–
GFC-E/G M2, hot-dip galvanized	B	2401,–	1625,–	4026,–
Fixture with Safety Chain to Secure Gas Cylinders, hot-dip galvanized	B	40,–	12,–	52,–
Rack for Gas Cylinders GFG-2, galvanized	B	204,–	182,–	386,–
Access Ramp Type AR, galvanized	B	163,–	22,–	185,–
Central Dividing Wall, galvanized	B	129,–	32,–	161,–
GFC-E/G M3, hot-dip galvanized	B	2671,–	1625,–	4296,–
Fixture with Safety Chain to Secure Gas Cylinders, hot-dip galvanized	B	40,–	12,–	52,–
Rack for Gas Cylinders GFG-2, galvanized	B	204,–	182,–	386,–
Access Ramp Type AR, galvanized	B	163,–	22,–	185,–
Central Dividing Wall, galvanized	B	129,–	32,–	161,–
GFC-E/G M4, hot-dip galvanized	B	2895,–	1823,–	4718,–
Fixture with Safety Chain to Secure Gas Cylinders, hot-dip galvanized	B	40,–	12,–	52,–
Rack for Gas Cylinders GFG-2, galvanized	B	204,–	182,–	386,–
Access Ramp Type AR, galvanized	B	163,–	22,–	185,–
Central Dividing Wall, galvanized	B	129,–	32,–	161,–
GFC-E/G M5, hot-dip galvanized	B	3587,–	1823,–	5410,–
Fixture with Safety Chain to Secure Gas Cylinders, hot-dip galvanized	B	40,–	12,–	52,–
Rack for Gas Cylinders GFG-2, galvanized	B	204,–	182,–	386,–
Access Ramp Type AR, galvanized	B	163,–	22,–	185,–
Central Dividing Wall, galvanized	B	191,–	40,–	231,–

Gas Cylinder Containers Type GFC-E/T	Category	Price	Freight charges	Price including freight charges
GFC-E/T M0, hot-dip galvanized	B	1560,–	400,–	1960,–
Fixture with Safety Chain to Secure Gas Cylinders, hot-dip galvanized	B	40,–	12,–	52,–
Rack for Gas Cylinders GFG-2, galvanized	B	204,–	182,–	386,–
Access Ramp Type AR, galvanized	B	163,–	22,–	185,–
GFC-E/T M1, hot-dip galvanized	B	2229,–	1625,–	3854,–
Fixture with Safety Chain to Secure Gas Cylinders, hot-dip galvanized	B	40,–	12,–	52,–
Rack for Gas Cylinders GFG-2, galvanized	B	204,–	182,–	386,–

Prices in EUR, valid EXW DE-46354 Südlohn, DE-38820 Halberstadt, unpacked
Freight charges valid CPT Norway, islands and oversea territories excluded

BAUER GmbH
Eichendorffstr. 62
46354 Südlohn, Germany

Tel. +49 2862 70 90
info@bauer-suedlohn.com
www.bauer-suedlohn.com

Geschäftsführer
Patrick Bauer, Pascal Bauer
Amtsgericht Coesfeld HRB 5259

TÜVNORD
TÜV NORD CERT GmbH
DIN EN ISO 9001
tuev-nord.de

Price List 0726 en-NO
Environment / Storage

Gas Cylinder Containers Type GFC-E/T	Category	Price	Freight charges	Price including freight charges
Access Ramp Type AR, galvanized	B	163,–	22,–	185,–
Central Dividing Wall, galvanized	B	87,–	22,–	109,–
GFC-E/T M2, hot-dip galvanized	B	2448,–	1625,–	4073,–
Fixture with Safety Chain to Secure Gas Cylinders, hot-dip galvanized	B	40,–	12,–	52,–
Rack for Gas Cylinders GFG-2, galvanized	B	204,–	182,–	386,–
Access Ramp Type AR, galvanized	B	163,–	22,–	185,–
Central Dividing Wall, galvanized	B	129,–	32,–	161,–
GFC-E/T M3, hot-dip galvanized	B	2737,–	1625,–	4362,–
Fixture with Safety Chain to Secure Gas Cylinders, hot-dip galvanized	B	40,–	12,–	52,–
Rack for Gas Cylinders GFG-2, galvanized	B	204,–	182,–	386,–
Access Ramp Type AR, galvanized	B	163,–	22,–	185,–
Central Dividing Wall, galvanized	B	129,–	32,–	161,–
GFC-E/T M4, hot-dip galvanized	B	2960,–	1823,–	4783,–
Fixture with Safety Chain to Secure Gas Cylinders, hot-dip galvanized	B	40,–	12,–	52,–
Rack for Gas Cylinders GFG-2, galvanized	B	204,–	182,–	386,–
Access Ramp Type AR, galvanized	B	163,–	22,–	185,–
Central Dividing Wall, galvanized	B	129,–	32,–	161,–
GFC-E/T M5, hot-dip galvanized	B	3678,–	1823,–	5501,–
Fixture with Safety Chain to Secure Gas Cylinders, hot-dip galvanized	B	40,–	12,–	52,–
Rack for Gas Cylinders GFG-2, galvanized	B	204,–	182,–	386,–
Access Ramp Type AR, galvanized	B	163,–	22,–	185,–
Central Dividing Wall, galvanized	B	191,–	40,–	231,–

Gas Cylinder Containers Type GFC-M/D	Category	Price	Freight charges	Price including freight charges
GFC-M0/D, hot-dip galvanized	B	1028,–	266,–	1294,–
Grid Floor, hot-dip galvanized	B	152,–	72,–	224,–
Fixture with Safety Chain to Secure Gas Cylinders, hot-dip galvanized	B	40,–	12,–	52,–
Rack for Gas Cylinders GFG-2, galvanized	B	204,–	182,–	386,–
GFC-M1/D, hot-dip galvanized	B	1247,–	400,–	1647,–
Grid Floor, hot-dip galvanized	B	274,–	182,–	456,–
Fixture with Safety Chain to Secure Gas Cylinders, hot-dip galvanized	B	40,–	12,–	52,–
Rack for Gas Cylinders GFG-2, galvanized	B	204,–	182,–	386,–
GFC-M2/D, hot-dip galvanized	B	1327,–	400,–	1727,–
Grid Floor, hot-dip galvanized	B	375,–	182,–	557,–
Fixture with Safety Chain to Secure Gas Cylinders, hot-dip galvanized	B	40,–	12,–	52,–
Rack for Gas Cylinders GFG-2, galvanized	B	204,–	182,–	386,–
GFC-M3/D, hot-dip galvanized	B	1498,–	400,–	1898,–
Grid Floor, hot-dip galvanized	B	510,–	266,–	776,–
Fixture with Safety Chain to Secure Gas Cylinders, hot-dip galvanized	B	40,–	12,–	52,–
Rack for Gas Cylinders GFG-2, galvanized	B	204,–	182,–	386,–
GFC-M4/D, hot-dip galvanized	B	1601,–	400,–	2001,–
Grid Floor, hot-dip galvanized	B	627,–	266,–	893,–
Fixture with Safety Chain to Secure Gas Cylinders, hot-dip galvanized	B	40,–	12,–	52,–
Rack for Gas Cylinders GFG-2, galvanized	B	204,–	182,–	386,–
GFC-M5/D, hot-dip galvanized	B	1903,–	504,–	2407,–
Grid Floor, hot-dip galvanized	B	765,–	266,–	1031,–

Prices in EUR, valid EXW DE-46354 Südlohn, DE-38820 Halberstadt, unpacked
Freight charges valid CPT Norway, islands and oversea territories excluded

BAUER GmbH
Eichendorffstr. 62
46354 Südlohn, Germany

Tel. +49 2862 70 90
info@bauer-suedlohn.com
www.bauer-suedlohn.com

Geschäftsführer
Patrick Bauer, Pascal Bauer
Amtsgericht Coesfeld HRB 5259

TÜVNORD
TÜV NORD CERT GmbH
DIN EN ISO 9001
tuev-nord.de

Price List 0726 en-NO
Environment / Storage

Gas Cylinder Containers Type GFC-M/D	Category	Price	Freight charges	Price including freight charges
Fixture with Safety Chain to Secure Gas Cylinders, hot-dip galvanized	B	40,–	12,–	52,–
Rack for Gas Cylinders GFG-2, galvanized	B	204,–	182,–	386,–
GFC-M6/D-DF, hot-dip galvanized	B	2775,–	683,–	3458,–
Fixture with Safety Chain to Secure Gas Cylinders, hot-dip galvanized	B	40,–	12,–	52,–
Rack for Gas Cylinders GFG-2, galvanized	B	204,–	182,–	386,–

Gas Cylinder Containers Type GFC-M	Category	Price	Freight charges	Price including freight charges
GFC-M1, hot-dip galvanized	B	1101,–	266,–	1367,–
Grid Floor, hot-dip galvanized	B	274,–	182,–	456,–
Fixture with Safety Chain to Secure Gas Cylinders, hot-dip galvanized	B	40,–	12,–	52,–
Rack for Gas Cylinders GFG-2, galvanized	B	204,–	182,–	386,–
GFC-M2, hot-dip galvanized	B	1169,–	400,–	1569,–
Grid Floor, hot-dip galvanized	B	375,–	182,–	557,–
Fixture with Safety Chain to Secure Gas Cylinders, hot-dip galvanized	B	40,–	12,–	52,–
Rack for Gas Cylinders GFG-2, galvanized	B	204,–	182,–	386,–
GFC-M3, hot-dip galvanized	B	1312,–	400,–	1712,–
Grid Floor, hot-dip galvanized	B	510,–	266,–	776,–
Fixture with Safety Chain to Secure Gas Cylinders, hot-dip galvanized	B	40,–	12,–	52,–
Rack for Gas Cylinders GFG-2, galvanized	B	204,–	182,–	386,–
GFC-M4, hot-dip galvanized	B	1380,–	400,–	1780,–
Grid Floor, hot-dip galvanized	B	627,–	266,–	893,–
Fixture with Safety Chain to Secure Gas Cylinders, hot-dip galvanized	B	40,–	12,–	52,–
Rack for Gas Cylinders GFG-2, galvanized	B	204,–	182,–	386,–
GFC-M5, hot-dip galvanized	B	1602,–	400,–	2002,–
Grid Floor, hot-dip galvanized	B	765,–	266,–	1031,–
Fixture with Safety Chain to Secure Gas Cylinders, hot-dip galvanized	B	40,–	12,–	52,–
Rack for Gas Cylinders GFG-2, galvanized	B	204,–	182,–	386,–

Gas Cylinder Containers Type GFC-M/D-DF	Category	Price	Freight charges	Price including freight charges
GFC-M1/D-DF, hot-dip galvanized	B	1424,–	400,–	1824,–
Grid Floor, hot-dip galvanized	B	274,–	182,–	456,–
Fixture with Safety Chain to Secure Gas Cylinders, hot-dip galvanized	B	40,–	12,–	52,–
Rack for Gas Cylinders GFG-2, galvanized	B	204,–	182,–	386,–
GFC-M2/D-DF, hot-dip galvanized	B	1503,–	400,–	1903,–
Grid Floor, hot-dip galvanized	B	375,–	182,–	557,–
Fixture with Safety Chain to Secure Gas Cylinders, hot-dip galvanized	B	40,–	12,–	52,–
Rack for Gas Cylinders GFG-2, galvanized	B	204,–	182,–	386,–
GFC-M3/D-DF, hot-dip galvanized	B	1675,–	400,–	2075,–
Grid Floor, hot-dip galvanized	B	510,–	266,–	776,–
Fixture with Safety Chain to Secure Gas Cylinders, hot-dip galvanized	B	40,–	12,–	52,–
Rack for Gas Cylinders GFG-2, galvanized	B	204,–	182,–	386,–
GFC-M4/D-DF, hot-dip galvanized	B	1810,–	504,–	2314,–
Grid Floor, hot-dip galvanized	B	627,–	266,–	893,–
Fixture with Safety Chain to Secure Gas Cylinders, hot-dip galvanized	B	40,–	12,–	52,–
Rack for Gas Cylinders GFG-2, galvanized	B	204,–	182,–	386,–

Prices in EUR, valid EXW DE-46354 Südlohn, DE-38820 Halberstadt, unpacked
Freight charges valid CPT Norway, islands and oversea territories excluded

BAUER GmbH
Eichendorffstr. 62
46354 Südlohn, Germany

Tel. +49 2862 70 90
info@bauer-suedlohn.com
www.bauer-suedlohn.com

Geschäftsführer
Patrick Bauer, Pascal Bauer
Amtsgericht Coesfeld HRB 5259

TÜVNORD
TÜV NORD CERT GmbH
DIN EN ISO 9001
tuev-nord.de

Price List 0726 en-NO
Environment / Storage

Gas Cylinder Containers Type GFC-M/D-DF	Category	Price	Freight charges	Price including freight charges
GFC-M5/D-DF, hot-dip galvanized	B	2112,–	504,–	2616,–
Grid Floor, hot-dip galvanized	B	765,–	266,–	1031,–
Fixture with Safety Chain to Secure Gas Cylinders, hot-dip galvanized	B	40,–	12,–	52,–
Rack for Gas Cylinders GFG-2, galvanized	B	204,–	182,–	386,–

Gas Cylinder Containers Type GFC-M-DF	Category	Price	Freight charges	Price including freight charges
GFC-M1-DF, hot-dip galvanized	B	1276,–	266,–	1542,–
Grid Floor, hot-dip galvanized	B	274,–	182,–	456,–
Fixture with Safety Chain to Secure Gas Cylinders, hot-dip galvanized	B	40,–	12,–	52,–
Rack for Gas Cylinders GFG-2, galvanized	B	204,–	182,–	386,–
GFC-M2-DF, hot-dip galvanized	B	1346,–	400,–	1746,–
Grid Floor, hot-dip galvanized	B	375,–	182,–	557,–
Fixture with Safety Chain to Secure Gas Cylinders, hot-dip galvanized	B	40,–	12,–	52,–
Rack for Gas Cylinders GFG-2, galvanized	B	204,–	182,–	386,–
GFC-M3-DF, hot-dip galvanized	B	1490,–	400,–	1890,–
Grid Floor, hot-dip galvanized	B	510,–	266,–	776,–
Fixture with Safety Chain to Secure Gas Cylinders, hot-dip galvanized	B	40,–	12,–	52,–
Rack for Gas Cylinders GFG-2, galvanized	B	204,–	182,–	386,–
GFC-M4-DF, hot-dip galvanized	B	1591,–	400,–	1991,–
Grid Floor, hot-dip galvanized	B	627,–	266,–	893,–
Fixture with Safety Chain to Secure Gas Cylinders, hot-dip galvanized	B	40,–	12,–	52,–
Rack for Gas Cylinders GFG-2, galvanized	B	204,–	182,–	386,–
GFC-M5-DF, hot-dip galvanized	B	1812,–	504,–	2316,–
Grid Floor, hot-dip galvanized	B	765,–	266,–	1031,–
Fixture with Safety Chain to Secure Gas Cylinders, hot-dip galvanized	B	40,–	12,–	52,–
Rack for Gas Cylinders GFG-2, galvanized	B	204,–	182,–	386,–

Gas Cylinder Depot Type GFD-G	Category	Price	Freight charges	Price including freight charges
GFD-G 1, galvanized	B	429,–	266,–	695,–
GFD-G 2, galvanized	B	790,–	266,–	1056,–

Gas Cylinder Depot Type GFD-L	Category	Price	Freight charges	Price including freight charges
GFD-L 1, galvanized	B	462,–	182,–	644,–
GFD-L 2, galvanized	B	880,–	266,–	1146,–

Gas Cylinder Depot Type GFD-R	Category	Price	Freight charges	Price including freight charges
GFD-R 2, painted	B	774,–	182,–	956,–
GFD-R 2, hot-dip galvanized	B	798,–	182,–	980,–
GFD-R 4, painted	B	879,–	182,–	1061,–
GFD-R 4, hot-dip galvanized	B	909,–	182,–	1091,–

Hazardous Materials Cabinet Type GS	Category	Price	Freight charges	Price including freight charges
GS-1, painted	B	789,–	266,–	1055,–
Intermediate Storage Level, galvanized	B	90,–	14,–	104,–
GS-1, hot-dip galvanized	B	849,–	266,–	1115,–

Prices in EUR, valid EXW DE-46354 Südlohn, DE-38820 Halberstadt, unpacked
Freight charges valid CPT Norway, islands and oversea territories excluded

BAUER GmbH
Eichendorffstr. 62
46354 Südlohn, Germany

Tel. +49 2862 70 90
info@bauer-suedlohn.com
www.bauer-suedlohn.com

Geschäftsführer
Patrick Bauer, Pascal Bauer
Amtsgericht Coesfeld HRB 5259

TÜVNORD
TÜV NORD CERT GmbH
DIN EN ISO 9001
tuev-nord.de

Price List 0726 en-NO
Environment / Storage

Hazardous Materials Cabinet Type GS	Category	Price	Freight charges	Price including freight charges
Intermediate Storage Level, galvanized	B	90,–	14,–	104,–
GS-2, painted	B	1049,–	400,–	1449,–
Intermediate Storage Level, galvanized	B	90,–	14,–	104,–
GS-2, hot-dip galvanized	B	1139,–	400,–	1539,–
Intermediate Storage Level, galvanized	B	90,–	14,–	104,–
GS-3, painted	B	2143,–	504,–	2647,–
GS-3, hot-dip galvanized	B	2295,–	504,–	2799,–
GS-4, painted	B	2154,–	1375,–	3529,–
GS-4, hot-dip galvanized	B	2340,–	1375,–	3715,–

Gas Cylinder Wall Bracket Type GWH	Category	Price	Freight charges	Price including freight charges
GWH 140-I, hot-dip galvanized	F	26,–	70,–	96,–
GWH 140-II, hot-dip galvanized	F	40,–	70,–	110,–
GWH 140-III, hot-dip galvanized	F	59,–	70,–	129,–
GWH 230-I, hot-dip galvanized	F	28,–	70,–	98,–
GWH 230-II, hot-dip galvanized	F	43,–	70,–	113,–
GWH 230-III, hot-dip galvanized	F	65,–	70,–	135,–
GWH 320-I, hot-dip galvanized	F	29,–	70,–	99,–
GWH 320-II, hot-dip galvanized	F	48,–	70,–	118,–
GWH 320-III, hot-dip galvanized	F	72,–	70,–	142,–

Tilting Canister Stand Type KAH	Category	Price	Freight charges	Price including freight charges
KAH-5, galvanized	A	96,–	70,–	166,–
KAH-25, galvanized	A	109,–	70,–	179,–
KAH-60, galvanized	A	140,–	70,–	210,–

Spill Tray for Canisters/Small Cans Type KGW	Category	Price	Freight charges	Price including freight charges
KGW 1, galvanized	B	92,–	70,–	162,–
KGW 1 V4A, stainless steel 1.4571	B	280,–	70,–	350,–
KGW 2, galvanized	B	96,–	70,–	166,–
KGW 2 V4A, stainless steel 1.4571	B	322,–	70,–	392,–
KGW 3, galvanized	B	100,–	70,–	170,–
KGW 3 V4A, stainless steel 1.4571	B	400,–	70,–	470,–
KGW 4, galvanized	B	117,–	182,–	299,–
KGW 4 V4A, stainless steel 1.4571	B	472,–	182,–	654,–
KGW 5, galvanized	B	161,–	182,–	343,–
KGW 5 V4A, stainless steel 1.4571	B	614,–	182,–	796,–

Spill Tray for Canisters/Small Cans Type KGW/M	Category	Price	Freight charges	Price including freight charges
KGW 1/M, galvanized	B	129,–	70,–	199,–
KGW 1/M V4A, stainless steel 1.4571	B	421,–	70,–	491,–
KGW 2/M, galvanized	B	137,–	70,–	207,–
KGW 2/M V4A, stainless steel 1.4571	B	485,–	70,–	555,–
KGW 3/M, galvanized	B	157,–	70,–	227,–
KGW 3/M V4A, stainless steel 1.4571	B	610,–	70,–	680,–

Prices in EUR, valid EXW DE-46354 Südlohn, DE-38820 Halberstadt, unpacked
Freight charges valid CPT Norway, islands and oversea territories excluded

BAUER GmbH
Eichendorffstr. 62
46354 Südlohn, Germany

Tel. +49 2862 70 90
info@bauer-suedlohn.com
www.bauer-suedlohn.com

Geschäftsführer
Patrick Bauer, Pascal Bauer
Amtsgericht Coesfeld HRB 5259

TÜVNORD
TÜV NORD CERT GmbH
DIN EN ISO 9001
tuev-nord.de

Price List 0726 en-NO
Environment / Storage

Spill Tray for Canisters/Small Cans Type KGW/M	Category	Price	Freight charges	Price including freight charges
KGW 4/M, galvanized	B	182,–	182,–	364,–
KGW 4/M V4A, stainless steel 1.4571	B	730,–	182,–	912,–
KGW 5/M, galvanized	B	235,–	182,–	417,–
KGW 5/M V4A, stainless steel 1.4571	B	962,–	182,–	1144,–

Spill Tray for Canisters/Small Cans on Pallets Type KGW-P	Category	Price	Freight charges	Price including freight charges
KGW-P 1, galvanized	B	98,–	70,–	168,–
KGW-P 1 V4A, stainless steel 1.4571	B	276,–	70,–	346,–
KGW-P 2, galvanized	B	147,–	70,–	217,–
KGW-P 2 V4A, stainless steel 1.4571	B	396,–	70,–	466,–
KGW-P 3, galvanized	B	185,–	182,–	367,–
KGW-P 3 V4A, stainless steel 1.4571	B	607,–	70,–	677,–
KGW-P 4, galvanized	B	175,–	70,–	245,–
KGW-P 4 V4A, stainless steel 1.4571	B	466,–	70,–	536,–

Spill Tray for Canisters/Small Cans on Pallets Type KGW-P/M	Category	Price	Freight charges	Price including freight charges
KGW-P 1/M, galvanized	B	142,–	70,–	212,–
KGW-P 1/M V4A, stainless steel 1.4571	B	399,–	70,–	469,–
KGW-P 2/M, galvanized	B	218,–	70,–	288,–
KGW-P 2/M V4A, stainless steel 1.4571	B	579,–	70,–	649,–
KGW-P 3/M, galvanized	B	265,–	182,–	447,–
KGW-P 3/M V4A, stainless steel 1.4571	B	895,–	182,–	1077,–
KGW-P 4/M, galvanized	B	250,–	182,–	432,–
KGW-P 4/M V4A, stainless steel 1.4571	B	719,–	70,–	789,–

Diesel Filling Point Type KPS	Category	Price	Freight charges	Price including freight charges
KPS 1, painted	B	2966,–	on request	on request
KPS 2, painted	B	3854,–	on request	on request
KPS 3, painted	B	5432,–	on request	on request

Polyethylene Sump Tray for Pallets Type KWP-P	Category	Price	Freight charges	Price including freight charges
KWP-P 20, made of robust polyethylene	B	48,–	70,–	118,–
Deck with Punched Holes LR-PE 20, robust polyethylene, black	B	64,–	14,–	78,–
KWP-P 30, made of robust polyethylene	B	58,–	70,–	128,–
Deck with Punched Holes LR-PE 30, robust polyethylene, black	B	66,–	14,–	80,–
KWP-P 40, made of robust polyethylene	B	65,–	70,–	135,–
Deck with Punched Holes LR-PE 40, robust polyethylene, black	B	70,–	14,–	84,–
KWP-P 60, made of robust polyethylene	B	103,–	70,–	173,–
Deck with punched holes LR-PE 60, robust polyethylene, black	B	73,–	14,–	87,–
KWP-P 100, made of robust polyethylene	B	117,–	182,–	299,–
Deck with punched holes LR-PE 100, robust polyethylene, black	B	90,–	16,–	106,–

Mobile Sump Tray with Perforated Panel Type LPW	Category	Price	Freight charges	Price including freight charges
LPW 60-1, painted	B	627,–	182,–	809,–
Tool Deposit	B	32,–	16,–	48,–

Prices in EUR, valid EXW DE-46354 Südlohn, DE-38820 Halberstadt, unpacked
Freight charges valid CPT Norway, islands and oversea territories excluded

BAUER GmbH
Eichendorffstr. 62
46354 Südlohn, Germany

Tel. +49 2862 70 90
info@bauer-suedlohn.com
www.bauer-suedlohn.com

Geschäftsführer
Patrick Bauer, Pascal Bauer
Amtsgericht Coesfeld HRB 5259

TÜVNORD
TÜV NORD CERT GmbH
DIN EN ISO 9001
tuev-nord.de

Price List 0726 en-NO
Environment / Storage

Mobile Sump Tray with Perforated Panel Type LPW	Category	Price	Freight charges	Price including freight charges
Drip Tray	B	50,–	16,–	66,–
LPW 60-1, hot-dip galvanized	B	645,–	182,–	827,–
Tool Deposit	B	32,–	16,–	48,–
Drip Tray	B	50,–	16,–	66,–
LPW 60-2, painted	B	640,–	182,–	822,–
Tool Deposit	B	32,–	16,–	48,–
Drip Tray	B	50,–	16,–	66,–
LPW 60-2, hot-dip galvanized	B	661,–	182,–	843,–
Tool Deposit	B	32,–	16,–	48,–
Drip Tray	B	50,–	16,–	66,–
LPW 60-3, painted	B	646,–	182,–	828,–
Tool Deposit	B	32,–	16,–	48,–
Drip Tray	B	50,–	16,–	66,–
LPW 60-3, hot-dip galvanized	B	667,–	182,–	849,–
Tool Deposit	B	32,–	16,–	48,–
Drip Tray	B	50,–	16,–	66,–
LPW 200-1, painted	B	822,–	266,–	1088,–
Tool Deposit	B	32,–	16,–	48,–
Drip Tray	B	50,–	16,–	66,–
LPW 200-1, hot-dip galvanized	B	856,–	266,–	1122,–
Tool Deposit	B	32,–	16,–	48,–
Drip Tray	B	50,–	16,–	66,–
LPW 200-2, painted	B	863,–	266,–	1129,–
Tool Deposit	B	32,–	16,–	48,–
Drip Tray	B	50,–	16,–	66,–
LPW 200-2, hot-dip galvanized	B	899,–	266,–	1165,–
Tool Deposit	B	32,–	16,–	48,–
Drip Tray	B	50,–	16,–	66,–
LPW 200-3, painted	B	878,–	266,–	1144,–
Tool Deposit	B	32,–	16,–	48,–
Drip Tray	B	50,–	16,–	66,–
LPW 200-3, hot-dip galvanized	B	914,–	266,–	1180,–
Tool Deposit	B	32,–	16,–	48,–
Drip Tray	B	50,–	16,–	66,–
LPW 200-4, painted	B	1055,–	266,–	1321,–
LPW 200-4, hot-dip galvanized	B	1086,–	266,–	1352,–

Modular Sump Tray Type MAW	Category	Price	Freight charges	Price including freight charges
MAW, painted	B	336,–	182,–	518,–
MAW, hot-dip galvanized	B	366,–	182,–	548,–
Element No. 1: grid grate incl. supporTS, painted	B	78,–	18,–	96,–
Element No. 2: galvanized handle + castors	B	138,–	19,–	157,–
Element No. 3: runners, painted	B	103,–	15,–	118,–
Element No. 3: runners, hot-dip galvanized	B	66,–	15,–	81,–
Element No. 6: surround, galvanized	B	601,–	182,–	783,–

Prices in EUR, valid EXW DE-46354 Südlohn, DE-38820 Halberstadt, unpacked
Freight charges valid CPT Norway, islands and oversea territories excluded

BAUER GmbH
Eichendorffstr. 62
46354 Südlohn, Germany

Tel. +49 2862 70 90
info@bauer-suedlohn.com
www.bauer-suedlohn.com

Geschäftsführer
Patrick Bauer, Pascal Bauer
Amtsgericht Coesfeld HRB 5259

TÜVNORD
TÜV NORD CERT GmbH
DIN EN ISO 9001
tuev-nord.de

Price List 0726 en-NO
Environment / Storage

Spline Sump Type PW	Category	Price	Freight charges	Price including freight charges
PW 200-2, painted	B	245,–	182,–	427,–
PW 200-2, hot-dip galvanized	B	235,–	182,–	417,–
PW 200-4, painted	B	271,–	182,–	453,–
PW 200-4, hot-dip galvanized	B	261,–	182,–	443,–
PW 400-4, painted	B	349,–	182,–	531,–
PW 400-4, hot-dip galvanized	B	332,–	182,–	514,–

Spline Sump Type PWE	Category	Price	Freight charges	Price including freight charges
PWE 200-2, painted	B	217,–	182,–	399,–
PWE 200-2, hot-dip galvanized	B	207,–	182,–	389,–
PWE 200-4, painted	B	236,–	182,–	418,–
PWE 200-4, hot-dip galvanized	B	228,–	182,–	410,–
PWE 400-4, painted	B	288,–	182,–	470,–
PWE 400-4, hot-dip galvanized	B	278,–	182,–	460,–

Hazardous Materials Cabinet with Roller Shutter Door Type RSG	Category	Price	Freight charges	Price including freight charges
RSG-1, painted	B	1906,–	266,–	2172,–
Set of 4 Feet, height adjustable	B	80,–	9,–	89,–
RSG-2, painted	B	1920,–	266,–	2186,–
Set of 4 Feet, height adjustable	B	80,–	9,–	89,–
RSG-3, painted	B	1971,–	266,–	2237,–
Set of 4 Feet, height adjustable	B	80,–	9,–	89,–
RSG-4, painted	B	2109,–	400,–	2509,–
Set of 4 Feet, height adjustable	B	80,–	9,–	89,–

Shelf Sump with Polyethylene Inlay Type RW PE	Category	Price	Freight charges	Price including freight charges
RW 1800 PE, painted	B	1044,–	266,–	1310,–
RW 1800 PE, hot-dip galvanized	B	1100,–	266,–	1366,–
RW 2200-1 PE, painted	B	1089,–	266,–	1355,–
RW 2200-1 PE, hot-dip galvanized	B	1147,–	266,–	1413,–
RW 2200-2 PE, painted	B	1276,–	266,–	1542,–
RW 2200-2 PE, hot-dip galvanized	B	1341,–	266,–	1607,–
RW 2700-1 PE, painted	B	1108,–	320,–	1428,–
RW 2700-1 PE, hot-dip galvanized	B	1192,–	320,–	1512,–
RW 2700-2 PE, painted	B	1266,–	320,–	1586,–
RW 2700-2 PE, hot-dip galvanized	B	1365,–	320,–	1685,–
RW 2700-3 PE, painted	B	1466,–	320,–	1786,–
RW 2700-3 PE, hot-dip galvanized	B	1592,–	320,–	1912,–
RW 3300-1 PE, painted	B	1417,–	320,–	1737,–
RW 3300-1 PE, hot-dip galvanized	B	1510,–	320,–	1830,–
RW 3300-2 PE, painted	B	1535,–	320,–	1855,–
RW 3300-2 PE, hot-dip galvanized	B	1637,–	320,–	1957,–
RW 3300-3 PE, painted	B	1738,–	453,–	2191,–
RW 3300-3 PE, hot-dip galvanized	B	1850,–	453,–	2303,–

Prices in EUR, valid EXW DE-46354 Südlohn, DE-38820 Halberstadt, unpacked
Freight charges valid CPT Norway, islands and oversea territories excluded

BAUER GmbH
Eichendorffstr. 62
46354 Südlohn, Germany

Tel. +49 2862 70 90
info@bauer-suedlohn.com
www.bauer-suedlohn.com

Geschäftsführer
Patrick Bauer, Pascal Bauer
Amtsgericht Coesfeld HRB 5259

TÜVNORD
TÜV NORD CERT GmbH
DIN EN ISO 9001
tuev-nord.de

Price List 0726 en-NO
Environment / Storage

Shelf Sump Type RW	Category	Price	Freight charges	Price including freight charges
RW 1800, painted	B	507,–	182,–	689,–
RW 1800, hot-dip galvanized	B	561,–	182,–	743,–
RW 2200-1, painted	B	519,–	182,–	701,–
RW 2200-1, hot-dip galvanized	B	577,–	182,–	759,–
RW 2200-2, painted	B	532,–	266,–	798,–
RW 2200-2, hot-dip galvanized	B	597,–	266,–	863,–
RW 2700-1, painted	B	528,–	320,–	848,–
RW 2700-1, hot-dip galvanized	B	611,–	320,–	931,–
RW 2700-2, painted	B	607,–	320,–	927,–
RW 2700-2, hot-dip galvanized	B	706,–	320,–	1026,–
RW 2700-3, painted	B	657,–	320,–	977,–
RW 2700-3, hot-dip galvanized	B	781,–	320,–	1101,–
RW 3300-1, painted	B	680,–	320,–	1000,–
RW 3300-1, hot-dip galvanized	B	774,–	320,–	1094,–
RW 3300-2, painted	B	748,–	320,–	1068,–
RW 3300-2, hot-dip galvanized	B	850,–	320,–	1170,–
RW 3300-3, painted	B	834,–	320,–	1154,–
RW 3300-3, hot-dip galvanized	B	945,–	320,–	1265,–

Shelf Sump with Polyethylene Inlay Type RW-GR PE	Category	Price	Freight charges	Price including freight charges
RW-GR 1800 PE, painted	B	1178,–	266,–	1444,–
RW-GR 1800 PE, hot-dip galvanized	B	1231,–	266,–	1497,–
RW-GR 2200-1 PE, painted	B	1255,–	266,–	1521,–
RW-GR 2200-1 PE, hot-dip galvanized	B	1313,–	266,–	1579,–
RW-GR 2200-2 PE, painted	B	1443,–	400,–	1843,–
RW-GR 2200-2 PE, hot-dip galvanized	B	1505,–	400,–	1905,–
RW-GR 2700-1 PE, painted	B	1313,–	453,–	1766,–
RW-GR 2700-1 PE, hot-dip galvanized	B	1395,–	453,–	1848,–
RW-GR 2700-2 PE, painted	B	1469,–	453,–	1922,–
RW-GR 2700-2 PE, hot-dip galvanized	B	1570,–	453,–	2023,–
RW-GR 2700-3 PE, painted	B	1671,–	453,–	2124,–
RW-GR 2700-3 PE, hot-dip galvanized	B	1776,–	453,–	2229,–
RW-GR 3300-1 PE, painted	B	1790,–	453,–	2243,–
RW-GR 3300-1 PE, hot-dip galvanized	B	1882,–	453,–	2335,–
RW-GR 3300-2 PE, painted	B	1906,–	453,–	2359,–
RW-GR 3300-2 PE, hot-dip galvanized	B	2018,–	453,–	2471,–
RW-GR 3300-3 PE, painted	B	2110,–	557,–	2667,–
RW-GR 3300-3 PE, hot-dip galvanized	B	2222,–	557,–	2779,–
RW-GR 3600-3 PE, painted	B	2428,–	569,–	2997,–
RW-GR 3600-3 PE, hot-dip galvanized	B	2580,–	569,–	3149,–

Shelf Sump Type RW-GR	Category	Price	Freight charges	Price including freight charges
RW-GR 1800, painted	B	641,–	266,–	907,–
RW-GR 1800, hot-dip galvanized	B	696,–	266,–	962,–
RW-GR 2200-1, painted	B	686,–	266,–	952,–

Prices in EUR, valid EXW DE-46354 Südlohn, DE-38820 Halberstadt, unpacked
Freight charges valid CPT Norway, islands and oversea territories excluded

BAUER GmbH
Eichendorffstr. 62
46354 Südlohn, Germany

Tel. +49 2862 70 90
info@bauer-suedlohn.com
www.bauer-suedlohn.com

Geschäftsführer
Patrick Bauer, Pascal Bauer
Amtsgericht Coesfeld HRB 5259

TÜVNORD
TÜV NORD CERT GmbH
DIN EN ISO 9001
tuev-nord.de

Price List 0726 en-NO
Environment / Storage

Shelf Sump Type RW-GR	Category	Price	Freight charges	Price including freight charges
RW-GR 2200-1, hot-dip galvanized	B	745,–	266,–	1011,–
RW-GR 2200-2, painted	B	700,–	400,–	1100,–
RW-GR 2200-2, hot-dip galvanized	B	761,–	400,–	1161,–
RW-GR 2700-1, painted	B	732,–	320,–	1052,–
RW-GR 2700-1, hot-dip galvanized	B	815,–	453,–	1268,–
RW-GR 2700-2, painted	B	811,–	453,–	1264,–
RW-GR 2700-2, hot-dip galvanized	B	911,–	453,–	1364,–
RW-GR 2700-3, painted	B	861,–	453,–	1314,–
RW-GR 2700-3, hot-dip galvanized	B	966,–	453,–	1419,–
RW-GR 3300-1, painted	B	1052,–	453,–	1505,–
RW-GR 3300-1, hot-dip galvanized	B	1146,–	453,–	1599,–
RW-GR 3300-2, painted	B	1119,–	453,–	1572,–
RW-GR 3300-2, hot-dip galvanized	B	1230,–	453,–	1683,–
RW-GR 3300-3, painted	B	1206,–	453,–	1659,–
RW-GR 3300-3, hot-dip galvanized	B	1317,–	453,–	1770,–
RW-GR 3600-3, painted	B	1330,–	453,–	1783,–
RW-GR 3600-3, hot-dip galvanized	B	1483,–	453,–	1936,–

Safety Cabinet Type SIW	Category	Price	Freight charges	Price including freight charges
SIW 1005	B	596,–	182,–	778,–
SIW 2005	B	751,–	266,–	1017,–

Diesel Filling Point Type TAW	Category	Price	Freight charges	Price including freight charges
TAW 1, painted	B	2448,–	on request	on request
TAW 2, painted	B	3195,–	on request	on request
TAW 3, painted	B	4603,–	on request	on request

Environmental Shelve Type UR	Category	Price	Freight charges	Price including freight charges
UR-G 2200, painted	B	1827,–	455,–	2282,–
Grid Set, hot-dip galvanized	B	198,–	182,–	380,–
Crash Guard	B	75,–	9,–	84,–
UR-G 2700, painted	B	1968,–	455,–	2423,–
Grid Set, hot-dip galvanized	B	245,–	182,–	427,–
Crash Guard	B	75,–	9,–	84,–
UR-G 3300, painted	B	2749,–	557,–	3306,–
Grid Set, hot-dip galvanized	B	297,–	182,–	479,–
Crash Guard	B	75,–	9,–	84,–
UR-A 2200, painted	B	1395,–	455,–	1850,–
Grid Set, hot-dip galvanized	B	198,–	182,–	380,–
Crash Guard	B	75,–	9,–	84,–
UR-A 2700, painted	B	1535,–	455,–	1990,–
Grid Set, hot-dip galvanized	B	245,–	182,–	427,–
Crash Guard	B	75,–	9,–	84,–
UR-A 3300, painted	B	2317,–	557,–	2874,–
Grid Set, hot-dip galvanized	B	297,–	182,–	479,–

Prices in EUR, valid EXW DE-46354 Südlohn, DE-38820 Halberstadt, unpacked
Freight charges valid CPT Norway, islands and oversea territories excluded

BAUER GmbH
Eichendorffstr. 62
46354 Südlohn, Germany

Tel. +49 2862 70 90
info@bauer-suedlohn.com
www.bauer-suedlohn.com

Geschäftsführer
Patrick Bauer, Pascal Bauer
Amtsgericht Coesfeld HRB 5259

TÜVNORD
TÜV NORD CERT GmbH
DIN EN ISO 9001
tuev-nord.de

Price List 0726 en-NO
Environment / Storage

Environmental Shelve Type UR	Category	Price	Freight charges	Price including freight charges
Crash Guard	B	75,–	9,–	84,–

Stainless Steel Sump Tray Type VAW	Category	Price	Freight charges	Price including freight charges
VAW-1, stainless steel 1.4571	B	990,–	182,–	1172,–
Grid, stainless steel 1.4571	B	494,–	14,–	508,–
Grid, hot-dip galvanized	B	71,–	14,–	85,–
VAW-2, stainless steel 1.4571	B	1079,–	182,–	1261,–
Grid, stainless steel 1.4571	B	731,–	16,–	747,–
Grid, hot-dip galvanized	B	95,–	38,–	133,–
VAW-4/A, stainless steel 1.4571	B	1236,–	182,–	1418,–
Grid, stainless steel 1.4571	B	1061,–	22,–	1083,–
Grid, hot-dip galvanized	B	124,–	22,–	146,–
VAW-4/B, stainless steel 1.4571	B	1511,–	182,–	1693,–
Grid, stainless steel 1.4571	B	1461,–	27,–	1488,–
Grid, hot-dip galvanized	B	169,–	27,–	196,–
VAW 1000 (Stainless Steel Grid), stainless steel 1.4571	B	3909,–	294,–	4203,–
VAW 1000 (Hot-dip Galvanized Grid), stainless steel 1.4571	B	2868,–	294,–	3162,–
VAW 1000-2 (Stainless Steel Grid), stainless steel 1.4571	B	5472,–	502,–	5974,–
VAW 1000-2 (Hot-dip Galvanized Grid), stainless steel 1.4571	B	3561,–	502,–	4063,–

Heating Chamber Type WK	Category	Price	Freight charges	Price including freight charges
WK 29-2 E65, painted	C	30688,–	on request	on request
WK 29-2 E85, painted	C	30859,–	on request	on request
WK 57-2 E65, painted	C	43080,–	on request	on request
WK 57-2 E85, painted	C	45540,–	on request	on request

Sump Tray Type WM	Category	Price	Freight charges	Price including freight charges
WM-2/200, hot-dip galvanized	B	290,–	182,–	472,–
Drum Support FA 60-1, hot-dip galvanized	B	109,–	15,–	124,–
Drum Support FA 60-2, hot-dip galvanized	B	118,–	18,–	136,–
Drum Support FA 60-3, hot-dip galvanized	B	138,–	21,–	159,–
Drum Support FA 200-1, hot-dip galvanized	B	118,–	15,–	133,–
Can Shelf Type GR-A, galvanized	B	138,–	70,–	208,–
Can Shelf Type GR-B, galvanized	B	138,–	70,–	208,–
Can Shelf Type GR-C, galvanized	B	138,–	70,–	208,–
WM-4/200, hot-dip galvanized	B	330,–	182,–	512,–
Drum Support FA 60-1, hot-dip galvanized	B	109,–	15,–	124,–
Drum Support FA 60-2, hot-dip galvanized	B	118,–	18,–	136,–
Drum Support FA 60-3, hot-dip galvanized	B	138,–	21,–	159,–
Drum Support FA 200-1, hot-dip galvanized	B	118,–	15,–	133,–
Drum Support FA 200-2, hot-dip galvanized	B	138,–	22,–	160,–
Can Shelf Type GR-A, galvanized	B	138,–	70,–	208,–
Can Shelf Type GR-B, galvanized	B	138,–	70,–	208,–
Can Shelf Type GR-C, galvanized	B	138,–	70,–	208,–
WM-4/400, hot-dip galvanized	B	396,–	266,–	662,–

Prices in EUR, valid EXW DE-46354 Südlohn, DE-38820 Halberstadt, unpacked
Freight charges valid CPT Norway, islands and oversea territories excluded

BAUER GmbH
Eichendorffstr. 62
46354 Südlohn, Germany

Tel. +49 2862 70 90
info@bauer-suedlohn.com
www.bauer-suedlohn.com

Geschäftsführer
Patrick Bauer, Pascal Bauer
Amtsgericht Coesfeld HRB 5259

TÜVNORD
TÜV NORD CERT GmbH
DIN EN ISO 9001
tuev-nord.de

Price List 0726 en-NO
Environment / Storage

Sump Tray Type WO	Category	Price	Freight charges	Price including freight charges
WO-2/200, hot-dip galvanized	B	221,–	182,–	403,–
WO-4/200, hot-dip galvanized	B	240,–	182,–	422,–
WO-4/400, hot-dip galvanized	B	309,–	182,–	491,–

Polyethylene Sump Pallet Type WP	Category	Price	Freight charges	Price including freight charges
WP 1/11, made of robust polyethylene	B	1089,–	182,–	1271,–
WP 2/11, made of robust polyethylene	B	1377,–	182,–	1559,–
Dispensing Tray VB 2, robust polyethylene, blue	B	158,–	70,–	228,–

Polyethylene Sump Pallet Type WPA-PE	Category	Price	Freight charges	Price including freight charges
WPA-PE 2/2, made of robust polyethylene	B	324,–	182,–	506,–
WPA-PE 4/2, made of robust polyethylene	B	512,–	182,–	694,–

Polyethylene Sump Pallet Type WP-PE	Category	Price	Freight charges	Price including freight charges
WP-PE 1/11, made of robust polyethylene	B	1179,–	182,–	1361,–
Dispensing Tray VB 1, robust polyethylene, blue	B	169,–	70,–	239,–
WP-PE 2/11, made of robust polyethylene	B	1560,–	320,–	1880,–
Dispensing Tray VB 2, robust polyethylene, blue	B	158,–	70,–	228,–
WP-PE 2/2, made of robust polyethylene	B	301,–	182,–	483,–
WP-PE 4/2, made of robust polyethylene	B	469,–	182,–	651,–
WP-PE 4/4, made of robust polyethylene	B	487,–	182,–	669,–
WP-PE 8/11, made of robust polyethylene	B	1560,–	320,–	1880,–

Mobile Polyethylene Sump Tray Type WPT	Category	Price	Freight charges	Price including freight charges
WPT 230, made of robust polyethylene	B	538,–	182,–	720,–

Prices in EUR, valid EXW DE-46354 Südlohn, DE-38820 Halberstadt, unpacked
Freight charges valid CPT Norway, islands and oversea territories excluded

BAUER GmbH
Eichendorffstr. 62
46354 Südlohn, Germany

Tel. +49 2862 70 90
info@bauer-suedlohn.com
www.bauer-suedlohn.com

Geschäftsführer
Patrick Bauer, Pascal Bauer
Amtsgericht Coesfeld HRB 5259

TÜVNORD
TÜV NORD CERT GmbH
DIN EN ISO 9001
tuev-nord.de

Price List 0726 en-NO
Hazardous Materials Containers

Fluorescent Tube Box Type AL-D	Category	Price	Freight charges	Price including freight charges
AL-D 150, aluminium	C	518,–	182,–	700,–
AL-D 200, aluminium	C	571,–	182,–	753,–

Collecting Container Type ASB	Category	Price	Freight charges	Price including freight charges
ASB 250, hot-dip galvanized	C	2038,–	400,–	2438,–
ASB 450-I, hot-dip galvanized	C	2155,–	400,–	2555,–

Special Waste Container Type ASK	Category	Price	Freight charges	Price including freight charges
ASK 540-4, hot-dip galvanized	C	on request	on request	on request

Duo-Container Type DC	Category	Price	Freight charges	Price including freight charges
DC 450, hot-dip galvanized	C	2347,–	on request	on request
Stainless steel strainer	D	118,–	9,–	127,–
Wing nut spanner for M12, hot-dip galvanized	F	35,–	15,–	50,–
DC 1000, hot-dip galvanized	C	2493,–	on request	on request
Stainless steel strainer	D	118,–	9,–	127,–
Wing nut spanner for M12, hot-dip galvanized	F	35,–	15,–	50,–

Lithium-Ion Storage Container Type LIL	Category	Price	Freight charges	Price including freight charges
LIL 30, hot-dip galvanized	B	1937,–	182,–	2119,–
LIL 90, hot-dip galvanized	B	2816,–	266,–	3082,–
Castor Set, polyamide, Load capacity 1050 kg / castor set	A	156,–	15,–	171,–
LIL 220, hot-dip galvanized	B	4864,–	400,–	5264,–
Castor Set, polyamide, Load capacity 1050 kg / castor set	A	156,–	15,–	171,–
LIL 280, hot-dip galvanized	B	5884,–	400,–	6284,–
Castor Set, polyamide, Load capacity 1050 kg / castor set	A	156,–	15,–	171,–
LIL 340, hot-dip galvanized	B	6792,–	400,–	7192,–
Castor Set, polyamide, Load capacity 1050 kg / castor set	A	156,–	15,–	171,–

MobiCont Type M 800	Category	Price	Freight charges	Price including freight charges
M 800, painted	C	1389,–	400,–	1789,–
Level Indicator	C	220,–	9,–	229,–
Funnel for filling, PP	D	68,–	9,–	77,–
Filling/Extraction lid	C	68,–	9,–	77,–
Lid, galvanized, without a lock	C	195,–	15,–	210,–
Lid, galvanized, with square lock	C	242,–	18,–	260,–
Lid, galvanized, with cylinder lock	C	242,–	18,–	260,–
Castor Set, polyamide, Load capacity 1350 kg / castor set	A	192,–	15,–	207,–
Hand Pump K 10 C, connects to drum thread, suitable for fuels and heating fuel	C	95,–	14,–	109,–
Hose Kit (1.5 m) for Hand Pump Type K 10 C, suitable for diesel and fuel	C	68,–	14,–	82,–
Hose Kit (3 m) for Hand Pump Type K 10 C, suitable for diesel and fuel	C	96,–	15,–	111,–

Prices in EUR, valid EXW DE-46354 Südlohn, DE-38820 Halberstadt, unpacked
Freight charges valid CPT Norway, islands and oversea territories excluded

BAUER GmbH
Eichendorffstr. 62
46354 Südlohn, Germany

Tel. +49 2862 70 90
info@bauer-suedlohn.com
www.bauer-suedlohn.com

Geschäftsführer
Patrick Bauer, Pascal Bauer
Amtsgericht Coesfeld HRB 5259

TÜVNORD
TÜV NORD CERT GmbH
DIN EN ISO 9001
tuev-nord.de

Price List 0726 en-NO
Hazardous Materials Containers

MobiCont Type M 800	Category	Price	Freight charges	Price including freight charges
Hose Kit (4 m) for Hand Pump Type K 10 C, suitable for diesel and fuel	C	109,–	15,–	124,–
Electric Pump TecPump 400 DC 12V	C	510,–	15,–	525,–
Electric Pump TecPump 400 DC 24V	C	510,–	15,–	525,–
Electric Pump TecPump 600 AC 230V	C	510,–	15,–	525,–
M 800, hot-dip galvanized	C	1483,–	400,–	1883,–
Level Indicator	C	220,–	9,–	229,–
Funnel for filling, PP	D	68,–	9,–	77,–
Filling/Extraction lid	C	68,–	9,–	77,–
Lid, galvanized, without a lock	C	195,–	15,–	210,–
Lid, galvanized, with square lock	C	242,–	18,–	260,–
Lid, galvanized, with cylinder lock	C	242,–	18,–	260,–
Castor Set, polyamide, Load capacity 1350 kg / castor set	A	192,–	15,–	207,–
Hand Pump K 10 C, connects to drum thread, suitable for fuels and heating fuel	C	95,–	14,–	109,–
Hose Kit (1.5 m) for Hand Pump Type K 10 C, suitable for diesel and fuel	C	68,–	14,–	82,–
Hose Kit (3 m) for Hand Pump Type K 10 C, suitable for diesel and fuel	C	96,–	15,–	111,–
Hose Kit (4 m) for Hand Pump Type K 10 C, suitable for diesel and fuel	C	109,–	15,–	124,–
Electric Pump TecPump 400 DC 12V	C	510,–	15,–	525,–
Electric Pump TecPump 400 DC 24V	C	510,–	15,–	525,–
Electric Pump TecPump 600 AC 230V	C	510,–	15,–	525,–

MobiCont Type MD	Category	Price	Freight charges	Price including freight charges
MD 800, painted	C	1934,–	400,–	2334,–
Level Indicator	C	220,–	9,–	229,–
Hand Pump K 10 C, connects to drum thread, suitable for fuels and heating fuel	C	95,–	14,–	109,–
Hose Kit (1.5 m) for Hand Pump Type K 10 C, suitable for diesel and fuel	C	68,–	14,–	82,–
Hose Kit (3 m) for Hand Pump Type K 10 C, suitable for diesel and fuel	C	96,–	15,–	111,–
Hose Kit (4 m) for Hand Pump Type K 10 C, suitable for diesel and fuel	C	109,–	15,–	124,–
Electric Pump TecPump 400 DC 12V	C	510,–	15,–	525,–
Electric Pump TecPump 400 DC 24V	C	510,–	15,–	525,–
Electric Pump TecPump 600 AC 230V	C	510,–	15,–	525,–
MD 800, hot-dip galvanized	C	2025,–	400,–	2425,–
Level Indicator	C	220,–	9,–	229,–
Hand Pump K 10 C, connects to drum thread, suitable for fuels and heating fuel	C	95,–	14,–	109,–
Hose Kit (1.5 m) for Hand Pump Type K 10 C, suitable for diesel and fuel	C	68,–	14,–	82,–
Hose Kit (3 m) for Hand Pump Type K 10 C, suitable for diesel and fuel	C	96,–	15,–	111,–
Hose Kit (4 m) for Hand Pump Type K 10 C, suitable for diesel and fuel	C	109,–	15,–	124,–
Electric Pump TecPump 400 DC 12V	C	510,–	15,–	525,–
Electric Pump TecPump 400 DC 24V	C	510,–	15,–	525,–
Electric Pump TecPump 600 AC 230V	C	510,–	15,–	525,–

MobiCont Type MO	Category	Price	Freight charges	Price including freight charges
MO 800, painted	C	on request	on request	on request
Level Indicator	C	220,–	9,–	229,–
MO 800, hot-dip galvanized	C	on request	on request	on request
Level Indicator	C	220,–	9,–	229,–

Prices in EUR, valid EXW DE-46354 Südlohn, DE-38820 Halberstadt, unpacked
Freight charges valid CPT Norway, islands and oversea territories excluded

BAUER GmbH
Eichendorffstr. 62
46354 Südlohn, Germany

Tel. +49 2862 70 90
info@bauer-suedlohn.com
www.bauer-suedlohn.com

Geschäftsführer
Patrick Bauer, Pascal Bauer
Amtsgericht Coesfeld HRB 5259

TÜVNORD
TÜV NORD CERT GmbH
DIN EN ISO 9001
tuev-nord.de

Price List 0726 en-NO
Hazardous Materials Containers

Fuel Container Type MT	Category	Price	Freight charges	Price including freight charges
MT 450, hot-dip galvanized	C	2223,–	400,–	2623,–
Level Indicator	C	220,–	9,–	229,–
Hand Pump K 10 C, connects to drum thread, suitable for fuels and heating fuel	C	95,–	14,–	109,–
Digital Flow Counter FMT 3 with screwed joints	C	320,–	9,–	329,–
Electric Pump TecPump 400 DC 12V	C	510,–	12,–	522,–
Electric Pump TecPump 400 DC 24V	C	510,–	12,–	522,–
Electric Pump TecPump 600 AC 230V	C	510,–	12,–	522,–
Counter Z 400, Retrofit Kit for Electric Pumps TecPump 400 DC 12V, 400 DC 24V and 600 AC 230V	C	159,–	9,–	168,–
MT 600, hot-dip galvanized	C	2644,–	400,–	3044,–
Level Indicator	C	220,–	9,–	229,–
Hand Pump K 10 C, connects to drum thread, suitable for fuels and heating fuel	C	95,–	14,–	109,–
Digital Flow Counter FMT 3 with screwed joints	C	320,–	9,–	329,–
Electric Pump TecPump 400 DC 12V	C	510,–	12,–	522,–
Electric Pump TecPump 400 DC 24V	C	510,–	12,–	522,–
Electric Pump TecPump 600 AC 230V	C	510,–	12,–	522,–
Counter Z 400, Retrofit Kit for Electric Pumps TecPump 400 DC 12V, 400 DC 24V and 600 AC 230V	C	159,–	9,–	168,–
MT 1000, hot-dip galvanized	C	2858,–	504,–	3362,–
Level Indicator	C	220,–	9,–	229,–
Hand Pump K 10 C, connects to drum thread, suitable for fuels and heating fuel	C	95,–	14,–	109,–
Digital Flow Counter FMT 3 with screwed joints	C	320,–	9,–	329,–
Electric Pump TecPump 400 DC 12V	C	510,–	12,–	522,–
Electric Pump TecPump 400 DC 24V	C	510,–	12,–	522,–
Electric Pump TecPump 600 AC 230V	C	510,–	12,–	522,–
Counter Z 400, Retrofit Kit for Electric Pumps TecPump 400 DC 12V, 400 DC 24V and 600 AC 230V	C	159,–	9,–	168,–

MobiCont Type MW	Category	Price	Freight charges	Price including freight charges
MW 800, painted	C	1783,–	400,–	2183,–
Level Indicator	C	220,–	9,–	229,–
Filling coupling	C	53,–	8,–	61,–
Tank heating, 220 W	C	384,–	12,–	396,–
Tank fitting	B	67,–	9,–	76,–
Anti-siphon valve	D	71,–	8,–	79,–
Aeration/Vent valve	C	27,–	8,–	35,–
MW 800, hot-dip galvanized	C	1877,–	400,–	2277,–
Level Indicator	C	220,–	9,–	229,–
Filling coupling	C	53,–	8,–	61,–
Tank heating, 220 W	C	384,–	12,–	396,–
Tank fitting	B	67,–	9,–	76,–
Anti-siphon valve	D	71,–	8,–	79,–
Aeration/Vent valve	C	27,–	8,–	35,–

Special Waste Container Type SAF	Category	Price	Freight charges	Price including freight charges
SAF 450, hot-dip galvanized	C	1136,–	on request	on request
SAF 600, hot-dip galvanized	C	1136,–	on request	on request
SAF 1000, hot-dip galvanized	C	1136,–	on request	on request

Prices in EUR, valid EXW DE-46354 Südlohn, DE-38820 Halberstadt, unpacked
Freight charges valid CPT Norway, islands and oversea territories excluded

BAUER GmbH
Eichendorffstr. 62
46354 Südlohn, Germany

Tel. +49 2862 70 90
info@bauer-suedlohn.com
www.bauer-suedlohn.com

Geschäftsführer
Patrick Bauer, Pascal Bauer
Amtsgericht Coesfeld HRB 5259

TÜVNORD
TÜV NORD CERT GmbH
DIN EN ISO 9001
tuev-nord.de

Price List 0726 en-NO
Hazardous Materials Containers

Large Salvage Packaging Type SAG	Category	Price	Freight charges	Price including freight charges
SAG 800, hot-dip galvanized	C	1141,–	400,–	1541,–
SAG 1500, hot-dip galvanized	C	2151,–	on request	on request
Polyethylene sacks, 25 pieces on roll	C	187,–	41,–	228,–
SAG 2100, hot-dip galvanized	C	2257,–	on request	on request
Polyethylene sacks, 25 pieces on roll	C	187,–	41,–	228,–
SAG 2700, hot-dip galvanized	C	2331,–	on request	on request
Polyethylene sacks, 25 pieces on roll	C	187,–	41,–	228,–

Special Waste Container Type SAP	Category	Price	Freight charges	Price including freight charges
SAP 450, hot-dip galvanized	C	953,–	on request	on request
Polyethylene sacks, 50 pieces on roll - 0,085 mm	C	139,–	62,–	201,–
Polyethylene sacks, 50 pieces on roll - 0,16 mm	C	246,–	182,–	428,–
SAP 600, hot-dip galvanized	C	953,–	on request	on request
Polyethylene sacks, 50 pieces on roll - 0,085 mm	C	139,–	62,–	201,–
Polyethylene sacks, 50 pieces on roll - 0,16 mm	C	246,–	182,–	428,–
SAP 800, hot-dip galvanized	C	953,–	on request	on request
Polyethylene sacks, 50 pieces on roll - 0,085 mm	C	139,–	62,–	201,–
Polyethylene sacks, 50 pieces on roll - 0,16 mm	C	246,–	182,–	428,–

Special Waste Container Type SAP-1	Category	Price	Freight charges	Price including freight charges
SAP 450-1, hot-dip galvanized	C	891,–	on request	on request
Polyethylene sacks, 50 pieces on roll - 0,085 mm	C	139,–	62,–	201,–
Polyethylene sacks, 50 pieces on roll - 0,16 mm	C	246,–	182,–	428,–
SAP 600-1, hot-dip galvanized	C	891,–	on request	on request
Polyethylene sacks, 50 pieces on roll - 0,085 mm	C	139,–	62,–	201,–
Polyethylene sacks, 50 pieces on roll - 0,16 mm	C	246,–	182,–	428,–
SAP 800-1, hot-dip galvanized	C	891,–	on request	on request
Polyethylene sacks, 50 pieces on roll - 0,085 mm	C	139,–	62,–	201,–
Polyethylene sacks, 50 pieces on roll - 0,16 mm	C	246,–	182,–	428,–
SAP 800-3, hot-dip galvanized	C	874,–	on request	on request
Polyethylene sacks, 50 pieces on roll - 0,085 mm	C	139,–	62,–	201,–
Polyethylene sacks, 50 pieces on roll - 0,16 mm	C	246,–	182,–	428,–

Used Battery Container Type SAP 600 K	Category	Price	Freight charges	Price including freight charges
SAP 600 K, hot-dip galvanized	C	1286,–	on request	on request

Used Battery Container Type SAP 601 K	Category	Price	Freight charges	Price including freight charges
SAP 601 K, hot-dip galvanized	C	1141,–	on request	on request

Special Waste Container Type SAS	Category	Price	Freight charges	Price including freight charges
SAS 800, hot-dip galvanized	C	963,–	on request	on request

Hazardous Materials Container Type SF	Category	Price	Freight charges	Price including freight charges
SF 240, hot-dip galvanized	C	on request	on request	on request

Prices in EUR, valid EXW DE-46354 Südlohn, DE-38820 Halberstadt, unpacked
Freight charges valid CPT Norway, islands and oversea territories excluded

BAUER GmbH
Eichendorffstr. 62
46354 Südlohn, Germany

Tel. +49 2862 70 90
info@bauer-suedlohn.com
www.bauer-suedlohn.com

Geschäftsführer
Patrick Bauer, Pascal Bauer
Amtsgericht Coesfeld HRB 5259

TÜVNORD
TÜV NORD CERT GmbH
DIN EN ISO 9001
tuev-nord.de

Price List 0726 en-NO
Hazardous Materials Containers

Fluorescent Tube Box Type SL	Category	Price	Freight charges	Price including freight charges
SL 150, painted	C	688,–	266,–	954,–
SL 150, hot-dip galvanized	C	822,–	266,–	1088,–
SL 200, painted	C	766,–	266,–	1032,–
SL 200, hot-dip galvanized	C	902,–	400,–	1302,–

Fluorescent Tube Box Type SL-D	Category	Price	Freight charges	Price including freight charges
SL-D 150, painted	C	757,–	266,–	1023,–
Removable Tray, galvanized	C	87,–	10,–	97,–
SL-D 150, hot-dip galvanized	C	880,–	266,–	1146,–
Removable Tray, galvanized	C	87,–	10,–	97,–
SL-D 200, painted	C	837,–	266,–	1103,–
Removable Tray, galvanized	C	87,–	10,–	97,–
SL-D 200, hot-dip galvanized	C	973,–	266,–	1239,–
Removable Tray, galvanized	C	87,–	10,–	97,–

Fluorescent Tube Box Type SL-N	Category	Price	Freight charges	Price including freight charges
SL-N 220, painted	C	861,–	266,–	1127,–
SL-N 220, hot-dip galvanized	C	1003,–	266,–	1269,–

Special Waste Container Type SP	Category	Price	Freight charges	Price including freight charges
SP 100, hot-dip galvanized	C	on request	on request	on request
SP 240, hot-dip galvanized	C	on request	on request	on request

Transport Box for Aerosol Cans Type STB	Category	Price	Freight charges	Price including freight charges
STB 1000, hot-dip galvanized	C	1158,–	on request	on request
Polyethylene sacks, 50 pieces on roll	C	192,–	62,–	254,–
Absorbent felt, 100 pieces	C	366,–	70,–	436,–

Prices in EUR, valid EXW DE-46354 Südlohn, DE-38820 Halberstadt, unpacked
Freight charges valid CPT Norway, islands and oversea territories excluded

BAUER GmbH
Eichendorffstr. 62
46354 Südlohn, Germany

Tel. +49 2862 70 90
info@bauer-suedlohn.com
www.bauer-suedlohn.com

Geschäftsführer
Patrick Bauer, Pascal Bauer
Amtsgericht Coesfeld HRB 5259

TÜVNORD
TÜV NORD CERT GmbH
DIN EN ISO 9001
tuev-nord.de