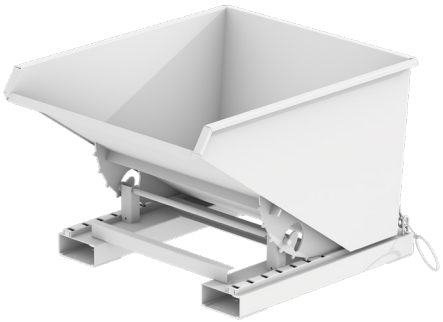

PRICE LIST 0726 EN-PT

FORKLIFT TRUCK ATTACHMENTS

WORKSPACE MATERIAL HANDLING

ENVIRONMENT / STORAGE

HAZARDOUS MATERIALS CONTAINERS

INNOVATION – CONSTRUCTION – PRODUCTION

. . . since 1966

Price List 0726 en-PT
Forklift Truck Attachments

Drum Gripper Type 3P	Category	Price	Freight charges	Price including freight charges
3P, painted	B	942,–	141,–	1083,–
3P, hot-dip galvanized	B	990,–	141,–	1131,–

Tilting Container Type 3S	Category	Price	Freight charges	Price including freight charges
3S 300, painted	A	1244,–	225,–	1469,–
Lid, galvanized	A	174,–	18,–	192,–
Castor Set, polyamide, Load capacity 1050 kg / castor set	A	136,–	15,–	151,–
3S 300, hot-dip galvanized	A	1342,–	327,–	1669,–
Lid, galvanized	A	174,–	18,–	192,–
Castor Set, polyamide, Load capacity 1050 kg / castor set	A	136,–	15,–	151,–
3S 600, painted	A	1300,–	327,–	1627,–
Lid, galvanized	A	196,–	22,–	218,–
Castor Set, polyamide, Load capacity 1050 kg / castor set	A	136,–	15,–	151,–
3S 600, hot-dip galvanized	A	1402,–	327,–	1729,–
Lid, galvanized	A	196,–	22,–	218,–
Castor Set, polyamide, Load capacity 1050 kg / castor set	A	136,–	15,–	151,–

Automatic Tilting Container Type 4A	Category	Price	Freight charges	Price including freight charges
4A 600, painted	A	1103,–	225,–	1328,–
Lid, galvanized	A	196,–	22,–	218,–
Skip Body Welded Oil and Watertight	A	78,–	0,–	78,–
4A 600, hot-dip galvanized	A	1250,–	225,–	1475,–
Lid, galvanized	A	196,–	22,–	218,–
Skip Body Welded Oil and Watertight	A	78,–	0,–	78,–
4A 900, painted	A	1239,–	327,–	1566,–
Lid, galvanized	A	223,–	27,–	250,–
Skip Body Welded Oil and Watertight	A	78,–	0,–	78,–
4A 900, hot-dip galvanized	A	1424,–	327,–	1751,–
Lid, galvanized	A	223,–	27,–	250,–
Skip Body Welded Oil and Watertight	A	78,–	0,–	78,–
4A 1200, painted	A	1327,–	327,–	1654,–
Lid, galvanized	A	223,–	26,–	249,–
Skip Body Welded Oil and Watertight	A	121,–	0,–	121,–
4A 1200, hot-dip galvanized	A	1558,–	327,–	1885,–
Lid, galvanized	A	223,–	26,–	249,–
Skip Body Welded Oil and Watertight	A	121,–	0,–	121,–

Drum Gripper Type 4P	Category	Price	Freight charges	Price including freight charges
4P, painted	B	578,–	60,–	638,–
4P, hot-dip galvanized	B	551,–	60,–	611,–

Prices in EUR, valid EXW DE-46354 Südlohn, DE-38820 Halberstadt, unpacked
Freight charges valid CPT Portugal, islands and oversea territories excluded

BAUER GmbH
Eichendorffstr. 62
46354 Südlohn, Germany

Tel. +49 2862 70 90
info@bauer-suedlohn.com
www.bauer-suedlohn.com

Geschäftsführer
Patrick Bauer, Pascal Bauer
Amtsgericht Coesfeld HRB 5259

TÜVNORD
TÜV NORD CERT GmbH
DIN EN ISO 9001
tuev-nord.de

Price List 0726 en-PT
Forklift Truck Attachments

Drum Gripper Type 4P-D	Category	Price	Freight charges	Price including freight charges
4P-D120, painted	B	578,–	60,–	638,–
4P-D120, hot-dip galvanized	B	551,–	60,–	611,–
4P-D220, painted	B	578,–	60,–	638,–
4P-D220, hot-dip galvanized	B	551,–	60,–	611,–

Tilting Container Type AK	Category	Price	Freight charges	Price including freight charges
AK 50, painted	A	802,–	225,–	1027,–
Lid, galvanized	A	140,–	16,–	156,–
Castor Set, polyamide, Load capacity 1050 kg / castor set	A	136,–	15,–	151,–
Skip Body Welded Oil and Watertight	A	78,–	0,–	78,–
AK 50, hot-dip galvanized	A	956,–	225,–	1181,–
Lid, galvanized	A	140,–	16,–	156,–
Castor Set, polyamide, Load capacity 1050 kg / castor set	A	136,–	15,–	151,–
Skip Body Welded Oil and Watertight	A	78,–	0,–	78,–
AK 75, painted	A	897,–	225,–	1122,–
Lid, galvanized	A	192,–	21,–	213,–
Castor Set, polyamide, Load capacity 1050 kg / castor set	A	136,–	15,–	151,–
Skip Body Welded Oil and Watertight	A	78,–	0,–	78,–
AK 75, hot-dip galvanized	A	1048,–	327,–	1375,–
Lid, galvanized	A	192,–	21,–	213,–
Castor Set, polyamide, Load capacity 1050 kg / castor set	A	136,–	15,–	151,–
Skip Body Welded Oil and Watertight	A	78,–	0,–	78,–
AK 100, painted	A	970,–	327,–	1297,–
Lid, galvanized	A	218,–	26,–	244,–
Castor Set, polyamide, Load capacity 1050 kg / castor set	A	136,–	15,–	151,–
Skip Body Welded Oil and Watertight	A	121,–	0,–	121,–
AK 100, hot-dip galvanized	A	1133,–	327,–	1460,–
Lid, galvanized	A	218,–	26,–	244,–
Castor Set, polyamide, Load capacity 1050 kg / castor set	A	136,–	15,–	151,–
Skip Body Welded Oil and Watertight	A	121,–	0,–	121,–
AK 150, painted	A	1238,–	327,–	1565,–
Lid, galvanized	A	305,–	28,–	333,–
Castor Set, polyamide, Load capacity 1050 kg / castor set	A	136,–	15,–	151,–
Skip Body Welded Oil and Watertight	A	121,–	0,–	121,–
AK 150, hot-dip galvanized	A	1448,–	327,–	1775,–
Lid, galvanized	A	305,–	28,–	333,–
Castor Set, polyamide, Load capacity 1050 kg / castor set	A	136,–	15,–	151,–
Skip Body Welded Oil and Watertight	A	121,–	0,–	121,–

Container for Building Materials Type BBG	Category	Price	Freight charges	Price including freight charges
BBG 100, painted	A	405,–	225,–	630,–
Lid, galvanized	A	189,–	141,–	330,–
BBG 100, hot-dip galvanized	A	496,–	225,–	721,–
Lid, galvanized	A	189,–	141,–	330,–

Prices in EUR, valid EXW DE-46354 Südlohn, DE-38820 Halberstadt, unpacked
Freight charges valid CPT Portugal, islands and oversea territories excluded

BAUER GmbH
Eichendorffstr. 62
46354 Südlohn, Germany

Tel. +49 2862 70 90
info@bauer-suedlohn.com
www.bauer-suedlohn.com

Geschäftsführer
Patrick Bauer, Pascal Bauer
Amtsgericht Coesfeld HRB 5259

TÜVNORD
TÜV NORD CERT GmbH
DIN EN ISO 9001
tuev-nord.de

Price List 0726 en-PT
Forklift Truck Attachments

Container for Building Materials Type BBK	Category	Price	Freight charges	Price including freight charges
BBK 100, painted	A	496,–	225,–	721,–
Lid, galvanized	A	189,–	141,–	330,–
BBK 100, hot-dip galvanized	A	571,–	225,–	796,–
Lid, galvanized	A	189,–	141,–	330,–

Material Container Type BBM	Category	Price	Freight charges	Price including freight charges
BBM 500, painted	A	325,–	141,–	466,–
BBM 500, hot-dip galvanized	A	359,–	141,–	500,–

Container for Building Materials Type BBP	Category	Price	Freight charges	Price including freight charges
BBP 100, painted	A	433,–	141,–	574,–
Lid, galvanized	A	189,–	141,–	330,–
Pick-up cones (pins) and angle iron traverse lock	A	51,–	10,–	61,–
BBP 100, hot-dip galvanized	A	511,–	141,–	652,–
Lid, galvanized	A	189,–	141,–	330,–
Pick-up cones (pins) and angle iron traverse lock	A	51,–	10,–	61,–

Tilting Traverse for Containers for Building Material Containers Type BBT	Category	Price	Freight charges	Price including freight charges
BBT, painted	A	571,–	225,–	796,–
BBT, hot-dip galvanized	A	649,–	225,–	874,–

Building Materials Container Type BC	Category	Price	Freight charges	Price including freight charges
BC 500, painted	B	957,–	225,–	1182,–
Lid, galvanized	B	143,–	16,–	159,–
Castor Set, polyamide, Load capacity 1350 kg / castor set	A	192,–	15,–	207,–
BC 500, hot-dip galvanized	B	1179,–	327,–	1506,–
Lid, galvanized	B	143,–	16,–	159,–
Castor Set, polyamide, Load capacity 1350 kg / castor set	A	192,–	15,–	207,–
BC 500 (brick clamp operated), painted	B	1026,–	225,–	1251,–
Lid, galvanized	B	143,–	16,–	159,–
Castor Set, polyamide, Load capacity 1350 kg / castor set	A	192,–	15,–	207,–
BC 500 (brick clamp operated), hot-dip galvanized	B	1250,–	327,–	1577,–
Lid, galvanized	B	143,–	16,–	159,–
Castor Set, polyamide, Load capacity 1350 kg / castor set	A	192,–	15,–	207,–
BC 1000, painted	B	1043,–	327,–	1370,–
Lid, galvanized	B	143,–	16,–	159,–
Castor Set, polyamide, Load capacity 1350 kg / castor set	A	192,–	15,–	207,–
BC 1000, hot-dip galvanized	B	1316,–	327,–	1643,–
Lid, galvanized	B	143,–	16,–	159,–
Castor Set, polyamide, Load capacity 1350 kg / castor set	A	192,–	15,–	207,–
BC 1000 (brick clamp operated), painted	B	1111,–	327,–	1438,–
Lid, galvanized	B	143,–	16,–	159,–
Castor Set, polyamide, Load capacity 1350 kg / castor set	A	192,–	15,–	207,–
BC 1000 (brick clamp operated), hot-dip galvanized	B	1386,–	327,–	1713,–
Lid, galvanized	B	143,–	16,–	159,–

Prices in EUR, valid EXW DE-46354 Südlohn, DE-38820 Halberstadt, unpacked
Freight charges valid CPT Portugal, islands and oversea territories excluded

BAUER GmbH
Eichendorffstr. 62
46354 Südlohn, Germany

Tel. +49 2862 70 90
info@bauer-suedlohn.com
www.bauer-suedlohn.com

Geschäftsführer
Patrick Bauer, Pascal Bauer
Amtsgericht Coesfeld HRB 5259

TÜVNORD
TÜV NORD CERT GmbH
DIN EN ISO 9001
tuev-nord.de

Price List 0726 en-PT
Forklift Truck Attachments

Building Materials Container Type BC	Category	Price	Freight charges	Price including freight charges
Castor Set, polyamide, Load capacity 1350 kg / castor set	A	192,–	15,–	207,–

Tilting Container Type BK	Category	Price	Freight charges	Price including freight charges
BK 30, painted	A	700,–	225,–	925,–
Lid, galvanized	A	98,–	18,–	116,–
Castor Set, polyamide, Load capacity 1350 kg / castor set	A	192,–	15,–	207,–
Heavy-duty Castor Set, polyamide, Load capacity 2550 kg / castor set	A	379,–	15,–	394,–
Skip Body Welded Oil and Watertight	A	78,–	0,–	78,–
BK 30, hot-dip galvanized	A	984,–	225,–	1209,–
Lid, galvanized	A	98,–	18,–	116,–
Castor Set, polyamide, Load capacity 1350 kg / castor set	A	192,–	15,–	207,–
Heavy-duty Castor Set, polyamide, Load capacity 2550 kg / castor set	A	379,–	15,–	394,–
Skip Body Welded Oil and Watertight	A	78,–	0,–	78,–
BK 50, painted	A	984,–	225,–	1209,–
Lid, galvanized	A	98,–	20,–	118,–
Castor Set, polyamide, Load capacity 1350 kg / castor set	A	192,–	15,–	207,–
Heavy-duty Castor Set, polyamide, Load capacity 2550 kg / castor set	A	379,–	15,–	394,–
Skip Body Welded Oil and Watertight	A	78,–	0,–	78,–
BK 50, hot-dip galvanized	A	1327,–	327,–	1654,–
Lid, galvanized	A	98,–	20,–	118,–
Castor Set, polyamide, Load capacity 1350 kg / castor set	A	192,–	15,–	207,–
Heavy-duty Castor Set, polyamide, Load capacity 2550 kg / castor set	A	379,–	15,–	394,–
Skip Body Welded Oil and Watertight	A	78,–	0,–	78,–
BK 80, painted	A	1297,–	327,–	1624,–
Lid, galvanized	A	144,–	22,–	166,–
Castor Set, polyamide, Load capacity 1350 kg / castor set	A	192,–	15,–	207,–
Heavy-duty Castor Set, polyamide, Load capacity 2550 kg / castor set	A	379,–	15,–	394,–
Skip Body Welded Oil and Watertight	A	78,–	0,–	78,–
BK 80, hot-dip galvanized	A	1814,–	327,–	2141,–
Lid, galvanized	A	144,–	22,–	166,–
Castor Set, polyamide, Load capacity 1350 kg / castor set	A	192,–	15,–	207,–
Heavy-duty Castor Set, polyamide, Load capacity 2550 kg / castor set	A	379,–	15,–	394,–
Skip Body Welded Oil and Watertight	A	78,–	0,–	78,–
BK 100, painted	A	1508,–	327,–	1835,–
Lid, galvanized	A	173,–	27,–	200,–
Castor Set, polyamide, Load capacity 1350 kg / castor set	A	192,–	15,–	207,–
Heavy-duty Castor Set, polyamide, Load capacity 2550 kg / castor set	A	379,–	15,–	394,–
Skip Body Welded Oil and Watertight	A	121,–	0,–	121,–
BK 100, hot-dip galvanized	A	2070,–	327,–	2397,–
Lid, galvanized	A	173,–	27,–	200,–
Castor Set, polyamide, Load capacity 1350 kg / castor set	A	192,–	15,–	207,–
Heavy-duty Castor Set, polyamide, Load capacity 2550 kg / castor set	A	379,–	15,–	394,–
Skip Body Welded Oil and Watertight	A	121,–	0,–	121,–
BK 120, painted	A	1640,–	327,–	1967,–
Lid, galvanized	A	184,–	32,–	216,–
Castor Set, polyamide, Load capacity 1350 kg / castor set	A	192,–	15,–	207,–

Prices in EUR, valid EXW DE-46354 Südlohn, DE-38820 Halberstadt, unpacked
Freight charges valid CPT Portugal, islands and oversea territories excluded

BAUER GmbH
Eichendorffstr. 62
46354 Südlohn, Germany

Tel. +49 2862 70 90
info@bauer-suedlohn.com
www.bauer-suedlohn.com

Geschäftsführer
Patrick Bauer, Pascal Bauer
Amtsgericht Coesfeld HRB 5259

TÜVNORD
TÜV NORD CERT GmbH
DIN EN ISO 9001
tuev-nord.de

Price List 0726 en-PT
Forklift Truck Attachments

Tilting Container Type BK	Category	Price	Freight charges	Price including freight charges
Heavy-duty Castor Set, polyamide, Load capacity 2550 kg / castor set	A	379,–	15,–	394,–
Skip Body Welded Oil and Watertight	A	121,–	0,–	121,–
BK 120, hot-dip galvanized	A	2235,–	327,–	2562,–
Lid, galvanized	A	184,–	32,–	216,–
Castor Set, polyamide, Load capacity 1350 kg / castor set	A	192,–	15,–	207,–
Heavy-duty Castor Set, polyamide, Load capacity 2550 kg / castor set	A	379,–	15,–	394,–
Skip Body Welded Oil and Watertight	A	121,–	0,–	121,–
BK 150, painted	A	1801,–	398,–	2199,–
Lid, galvanized	A	211,–	39,–	250,–
Castor Set, polyamide, Load capacity 1350 kg / castor set	A	192,–	15,–	207,–
Heavy-duty Castor Set, polyamide, Load capacity 2550 kg / castor set	A	379,–	15,–	394,–
Skip Body Welded Oil and Watertight	A	121,–	0,–	121,–
BK 150, hot-dip galvanized	A	2444,–	398,–	2842,–
Lid, galvanized	A	211,–	39,–	250,–
Castor Set, polyamide, Load capacity 1350 kg / castor set	A	192,–	15,–	207,–
Heavy-duty Castor Set, polyamide, Load capacity 2550 kg / castor set	A	379,–	15,–	394,–
Skip Body Welded Oil and Watertight	A	121,–	0,–	121,–
BK 200, painted	A	2240,–	398,–	2638,–
Lid, galvanized	A	223,–	141,–	364,–
Castor Set, polyamide, Load capacity 1350 kg / castor set	A	192,–	15,–	207,–
Heavy-duty Castor Set, polyamide, Load capacity 2550 kg / castor set	A	379,–	15,–	394,–
Skip Body Welded Oil and Watertight	A	121,–	0,–	121,–
BK 200, hot-dip galvanized	A	3052,–	567,–	3619,–
Lid, galvanized	A	223,–	141,–	364,–
Castor Set, polyamide, Load capacity 1350 kg / castor set	A	192,–	15,–	207,–
Heavy-duty Castor Set, polyamide, Load capacity 2550 kg / castor set	A	379,–	15,–	394,–
Skip Body Welded Oil and Watertight	A	121,–	0,–	121,–

Container With Drop Away Base Type BKB	Category	Price	Freight charges	Price including freight charges
BKB 500, painted	A	763,–	225,–	988,–
Lid, galvanized	A	196,–	18,–	214,–
Castor Set, polyamide, Load capacity 1350 kg / castor set	A	192,–	15,–	207,–
BKB 500, hot-dip galvanized	A	907,–	225,–	1132,–
Lid, galvanized	A	196,–	18,–	214,–
Castor Set, polyamide, Load capacity 1350 kg / castor set	A	192,–	15,–	207,–
BKB 700, painted	A	816,–	225,–	1041,–
Lid, galvanized	A	196,–	18,–	214,–
Castor Set, polyamide, Load capacity 1350 kg / castor set	A	192,–	15,–	207,–
BKB 700, hot-dip galvanized	A	960,–	225,–	1185,–
Lid, galvanized	A	196,–	18,–	214,–
Castor Set, polyamide, Load capacity 1350 kg / castor set	A	192,–	15,–	207,–
BKB 1000, painted	A	865,–	225,–	1090,–
Lid, galvanized	A	196,–	18,–	214,–
Castor Set, polyamide, Load capacity 1350 kg / castor set	A	192,–	15,–	207,–
BKB 1000, hot-dip galvanized	A	1029,–	225,–	1254,–
Lid, galvanized	A	196,–	18,–	214,–

Prices in EUR, valid EXW DE-46354 Südlohn, DE-38820 Halberstadt, unpacked
Freight charges valid CPT Portugal, islands and oversea territories excluded

BAUER GmbH
Eichendorffstr. 62
46354 Südlohn, Germany

Tel. +49 2862 70 90
info@bauer-suedlohn.com
www.bauer-suedlohn.com

Geschäftsführer
Patrick Bauer, Pascal Bauer
Amtsgericht Coesfeld HRB 5259

TÜVNORD
TÜV NORD CERT GmbH
DIN EN ISO 9001
tuev-nord.de

Price List 0726 en-PT
Forklift Truck Attachments

Container With Drop Away Base Type BKB	Category	Price	Freight charges	Price including freight charges
Castor Set, polyamide, Load capacity 1350 kg / castor set	A	192,–	15,–	207,–

Tilting Container Type BKC	Category	Price	Freight charges	Price including freight charges
BKC 200, painted	A	2308,–	567,–	2875,–
Lid, galvanized	A	450,–	141,–	591,–
Skip Body Welded Oil and Watertight	A	121,–	0,–	121,–
BKC 200, hot-dip galvanized	A	3089,–	567,–	3656,–
Lid, galvanized	A	450,–	141,–	591,–
Skip Body Welded Oil and Watertight	A	121,–	0,–	121,–
BKC 300, painted	A	2558,–	567,–	3125,–
Lid, galvanized	A	450,–	141,–	591,–
Skip Body Welded Oil and Watertight	A	121,–	0,–	121,–
BKC 300, hot-dip galvanized	A	3367,–	567,–	3934,–
Lid, galvanized	A	450,–	141,–	591,–
Skip Body Welded Oil and Watertight	A	121,–	0,–	121,–
BKC 400, painted	A	3150,–	567,–	3717,–
Lid, galvanized	A	450,–	225,–	675,–
Skip Body Welded Oil and Watertight	A	121,–	0,–	121,–
BKC 400, hot-dip galvanized	A	4067,–	731,–	4798,–
Lid, galvanized	A	450,–	225,–	675,–
Skip Body Welded Oil and Watertight	A	121,–	0,–	121,–
BKC 500, painted	A	3659,–	731,–	4390,–
Lid, galvanized	A	450,–	225,–	675,–
Skip Body Welded Oil and Watertight	A	121,–	0,–	121,–
BKC 500, hot-dip galvanized	A	4641,–	731,–	5372,–
Lid, galvanized	A	450,–	225,–	675,–
Skip Body Welded Oil and Watertight	A	121,–	0,–	121,–

Tilting Container Type BKC-H	Category	Price	Freight charges	Price including freight charges
BKC-H 200, painted	A	3422,–	567,–	3989,–
Lid, galvanized	A	450,–	141,–	591,–
Skip Body Welded Oil and Watertight	A	121,–	0,–	121,–
BKC-H 200, hot-dip galvanized	A	4204,–	567,–	4771,–
Lid, galvanized	A	450,–	141,–	591,–
Skip Body Welded Oil and Watertight	A	121,–	0,–	121,–
BKC-H 300, painted	A	3673,–	567,–	4240,–
Lid, galvanized	A	450,–	141,–	591,–
Skip Body Welded Oil and Watertight	A	121,–	0,–	121,–
BKC-H 300, hot-dip galvanized	A	4483,–	567,–	5050,–
Lid, galvanized	A	450,–	141,–	591,–
Skip Body Welded Oil and Watertight	A	121,–	0,–	121,–
BKC-H 400, painted	A	4265,–	567,–	4832,–
Lid, galvanized	A	450,–	225,–	675,–
Skip Body Welded Oil and Watertight	A	121,–	0,–	121,–
BKC-H 400, hot-dip galvanized	A	5182,–	731,–	5913,–

Prices in EUR, valid EXW DE-46354 Südlohn, DE-38820 Halberstadt, unpacked
Freight charges valid CPT Portugal, islands and oversea territories excluded

BAUER GmbH
Eichendorffstr. 62
46354 Südlohn, Germany

Tel. +49 2862 70 90
info@bauer-suedlohn.com
www.bauer-suedlohn.com

Geschäftsführer
Patrick Bauer, Pascal Bauer
Amtsgericht Coesfeld HRB 5259

TÜVNORD
TÜV NORD CERT GmbH
DIN EN ISO 9001
tuev-nord.de

Price List 0726 en-PT
Forklift Truck Attachments

Tilting Container Type BKC-H	Category	Price	Freight charges	Price including freight charges
Lid, galvanized	A	450,–	225,–	675,–
Skip Body Welded Oil and Watertight	A	121,–	0,–	121,–
BKC-H 500, painted	A	4774,–	731,–	5505,–
Lid, galvanized	A	450,–	225,–	675,–
Skip Body Welded Oil and Watertight	A	121,–	0,–	121,–
BKC-H 500, hot-dip galvanized	A	5756,–	731,–	6487,–
Lid, galvanized	A	450,–	225,–	675,–
Skip Body Welded Oil and Watertight	A	121,–	0,–	121,–

Tilting Container Type BKM	Category	Price	Freight charges	Price including freight charges
BKM 30, painted	A	700,–	225,–	925,–
Lid, galvanized	A	104,–	18,–	122,–
Castor Set, polyamide, Load capacity 1350 kg / castor set	A	192,–	15,–	207,–
Heavy-duty Castor Set, polyamide, Load capacity 2550 kg / castor set	A	379,–	15,–	394,–
Skip Body Welded Oil and Watertight	A	78,–	0,–	78,–
BKM 30, hot-dip galvanized	A	984,–	225,–	1209,–
Lid, galvanized	A	104,–	18,–	122,–
Castor Set, polyamide, Load capacity 1350 kg / castor set	A	192,–	15,–	207,–
Heavy-duty Castor Set, polyamide, Load capacity 2550 kg / castor set	A	379,–	15,–	394,–
Skip Body Welded Oil and Watertight	A	78,–	0,–	78,–
BKM 50, painted	A	984,–	225,–	1209,–
Lid, galvanized	A	130,–	21,–	151,–
Castor Set, polyamide, Load capacity 1350 kg / castor set	A	192,–	15,–	207,–
Heavy-duty Castor Set, polyamide, Load capacity 2550 kg / castor set	A	379,–	15,–	394,–
Skip Body Welded Oil and Watertight	A	78,–	0,–	78,–
BKM 50, hot-dip galvanized	A	1327,–	225,–	1552,–
Lid, galvanized	A	130,–	21,–	151,–
Castor Set, polyamide, Load capacity 1350 kg / castor set	A	192,–	15,–	207,–
Heavy-duty Castor Set, polyamide, Load capacity 2550 kg / castor set	A	379,–	15,–	394,–
Skip Body Welded Oil and Watertight	A	78,–	0,–	78,–
BKM 75, painted	A	1246,–	327,–	1573,–
Lid, galvanized	A	142,–	22,–	164,–
Castor Set, polyamide, Load capacity 1350 kg / castor set	A	192,–	15,–	207,–
Heavy-duty Castor Set, polyamide, Load capacity 2550 kg / castor set	A	379,–	15,–	394,–
Skip Body Welded Oil and Watertight	A	78,–	0,–	78,–
BKM 75, hot-dip galvanized	A	1672,–	327,–	1999,–
Lid, galvanized	A	142,–	22,–	164,–
Castor Set, polyamide, Load capacity 1350 kg / castor set	A	192,–	15,–	207,–
Heavy-duty Castor Set, polyamide, Load capacity 2550 kg / castor set	A	379,–	15,–	394,–
Skip Body Welded Oil and Watertight	A	78,–	0,–	78,–
BKM 100, painted	A	1508,–	327,–	1835,–
Lid, galvanized	A	185,–	27,–	212,–
Castor Set, polyamide, Load capacity 1350 kg / castor set	A	192,–	15,–	207,–
Heavy-duty Castor Set, polyamide, Load capacity 2550 kg / castor set	A	379,–	15,–	394,–
Skip Body Welded Oil and Watertight	A	121,–	0,–	121,–
BKM 100, hot-dip galvanized	A	2070,–	327,–	2397,–

Prices in EUR, valid EXW DE-46354 Südlohn, DE-38820 Halberstadt, unpacked
Freight charges valid CPT Portugal, islands and oversea territories excluded

BAUER GmbH
Eichendorffstr. 62
46354 Südlohn, Germany

Tel. +49 2862 70 90
info@bauer-suedlohn.com
www.bauer-suedlohn.com

Geschäftsführer
Patrick Bauer, Pascal Bauer
Amtsgericht Coesfeld HRB 5259

TÜVNORD
TÜV NORD CERT GmbH
DIN EN ISO 9001
tuev-nord.de

Price List 0726 en-PT
Forklift Truck Attachments

Tilting Container Type BKM	Category	Price	Freight charges	Price including freight charges
Lid, galvanized	A	185,–	27,–	212,–
Castor Set, polyamide, Load capacity 1350 kg / castor set	A	192,–	15,–	207,–
Heavy-duty Castor Set, polyamide, Load capacity 2550 kg / castor set	A	379,–	15,–	394,–
Skip Body Welded Oil and Watertight	A	121,–	0,–	121,–
BKM 150, painted	A	1801,–	398,–	2199,–
Lid, galvanized	A	271,–	36,–	307,–
Castor Set, polyamide, Load capacity 1350 kg / castor set	A	192,–	15,–	207,–
Heavy-duty Castor Set, polyamide, Load capacity 2550 kg / castor set	A	379,–	15,–	394,–
Skip Body Welded Oil and Watertight	A	121,–	0,–	121,–
BKM 150, hot-dip galvanized	A	2444,–	398,–	2842,–
Lid, galvanized	A	271,–	36,–	307,–
Castor Set, polyamide, Load capacity 1350 kg / castor set	A	192,–	15,–	207,–
Heavy-duty Castor Set, polyamide, Load capacity 2550 kg / castor set	A	379,–	15,–	394,–
Skip Body Welded Oil and Watertight	A	121,–	0,–	121,–
BKM 200, painted	A	2240,–	398,–	2638,–
Lid, galvanized	A	302,–	141,–	443,–
Castor Set, polyamide, Load capacity 1350 kg / castor set	A	192,–	15,–	207,–
Heavy-duty Castor Set, polyamide, Load capacity 2550 kg / castor set	A	379,–	15,–	394,–
Skip Body Welded Oil and Watertight	A	121,–	0,–	121,–
Lid, galvanized	A	302,–	141,–	443,–
Castor Set, polyamide, Load capacity 1350 kg / castor set	A	192,–	15,–	207,–
Heavy-duty Castor Set, polyamide, Load capacity 2550 kg / castor set	A	379,–	15,–	394,–
Skip Body Welded Oil and Watertight	A	121,–	0,–	121,–

Traverse For Stacking Tippers Type BKT	Category	Price	Freight charges	Price including freight charges
BKT 30, painted	A	368,–	225,–	593,–
Traverse Stand Type TS, hot-dip galvanized	A	78,–	8,–	86,–
BKT 55, painted	A	390,–	225,–	615,–
Traverse Stand Type TS, hot-dip galvanized	A	78,–	9,–	87,–
BKT 70, painted	A	390,–	225,–	615,–
Traverse Stand Type TS, hot-dip galvanized	A	78,–	9,–	87,–
BKT 90, painted	A	392,–	225,–	617,–
Traverse Stand Type TS, hot-dip galvanized	A	78,–	9,–	87,–
BKT 150, painted	A	631,–	225,–	856,–
Traverse Stand Type TS, hot-dip galvanized	A	78,–	9,–	87,–
BKT 200, painted	A	696,–	225,–	921,–
Traverse Stand Type TS, hot-dip galvanized	A	78,–	9,–	87,–

Shovel Type BSE	Category	Price	Freight charges	Price including freight charges
BSE 50, painted	A	1486,–	327,–	1813,–
BSE 75, painted	A	1769,–	327,–	2096,–
BSE 100, painted	A	2219,–	398,–	2617,–
BSE 150, painted	A	2507,–	398,–	2905,–
BSE 200, painted	A	2786,–	567,–	3353,–
BSE 250, painted	A	3433,–	620,–	4053,–

Prices in EUR, valid EXW DE-46354 Südlohn, DE-38820 Halberstadt, unpacked
Freight charges valid CPT Portugal, islands and oversea territories excluded

BAUER GmbH
Eichendorffstr. 62
46354 Südlohn, Germany

Tel. +49 2862 70 90
info@bauer-suedlohn.com
www.bauer-suedlohn.com

Geschäftsführer
Patrick Bauer, Pascal Bauer
Amtsgericht Coesfeld HRB 5259

TÜVNORD
TÜV NORD CERT GmbH
DIN EN ISO 9001
tuev-nord.de

Price List 0726 en-PT
Forklift Truck Attachments

Shovel Type BSI	Category	Price	Freight charges	Price including freight charges
BSI 50, painted	A	1257,–	225,–	1482,–
BSI 75, painted	A	1424,–	327,–	1751,–
BSI 100, painted	A	1786,–	327,–	2113,–

Stacking Tipper Type BSK	Category	Price	Freight charges	Price including freight charges
BSK 30, painted	A	265,–	141,–	406,–
Lid, galvanized	A	69,–	12,–	81,–
Castor Set, polyamide, Load capacity 1350 kg / castor set	A	192,–	15,–	207,–
Skip Body Welded Oil and Watertight	A	78,–	0,–	78,–
Set of 5 self-adhesive stickers with symbols for: glass, paper, plastic, metal, residual waste	A	29,–	on request	on request
BSK 30, hot-dip galvanized	A	320,–	141,–	461,–
Lid, galvanized	A	69,–	12,–	81,–
Castor Set, polyamide, Load capacity 1350 kg / castor set	A	192,–	15,–	207,–
Skip Body Welded Oil and Watertight	A	78,–	0,–	78,–
Set of 5 self-adhesive stickers with symbols for: glass, paper, plastic, metal, residual waste	A	29,–	on request	on request
BSK 55, painted	A	332,–	141,–	473,–
Lid, galvanized	A	98,–	15,–	113,–
Castor Set, polyamide, Load capacity 1350 kg / castor set	A	192,–	15,–	207,–
Skip Body Welded Oil and Watertight	A	78,–	0,–	78,–
Set of 5 self-adhesive stickers with symbols for: glass, paper, plastic, metal, residual waste	A	29,–	on request	on request
BSK 55, hot-dip galvanized	A	405,–	141,–	546,–
Lid, galvanized	A	98,–	15,–	113,–
Castor Set, polyamide, Load capacity 1350 kg / castor set	A	192,–	15,–	207,–
Skip Body Welded Oil and Watertight	A	78,–	0,–	78,–
Set of 5 self-adhesive stickers with symbols for: glass, paper, plastic, metal, residual waste	A	29,–	on request	on request
BSK 70, painted	A	352,–	141,–	493,–
Lid, galvanized	A	122,–	15,–	137,–
Castor Set, polyamide, Load capacity 1350 kg / castor set	A	192,–	15,–	207,–
Skip Body Welded Oil and Watertight	A	78,–	0,–	78,–
Set of 5 self-adhesive stickers with symbols for: glass, paper, plastic, metal, residual waste	A	29,–	on request	on request
BSK 70, hot-dip galvanized	A	457,–	141,–	598,–
Lid, galvanized	A	122,–	15,–	137,–
Castor Set, polyamide, Load capacity 1350 kg / castor set	A	192,–	15,–	207,–
Skip Body Welded Oil and Watertight	A	78,–	0,–	78,–
Set of 5 self-adhesive stickers with symbols for: glass, paper, plastic, metal, residual waste	A	29,–	on request	on request
BSK 90, painted	A	379,–	141,–	520,–
Lid, galvanized	A	166,–	18,–	184,–
Castor Set, polyamide, Load capacity 1350 kg / castor set	A	192,–	15,–	207,–
Skip Body Welded Oil and Watertight	A	78,–	0,–	78,–
Set of 5 self-adhesive stickers with symbols for: glass, paper, plastic, metal, residual waste	A	29,–	on request	on request
BSK 90, hot-dip galvanized	A	487,–	225,–	712,–
Lid, galvanized	A	166,–	18,–	184,–
Castor Set, polyamide, Load capacity 1350 kg / castor set	A	192,–	15,–	207,–
Skip Body Welded Oil and Watertight	A	78,–	0,–	78,–
Set of 5 self-adhesive stickers with symbols for: glass, paper, plastic, metal, residual waste	A	29,–	on request	on request
BSK 150, painted	A	871,–	225,–	1096,–

Prices in EUR, valid EXW DE-46354 Südlohn, DE-38820 Halberstadt, unpacked
Freight charges valid CPT Portugal, islands and oversea territories excluded

BAUER GmbH
Eichendorffstr. 62
46354 Südlohn, Germany

Tel. +49 2862 70 90
info@bauer-suedlohn.com
www.bauer-suedlohn.com

Geschäftsführer
Patrick Bauer, Pascal Bauer
Amtsgericht Coesfeld HRB 5259

TÜVNORD
TÜV NORD CERT GmbH
DIN EN ISO 9001
tuev-nord.de

Price List 0726 en-PT
Forklift Truck Attachments

Stacking Tipper Type BSK	Category	Price	Freight charges	Price including freight charges
Lid, galvanized	A	223,–	21,–	244,–
Castor Set, polyamide, Load capacity 1350 kg / castor set	A	192,–	15,–	207,–
Skip Body Welded Oil and Watertight	A	121,–	0,–	121,–
Set of 5 self-adhesive stickers with symbols for: glass, paper, plastic, metal, residual waste	A	29,–	on request	on request
BSK 150, hot-dip galvanized	A	1019,–	225,–	1244,–
Lid, galvanized	A	223,–	21,–	244,–
Castor Set, polyamide, Load capacity 1350 kg / castor set	A	192,–	15,–	207,–
Skip Body Welded Oil and Watertight	A	121,–	0,–	121,–
Set of 5 self-adhesive stickers with symbols for: glass, paper, plastic, metal, residual waste	A	29,–	on request	on request
BSK 200, painted	A	934,–	225,–	1159,–
Lid, galvanized	A	284,–	26,–	310,–
Castor Set, polyamide, Load capacity 1350 kg / castor set	A	192,–	15,–	207,–
Skip Body Welded Oil and Watertight	A	121,–	0,–	121,–
Set of 5 self-adhesive stickers with symbols for: glass, paper, plastic, metal, residual waste	A	29,–	on request	on request
BSK 200, hot-dip galvanized	A	1169,–	225,–	1394,–
Lid, galvanized	A	284,–	26,–	310,–
Castor Set, polyamide, Load capacity 1350 kg / castor set	A	192,–	15,–	207,–
Skip Body Welded Oil and Watertight	A	121,–	0,–	121,–
Set of 5 self-adhesive stickers with symbols for: glass, paper, plastic, metal, residual waste	A	29,–	on request	on request

Lattice Tilting Container Type BSK-G	Category	Price	Freight charges	Price including freight charges
BSK-G 90, painted	A	344,–	141,–	485,–
Lid, galvanized	A	166,–	18,–	184,–
Castor Set, polyamide, Load capacity 1350 kg / castor set	A	192,–	15,–	207,–
BSK-G 90, hot-dip galvanized	A	419,–	141,–	560,–
Lid, galvanized	A	166,–	18,–	184,–
Castor Set, polyamide, Load capacity 1350 kg / castor set	A	192,–	15,–	207,–

Swarf Stacking Tipper Type BSL	Category	Price	Freight charges	Price including freight charges
BSL 30, painted	A	590,–	141,–	731,–
Lid, galvanized	A	69,–	12,–	81,–
Castor Set, polyamide, Load capacity 1350 kg / castor set	A	192,–	15,–	207,–
BSL 30, hot-dip galvanized	A	679,–	141,–	820,–
Lid, galvanized	A	69,–	12,–	81,–
Castor Set, polyamide, Load capacity 1350 kg / castor set	A	192,–	15,–	207,–
BSL 55, painted	A	726,–	225,–	951,–
Lid, galvanized	A	98,–	15,–	113,–
Castor Set, polyamide, Load capacity 1350 kg / castor set	A	192,–	15,–	207,–
BSL 55, hot-dip galvanized	A	852,–	225,–	1077,–
Lid, galvanized	A	98,–	15,–	113,–
Castor Set, polyamide, Load capacity 1350 kg / castor set	A	192,–	15,–	207,–
BSL 70, painted	A	763,–	225,–	988,–
Lid, galvanized	A	122,–	15,–	137,–
Castor Set, polyamide, Load capacity 1350 kg / castor set	A	192,–	15,–	207,–
BSL 70, hot-dip galvanized	A	912,–	225,–	1137,–

Prices in EUR, valid EXW DE-46354 Südlohn, DE-38820 Halberstadt, unpacked
Freight charges valid CPT Portugal, islands and oversea territories excluded

BAUER GmbH
Eichendorffstr. 62
46354 Südlohn, Germany

Tel. +49 2862 70 90
info@bauer-suedlohn.com
www.bauer-suedlohn.com

Geschäftsführer
Patrick Bauer, Pascal Bauer
Amtsgericht Coesfeld HRB 5259

TÜVNORD
TÜV NORD CERT GmbH
DIN EN ISO 9001
tuev-nord.de

Price List 0726 en-PT
Forklift Truck Attachments

Swarf Stacking Tipper Type BSL	Category	Price	Freight charges	Price including freight charges
Lid, galvanized	A	122,–	15,–	137,–
Castor Set, polyamide, Load capacity 1350 kg / castor set	A	192,–	15,–	207,–
BSL 90, painted	A	830,–	225,–	1055,–
Lid, galvanized	A	166,–	18,–	184,–
Castor Set, polyamide, Load capacity 1350 kg / castor set	A	192,–	15,–	207,–
BSL 90, hot-dip galvanized	A	1004,–	225,–	1229,–
Lid, galvanized	A	166,–	18,–	184,–
Castor Set, polyamide, Load capacity 1350 kg / castor set	A	192,–	15,–	207,–
BSL 150, painted	A	1227,–	225,–	1452,–
Lid, galvanized	A	223,–	21,–	244,–
Castor Set, polyamide, Load capacity 1350 kg / castor set	A	192,–	15,–	207,–
BSL 150, hot-dip galvanized	A	1490,–	327,–	1817,–
Lid, galvanized	A	223,–	21,–	244,–
Castor Set, polyamide, Load capacity 1350 kg / castor set	A	192,–	15,–	207,–
BSL 200, painted	A	1327,–	327,–	1654,–
Lid, galvanized	A	284,–	26,–	310,–
Castor Set, polyamide, Load capacity 1350 kg / castor set	A	192,–	15,–	207,–
BSL 200, hot-dip galvanized	A	1792,–	327,–	2119,–
Lid, galvanized	A	284,–	26,–	310,–
Castor Set, polyamide, Load capacity 1350 kg / castor set	A	192,–	15,–	207,–

Shovel Type BSM	Category	Price	Freight charges	Price including freight charges
BSM 50, painted	A	1486,–	225,–	1711,–
BSM 75, painted	A	1769,–	327,–	2096,–
BSM 100, painted	A	2219,–	398,–	2617,–
BSM 150, painted	A	2507,–	398,–	2905,–
BSM 200, painted	A	2786,–	567,–	3353,–
BSM 250, painted	A	3433,–	620,–	4053,–

Swarf Stacking Tipper Type BSS	Category	Price	Freight charges	Price including freight charges
BSS 30, painted	A	422,–	141,–	563,–
Lid, galvanized	A	69,–	12,–	81,–
Castor Set, polyamide, Load capacity 1350 kg / castor set	A	192,–	15,–	207,–
BSS 30, hot-dip galvanized	A	490,–	141,–	631,–
Lid, galvanized	A	69,–	12,–	81,–
Castor Set, polyamide, Load capacity 1350 kg / castor set	A	192,–	15,–	207,–
BSS 55, painted	A	523,–	141,–	664,–
Lid, galvanized	A	98,–	15,–	113,–
Castor Set, polyamide, Load capacity 1350 kg / castor set	A	192,–	15,–	207,–
BSS 55, hot-dip galvanized	A	648,–	141,–	789,–
Lid, galvanized	A	98,–	15,–	113,–
Castor Set, polyamide, Load capacity 1350 kg / castor set	A	192,–	15,–	207,–
BSS 70, painted	A	561,–	141,–	702,–
Lid, galvanized	A	122,–	15,–	137,–
Castor Set, polyamide, Load capacity 1350 kg / castor set	A	192,–	15,–	207,–

Prices in EUR, valid EXW DE-46354 Südlohn, DE-38820 Halberstadt, unpacked
Freight charges valid CPT Portugal, islands and oversea territories excluded

BAUER GmbH
Eichendorffstr. 62
46354 Südlohn, Germany

Tel. +49 2862 70 90
info@bauer-suedlohn.com
www.bauer-suedlohn.com

Geschäftsführer
Patrick Bauer, Pascal Bauer
Amtsgericht Coesfeld HRB 5259

TÜVNORD
TÜV NORD CERT GmbH
DIN EN ISO 9001
tuev-nord.de

Price List 0726 en-PT
Forklift Truck Attachments

Swarf Stacking Tipper Type BSS	Category	Price	Freight charges	Price including freight charges
BSS 70, hot-dip galvanized	A	708,–	225,–	933,–
Lid, galvanized	A	122,–	15,–	137,–
Castor Set, polyamide, Load capacity 1350 kg / castor set	A	192,–	15,–	207,–
BSS 90, painted	A	597,–	225,–	822,–
Lid, galvanized	A	166,–	18,–	184,–
Castor Set, polyamide, Load capacity 1350 kg / castor set	A	192,–	15,–	207,–
BSS 90, hot-dip galvanized	A	765,–	225,–	990,–
Lid, galvanized	A	166,–	18,–	184,–
Castor Set, polyamide, Load capacity 1350 kg / castor set	A	192,–	15,–	207,–
BSS 150, painted	A	907,–	225,–	1132,–
Lid, galvanized	A	223,–	21,–	244,–
Castor Set, polyamide, Load capacity 1350 kg / castor set	A	192,–	15,–	207,–
BSS 150, hot-dip galvanized	A	1166,–	225,–	1391,–
Lid, galvanized	A	223,–	21,–	244,–
Castor Set, polyamide, Load capacity 1350 kg / castor set	A	192,–	15,–	207,–
BSS 200, painted	A	1024,–	225,–	1249,–
Lid, galvanized	A	284,–	26,–	310,–
Castor Set, polyamide, Load capacity 1350 kg / castor set	A	192,–	15,–	207,–
BSS 200, hot-dip galvanized	A	1371,–	327,–	1698,–
Lid, galvanized	A	284,–	26,–	310,–
Castor Set, polyamide, Load capacity 1350 kg / castor set	A	192,–	15,–	207,–

Traverse For Stacking Tippers Type BST	Category	Price	Freight charges	Price including freight charges
BST 30, painted	A	332,–	141,–	473,–
Traverse Stand Type TS, hot-dip galvanized	A	78,–	8,–	86,–
BST 55, painted	A	354,–	141,–	495,–
Traverse Stand Type TS, hot-dip galvanized	A	78,–	9,–	87,–
BST 70, painted	A	354,–	141,–	495,–
Traverse Stand Type TS, hot-dip galvanized	A	78,–	9,–	87,–
BST 90, painted	A	368,–	141,–	509,–
Traverse Stand Type TS, hot-dip galvanized	A	78,–	9,–	87,–
BST 150, painted	A	551,–	225,–	776,–
Traverse Stand Type TS, hot-dip galvanized	A	78,–	9,–	87,–
BST 200, painted	A	612,–	225,–	837,–
Traverse Stand Type TS, hot-dip galvanized	A	78,–	9,–	87,–

Traverse For Stacking Tippers Type BST-H	Category	Price	Freight charges	Price including freight charges
BST-H 30, painted	A	2127,–	225,–	2352,–
Traverse Stand Type TS, hot-dip galvanized	A	78,–	8,–	86,–
BST-H 55, painted	A	2257,–	225,–	2482,–
Traverse Stand Type TS, hot-dip galvanized	A	78,–	8,–	86,–
BST-H 70, painted	A	2257,–	225,–	2482,–
Traverse Stand Type TS, hot-dip galvanized	A	78,–	8,–	86,–
BST-H 90, painted	A	2374,–	225,–	2599,–
Traverse Stand Type TS, hot-dip galvanized	A	78,–	8,–	86,–

Prices in EUR, valid EXW DE-46354 Südlohn, DE-38820 Halberstadt, unpacked
Freight charges valid CPT Portugal, islands and oversea territories excluded

BAUER GmbH
Eichendorffstr. 62
46354 Südlohn, Germany

Tel. +49 2862 70 90
info@bauer-suedlohn.com
www.bauer-suedlohn.com

Geschäftsführer
Patrick Bauer, Pascal Bauer
Amtsgericht Coesfeld HRB 5259

TÜVNORD
TÜV NORD CERT GmbH
DIN EN ISO 9001
tuev-nord.de

Price List 0726 en-PT
Forklift Truck Attachments

Traverse For Stacking Tippers Type BST-H	Category	Price	Freight charges	Price including freight charges
BST-H 150, painted	A	2700,–	327,–	3027,–
Traverse Stand Type TS, hot-dip galvanized	A	78,–	9,–	87,–
BST-H 200, painted	A	2972,–	327,–	3299,–
Traverse Stand Type TS, hot-dip galvanized	A	78,–	9,–	87,–

Traverse For Stacking Tippers Type BST-U	Category	Price	Freight charges	Price including freight charges
BST-U 30, painted	A	956,–	225,–	1181,–
BST-U 55, painted	A	1020,–	225,–	1245,–
BST-U 70, painted	A	1020,–	225,–	1245,–
BST-U 90, painted	A	1047,–	225,–	1272,–

Beam Traverse Type BT	Category	Price	Freight charges	Price including freight charges
BT 3001, painted	A	1877,–	306,–	2183,–
Support frames, hot-dip galvanized	A	276,–	141,–	417,–
BT 3002, painted	A	2117,–	306,–	2423,–
Support frames, hot-dip galvanized	A	276,–	141,–	417,–
BT 3003, painted	A	2276,–	306,–	2582,–
Support frames, hot-dip galvanized	A	276,–	141,–	417,–
BT 3005, painted	A	2596,–	408,–	3004,–
Support frames, hot-dip galvanized	A	276,–	141,–	417,–

Filling Hopper Type BTM	Category	Price	Freight charges	Price including freight charges
BTM, painted	A	2461,–	398,–	2859,–

Filling Hopper Type BTS	Category	Price	Freight charges	Price including freight charges
BTS, painted	A	2107,–	398,–	2505,–

Bin Type C	Category	Price	Freight charges	Price including freight charges
C 30, painted	A	422,–	141,–	563,–
C 30, hot-dip galvanized	A	463,–	141,–	604,–
C 80, painted	A	607,–	141,–	748,–
C 80, hot-dip galvanized	A	653,–	141,–	794,–

Swarf Bin Type CS	Category	Price	Freight charges	Price including freight charges
CS 30, painted	A	486,–	141,–	627,–
CS 30, hot-dip galvanized	A	532,–	141,–	673,–
CS 80, painted	A	717,–	141,–	858,–
CS 80, hot-dip galvanized	A	766,–	225,–	991,–

Shovel Type DGS	Category	Price	Freight charges	Price including freight charges
DGS 500, painted	A	2655,–	327,–	2982,–
DGS 700, painted	A	2685,–	327,–	3012,–
DGS 950, painted	A	2723,–	398,–	3121,–
DGS 1200, painted	A	2924,–	398,–	3322,–

Prices in EUR, valid EXW DE-46354 Südlohn, DE-38820 Halberstadt, unpacked
Freight charges valid CPT Portugal, islands and oversea territories excluded

BAUER GmbH
Eichendorffstr. 62
46354 Südlohn, Germany

Tel. +49 2862 70 90
info@bauer-suedlohn.com
www.bauer-suedlohn.com

Geschäftsführer
Patrick Bauer, Pascal Bauer
Amtsgericht Coesfeld HRB 5259

TÜVNORD
TÜV NORD CERT GmbH
DIN EN ISO 9001
tuev-nord.de

Price List 0726 en-PT
Forklift Truck Attachments

Tilting Container Type DUO	Category	Price	Freight charges	Price including freight charges
DUO, painted	A	1867,–	327,–	2194,–
Lid, galvanized	A	236,–	27,–	263,–
Castor Set, polyamide, Load capacity 1350 kg / castor set	A	192,–	15,–	207,–
Set of 5 self-adhesive stickers with symbols for: glass, paper, plastic, metal, residual waste	A	29,–	on request	on request

Tilting Container Type EXPO®	Category	Price	Freight charges	Price including freight charges
EXPO 150, painted	A	608,–	141,–	749,–
Lid, galvanized	A	174,–	18,–	192,–
Castor Set, polyamide, Load capacity 1050 kg / castor set	A	156,–	15,–	171,–
Skip Body Welded Oil and Watertight	A	78,–	0,–	78,–
EXPO 150, hot-dip galvanized	A	717,–	141,–	858,–
Lid, galvanized	A	174,–	18,–	192,–
Castor Set, polyamide, Load capacity 1050 kg / castor set	A	156,–	15,–	171,–
Skip Body Welded Oil and Watertight	A	78,–	0,–	78,–
EXPO 225, painted	A	662,–	141,–	803,–
Lid, galvanized	A	174,–	18,–	192,–
Castor Set, polyamide, Load capacity 1050 kg / castor set	A	156,–	15,–	171,–
Skip Body Welded Oil and Watertight	A	78,–	0,–	78,–
EXPO 225, hot-dip galvanized	A	785,–	141,–	926,–
Lid, galvanized	A	174,–	18,–	192,–
Castor Set, polyamide, Load capacity 1050 kg / castor set	A	156,–	15,–	171,–
Skip Body Welded Oil and Watertight	A	78,–	0,–	78,–
EXPO 275, painted	A	691,–	141,–	832,–
Lid, galvanized	A	174,–	18,–	192,–
Castor Set, polyamide, Load capacity 1050 kg / castor set	A	156,–	15,–	171,–
Skip Body Welded Oil and Watertight	A	78,–	0,–	78,–
EXPO 275, hot-dip galvanized	A	826,–	141,–	967,–
Lid, galvanized	A	174,–	18,–	192,–
Castor Set, polyamide, Load capacity 1050 kg / castor set	A	156,–	15,–	171,–
Skip Body Welded Oil and Watertight	A	78,–	0,–	78,–
EXPO 300, painted	A	623,–	225,–	848,–
Lid, galvanized	A	174,–	18,–	192,–
Castor Set, polyamide, Load capacity 1350 kg / castor set	A	192,–	15,–	207,–
Skip Body Welded Oil and Watertight	A	78,–	0,–	78,–
EXPO 300, hot-dip galvanized	A	798,–	225,–	1023,–
Lid, galvanized	A	174,–	18,–	192,–
Castor Set, polyamide, Load capacity 1350 kg / castor set	A	192,–	15,–	207,–
Skip Body Welded Oil and Watertight	A	78,–	0,–	78,–
EXPO 600, painted	A	733,–	225,–	958,–
Lid, galvanized	A	196,–	22,–	218,–
Castor Set, polyamide, Load capacity 1350 kg / castor set	A	192,–	15,–	207,–
Skip Body Welded Oil and Watertight	A	78,–	0,–	78,–
EXPO 600, hot-dip galvanized	A	879,–	225,–	1104,–
Lid, galvanized	A	196,–	22,–	218,–
Castor Set, polyamide, Load capacity 1350 kg / castor set	A	192,–	15,–	207,–
Skip Body Welded Oil and Watertight	A	78,–	0,–	78,–

Prices in EUR, valid EXW DE-46354 Südlohn, DE-38820 Halberstadt, unpacked
Freight charges valid CPT Portugal, islands and oversea territories excluded

BAUER GmbH
Eichendorffstr. 62
46354 Südlohn, Germany

Tel. +49 2862 70 90
info@bauer-suedlohn.com
www.bauer-suedlohn.com

Geschäftsführer
Patrick Bauer, Pascal Bauer
Amtsgericht Coesfeld HRB 5259

TÜVNORD
TÜV NORD CERT GmbH
DIN EN ISO 9001
tuev-nord.de

Price List 0726 en-PT
Forklift Truck Attachments

Tilting Container Type EXPO®	Category	Price	Freight charges	Price including freight charges
EXPO 900, painted	A	818,–	225,–	1043,–
Lid, galvanized	A	223,–	27,–	250,–
Castor Set, polyamide, Load capacity 1350 kg / castor set	A	192,–	15,–	207,–
Skip Body Welded Oil and Watertight	A	78,–	0,–	78,–
EXPO 900, hot-dip galvanized	A	964,–	225,–	1189,–
Lid, galvanized	A	223,–	27,–	250,–
Castor Set, polyamide, Load capacity 1350 kg / castor set	A	192,–	15,–	207,–
Skip Body Welded Oil and Watertight	A	78,–	0,–	78,–
EXPO 1200, painted	A	885,–	327,–	1212,–
Lid, galvanized	A	223,–	26,–	249,–
Castor Set, polyamide, Load capacity 1350 kg / castor set	A	192,–	15,–	207,–
Skip Body Welded Oil and Watertight	A	121,–	0,–	121,–
EXPO 1200, hot-dip galvanized	A	1042,–	327,–	1369,–
Lid, galvanized	A	223,–	26,–	249,–
Castor Set, polyamide, Load capacity 1350 kg / castor set	A	192,–	15,–	207,–
Skip Body Welded Oil and Watertight	A	121,–	0,–	121,–
EXPO 1700, painted	A	1202,–	327,–	1529,–
Lid, galvanized	A	276,–	33,–	309,–
Castor Set, polyamide, Load capacity 1350 kg / castor set	A	192,–	15,–	207,–
Skip Body Welded Oil and Watertight	A	121,–	0,–	121,–
EXPO 1700, hot-dip galvanized	A	1435,–	327,–	1762,–
Lid, galvanized	A	276,–	33,–	309,–
Castor Set, polyamide, Load capacity 1350 kg / castor set	A	192,–	15,–	207,–
Skip Body Welded Oil and Watertight	A	121,–	0,–	121,–
EXPO 2100, painted	A	1325,–	327,–	1652,–
Lid, galvanized	A	360,–	36,–	396,–
Castor Set, polyamide, Load capacity 1350 kg / castor set	A	192,–	15,–	207,–
Skip Body Welded Oil and Watertight	A	121,–	0,–	121,–
EXPO 2100, hot-dip galvanized	A	1606,–	327,–	1933,–
Lid, galvanized	A	360,–	36,–	396,–
Castor Set, polyamide, Load capacity 1350 kg / castor set	A	192,–	15,–	207,–
Skip Body Welded Oil and Watertight	A	121,–	0,–	121,–

Swarf Tilting Container Type EXPO®-E	Category	Price	Freight charges	Price including freight charges
EXPO-E 150, painted	A	729,–	141,–	870,–
Lid, galvanized	A	174,–	18,–	192,–
Castor Set, polyamide, Load capacity 1050 kg / castor set	A	156,–	15,–	171,–
EXPO-E 150, hot-dip galvanized	A	837,–	141,–	978,–
Lid, galvanized	A	174,–	18,–	192,–
Castor Set, polyamide, Load capacity 1050 kg / castor set	A	156,–	15,–	171,–
EXPO-E 225, painted	A	782,–	141,–	923,–
Lid, galvanized	A	174,–	18,–	192,–
Castor Set, polyamide, Load capacity 1050 kg / castor set	A	156,–	15,–	171,–
EXPO-E 225, hot-dip galvanized	A	907,–	141,–	1048,–
Lid, galvanized	A	174,–	18,–	192,–
Castor Set, polyamide, Load capacity 1050 kg / castor set	A	156,–	15,–	171,–

Prices in EUR, valid EXW DE-46354 Südlohn, DE-38820 Halberstadt, unpacked
Freight charges valid CPT Portugal, islands and oversea territories excluded

BAUER GmbH
Eichendorffstr. 62
46354 Südlohn, Germany

Tel. +49 2862 70 90
info@bauer-suedlohn.com
www.bauer-suedlohn.com

Geschäftsführer
Patrick Bauer, Pascal Bauer
Amtsgericht Coesfeld HRB 5259

TÜVNORD
TÜV NORD CERT GmbH
DIN EN ISO 9001
tuev-nord.de

Price List 0726 en-PT
Forklift Truck Attachments

Swarf Tilting Container Type EXPO®-E	Category	Price	Freight charges	Price including freight charges
EXPO-E 275, painted	A	812,–	141,–	953,–
Lid, galvanized	A	174,–	18,–	192,–
Castor Set, polyamide, Load capacity 1050 kg / castor set	A	156,–	15,–	171,–
EXPO-E 275, hot-dip galvanized	A	944,–	141,–	1085,–
Lid, galvanized	A	174,–	18,–	192,–
Castor Set, polyamide, Load capacity 1050 kg / castor set	A	156,–	15,–	171,–
EXPO-E 300, painted	A	744,–	225,–	969,–
Lid, galvanized	A	174,–	18,–	192,–
Castor Set, polyamide, Load capacity 1350 kg / castor set	A	192,–	15,–	207,–
EXPO-E 300, hot-dip galvanized	A	919,–	225,–	1144,–
Lid, galvanized	A	174,–	18,–	192,–
Castor Set, polyamide, Load capacity 1350 kg / castor set	A	192,–	15,–	207,–
EXPO-E 600, painted	A	853,–	225,–	1078,–
Lid, galvanized	A	196,–	22,–	218,–
Castor Set, polyamide, Load capacity 1350 kg / castor set	A	192,–	15,–	207,–
EXPO-E 600, hot-dip galvanized	A	999,–	225,–	1224,–
Lid, galvanized	A	196,–	22,–	218,–
Castor Set, polyamide, Load capacity 1350 kg / castor set	A	192,–	15,–	207,–
EXPO-E 900, painted	A	938,–	225,–	1163,–
Lid, galvanized	A	223,–	27,–	250,–
Castor Set, polyamide, Load capacity 1350 kg / castor set	A	192,–	15,–	207,–
EXPO-E 900, hot-dip galvanized	A	1085,–	225,–	1310,–
Lid, galvanized	A	223,–	27,–	250,–
Castor Set, polyamide, Load capacity 1350 kg / castor set	A	192,–	15,–	207,–
EXPO-E 1200, painted	A	1048,–	327,–	1375,–
Lid, galvanized	A	223,–	26,–	249,–
Castor Set, polyamide, Load capacity 1350 kg / castor set	A	192,–	15,–	207,–
EXPO-E 1200, hot-dip galvanized	A	1204,–	327,–	1531,–
Lid, galvanized	A	223,–	26,–	249,–
Castor Set, polyamide, Load capacity 1350 kg / castor set	A	192,–	15,–	207,–
EXPO-E 1700, painted	A	1365,–	327,–	1692,–
Lid, galvanized	A	276,–	33,–	309,–
Castor Set, polyamide, Load capacity 1350 kg / castor set	A	192,–	15,–	207,–
EXPO-E 1700, hot-dip galvanized	A	1598,–	327,–	1925,–
Lid, galvanized	A	276,–	33,–	309,–
Castor Set, polyamide, Load capacity 1350 kg / castor set	A	192,–	15,–	207,–
EXPO-E 2100, painted	A	1488,–	327,–	1815,–
Lid, galvanized	A	360,–	36,–	396,–
Castor Set, polyamide, Load capacity 1350 kg / castor set	A	192,–	15,–	207,–
EXPO-E 2100, hot-dip galvanized	A	1768,–	327,–	2095,–
Lid, galvanized	A	360,–	36,–	396,–
Castor Set, polyamide, Load capacity 1350 kg / castor set	A	192,–	15,–	207,–

Container With Drop Away Base Type FB	Category	Price	Freight charges	Price including freight charges
FB 500, painted	A	809,–	225,–	1034,–
Lid, galvanized	A	196,–	15,–	211,–

Prices in EUR, valid EXW DE-46354 Südlohn, DE-38820 Halberstadt, unpacked
Freight charges valid CPT Portugal, islands and oversea territories excluded

BAUER GmbH
Eichendorffstr. 62
46354 Südlohn, Germany

Tel. +49 2862 70 90
info@bauer-suedlohn.com
www.bauer-suedlohn.com

Geschäftsführer
Patrick Bauer, Pascal Bauer
Amtsgericht Coesfeld HRB 5259

TÜVNORD
TÜV NORD CERT GmbH
DIN EN ISO 9001
tuev-nord.de

Price List 0726 en-PT
Forklift Truck Attachments

Container With Drop Away Base Type FB	Category	Price	Freight charges	Price including freight charges
Castor Set, polyamide, Load capacity 1350 kg / castor set	A	192,–	15,–	207,–
Guiding Plates, galvanized	A	116,–	12,–	128,–
FB 500, hot-dip galvanized	A	994,–	225,–	1219,–
Lid, galvanized	A	196,–	15,–	211,–
Castor Set, polyamide, Load capacity 1350 kg / castor set	A	192,–	15,–	207,–
Guiding Plates, galvanized	A	116,–	12,–	128,–
FB 750, painted	A	880,–	225,–	1105,–
Lid, galvanized	A	196,–	15,–	211,–
Castor Set, polyamide, Load capacity 1350 kg / castor set	A	192,–	15,–	207,–
Guiding Plates, galvanized	A	116,–	12,–	128,–
FB 750, hot-dip galvanized	A	1075,–	225,–	1300,–
Lid, galvanized	A	196,–	15,–	211,–
Castor Set, polyamide, Load capacity 1350 kg / castor set	A	192,–	15,–	207,–
Guiding Plates, galvanized	A	116,–	12,–	128,–
FB 1000, painted	A	942,–	225,–	1167,–
Lid, galvanized	A	238,–	18,–	256,–
Castor Set, polyamide, Load capacity 1350 kg / castor set	A	192,–	15,–	207,–
Guiding Plates, galvanized	A	116,–	12,–	128,–
FB 1000, hot-dip galvanized	A	1157,–	225,–	1382,–
Lid, galvanized	A	238,–	18,–	256,–
Castor Set, polyamide, Load capacity 1350 kg / castor set	A	192,–	15,–	207,–
Guiding Plates, galvanized	A	116,–	12,–	128,–
FB 1500, painted	A	1105,–	327,–	1432,–
Lid, galvanized	A	351,–	21,–	372,–
Castor Set, polyamide, Load capacity 1350 kg / castor set	A	192,–	15,–	207,–
Guiding Plates, galvanized	A	116,–	12,–	128,–
FB 1500, hot-dip galvanized	A	1392,–	327,–	1719,–
Lid, galvanized	A	351,–	21,–	372,–
Castor Set, polyamide, Load capacity 1350 kg / castor set	A	192,–	15,–	207,–
Guiding Plates, galvanized	A	116,–	12,–	128,–
FB 2000, painted	A	1192,–	327,–	1519,–
Lid, galvanized	A	351,–	21,–	372,–
Castor Set, polyamide, Load capacity 1350 kg / castor set	A	192,–	15,–	207,–
Guiding Plates, galvanized	A	116,–	12,–	128,–
FB 2000, hot-dip galvanized	A	1512,–	327,–	1839,–
Lid, galvanized	A	351,–	21,–	372,–
Castor Set, polyamide, Load capacity 1350 kg / castor set	A	192,–	15,–	207,–
Guiding Plates, galvanized	A	116,–	12,–	128,–

Drum Tipper Type FD/L-HK	Category	Price	Freight charges	Price including freight charges
FD/L-HK, painted	B	2324,–	225,–	2549,–
FD/L-HK, hot-dip galvanized	B	2765,–	225,–	2990,–

Drum Tipper Type FD/L-K	Category	Price	Freight charges	Price including freight charges
FD/L-K, painted	B	2515,–	225,–	2740,–

Prices in EUR, valid EXW DE-46354 Südlohn, DE-38820 Halberstadt, unpacked
Freight charges valid CPT Portugal, islands and oversea territories excluded

BAUER GmbH
Eichendorffstr. 62
46354 Südlohn, Germany

Tel. +49 2862 70 90
info@bauer-suedlohn.com
www.bauer-suedlohn.com

Geschäftsführer
Patrick Bauer, Pascal Bauer
Amtsgericht Coesfeld HRB 5259

TÜVNORD
TÜV NORD CERT GmbH
DIN EN ISO 9001
tuev-nord.de

Price List 0726 en-PT
Forklift Truck Attachments

Drum Tipper Type FD/L-K	Category	Price	Freight charges	Price including freight charges
FD/L-K, hot-dip galvanized	B	2965,–	225,–	3190,–

Drum Tipper Type FD-H	Category	Price	Freight charges	Price including freight charges
FD-H, painted	B	2593,–	141,–	2734,–
FD-H, hot-dip galvanized	B	2828,–	141,–	2969,–

Drum Tipper Type FD-HK	Category	Price	Freight charges	Price including freight charges
FD-HK, painted	B	1997,–	141,–	2138,–
FD-HK, hot-dip galvanized	B	2237,–	141,–	2378,–

Drum Tipper Type FD-K	Category	Price	Freight charges	Price including freight charges
FD-K, painted	B	2188,–	141,–	2329,–
FD-K, hot-dip galvanized	B	2437,–	141,–	2578,–

Drum Tipper Type FD-SK	Category	Price	Freight charges	Price including freight charges
FD-SK, painted	B	1997,–	141,–	2138,–
FD-SK, hot-dip galvanized	B	2237,–	141,–	2378,–

Drum Jack Type FH	Category	Price	Freight charges	Price including freight charges
FH-I 120, painted	B	1645,–	141,–	1786,–
FH-I 120, hot-dip galvanized	B	1823,–	141,–	1964,–
FH-I 220, painted	B	1645,–	141,–	1786,–
FH-I 220, hot-dip galvanized	B	1852,–	141,–	1993,–
FH-II 120, painted	B	2402,–	141,–	2543,–
FH-II 120, hot-dip galvanized	B	2673,–	141,–	2814,–
FH-II 220, painted	B	2402,–	141,–	2543,–
FH-II 220, hot-dip galvanized	B	2729,–	141,–	2870,–

Drum Gripper Type FK	Category	Price	Freight charges	Price including freight charges
FK-I, painted	B	1251,–	141,–	1392,–
FK-I, hot-dip galvanized	B	1524,–	141,–	1665,–
FK-II, painted	B	1488,–	225,–	1713,–
FK-II, hot-dip galvanized	B	1882,–	225,–	2107,–

Drum Clamp Type FKL	Category	Price	Freight charges	Price including freight charges
FKL, painted	B	480,–	60,–	540,–

Drum Tipper Type FLEX-HK	Category	Price	Freight charges	Price including freight charges
FLEX-HK, painted	B	2164,–	141,–	2305,–
Shelf Drum Pallet RP, galvanized	B	145,–	60,–	205,–
FLEX-HK, hot-dip galvanized	B	2338,–	141,–	2479,–
Shelf Drum Pallet RP, galvanized	B	145,–	60,–	205,–

Prices in EUR, valid EXW DE-46354 Südlohn, DE-38820 Halberstadt, unpacked
Freight charges valid CPT Portugal, islands and oversea territories excluded

BAUER GmbH
Eichendorffstr. 62
46354 Südlohn, Germany

Tel. +49 2862 70 90
info@bauer-suedlohn.com
www.bauer-suedlohn.com

Geschäftsführer
Patrick Bauer, Pascal Bauer
Amtsgericht Coesfeld HRB 5259

TÜVNORD
TÜV NORD CERT GmbH
DIN EN ISO 9001
tuev-nord.de

Price List 0726 en-PT
Forklift Truck Attachments

Drum Tipper Type FLEX-K	Category	Price	Freight charges	Price including freight charges
FLEX-K, painted	B	2363,–	141,–	2504,–
Shelf Drum Pallet RP, galvanized	B	145,–	60,–	205,–
FLEX-K, hot-dip galvanized	B	2533,–	141,–	2674,–
Shelf Drum Pallet RP, galvanized	B	145,–	60,–	205,–

Drum Traverse Type FT/M	Category	Price	Freight charges	Price including freight charges
FT/M, galvanized	B	316,–	60,–	376,–

Drum Traverse Type FT/MK	Category	Price	Freight charges	Price including freight charges
FT/MK, galvanized	B	362,–	60,–	422,–

Drum Turner Type FW	Category	Price	Freight charges	Price including freight charges
FW-I, painted	B	1389,–	225,–	1614,–
FW-I, hot-dip galvanized	B	1803,–	225,–	2028,–
FW-II, painted	B	1945,–	225,–	2170,–
FW-II, hot-dip galvanized	B	2533,–	225,–	2758,–

Drum Turning Claw Type FWZ	Category	Price	Freight charges	Price including freight charges
FWZ-60, painted	B	1355,–	94,–	1449,–
FWZ-60, galvanized	B	1335,–	94,–	1429,–
FWZ-200, painted	B	1397,–	94,–	1491,–
FWZ-200, galvanized	B	1376,–	94,–	1470,–

Fork Extensions Type GG	Category	Price	Freight charges	Price including freight charges
GG 80/40 (1600 mm long), painted	A	541,–	141,–	682,–
GG 80/40 (1800 mm long), painted	A	570,–	141,–	711,–
GG 80/40 (2000 mm long), painted	A	601,–	141,–	742,–
GG 100/40 (1600 mm long), painted	A	541,–	141,–	682,–
GG 100/40 (1800 mm long), painted	A	570,–	141,–	711,–
GG 100/40 (2000 mm long), painted	A	601,–	141,–	742,–
GG 100/45 (1600 mm long), painted	A	541,–	141,–	682,–
GG 100/45 (1800 mm long), painted	A	570,–	141,–	711,–
GG 100/45 (2000 mm long), painted	A	601,–	141,–	742,–
GG 100/50 (1600 mm long), painted	A	541,–	141,–	682,–
GG 100/50 (1800 mm long), painted	A	570,–	141,–	711,–
GG 100/50 (2000 mm long), painted	A	601,–	225,–	826,–
GG 120/40 (1600 mm long), painted	A	570,–	141,–	711,–
GG 120/40 (1800 mm long), painted	A	601,–	225,–	826,–
GG 120/40 (2000 mm long), painted	A	645,–	225,–	870,–
GG 120/50 (1600 mm long), painted	A	570,–	141,–	711,–
GG 120/50 (1800 mm long), painted	A	601,–	225,–	826,–
GG 120/50 (2000 mm long), painted	A	645,–	225,–	870,–
GG 125/45 (1600 mm long), painted	A	570,–	141,–	711,–
GG 125/45 (1800 mm long), painted	A	601,–	225,–	826,–
GG 125/45 (2000 mm long), painted	A	645,–	225,–	870,–

Prices in EUR, valid EXW DE-46354 Südlohn, DE-38820 Halberstadt, unpacked
Freight charges valid CPT Portugal, islands and oversea territories excluded

BAUER GmbH
Eichendorffstr. 62
46354 Südlohn, Germany

Tel. +49 2862 70 90
info@bauer-suedlohn.com
www.bauer-suedlohn.com

Geschäftsführer
Patrick Bauer, Pascal Bauer
Amtsgericht Coesfeld HRB 5259

TÜVNORD
TÜV NORD CERT GmbH
DIN EN ISO 9001
tuev-nord.de

Price List 0726 en-PT
Forklift Truck Attachments

Fork Extensions Type GG	Category	Price	Freight charges	Price including freight charges
GG 125/50 (1600 mm long), painted	A	570,–	141,–	711,–
GG 125/50 (1800 mm long), painted	A	601,–	225,–	826,–
GG 125/50 (2000 mm long), painted	A	645,–	225,–	870,–
GG 150/50 (1600 mm long), painted	A	634,–	225,–	859,–
GG 150/50 (1800 mm long), painted	A	680,–	225,–	905,–
GG 150/50 (2000 mm long), painted	A	713,–	225,–	938,–
GG 150/70 (1600 mm long), painted	A	634,–	225,–	859,–
GG 150/70 (1800 mm long), painted	A	680,–	225,–	905,–
GG 150/70 (2000 mm long), painted	A	713,–	225,–	938,–

Fork Extensions Type GO	Category	Price	Freight charges	Price including freight charges
GO 80/40 (1600 mm long), painted	A	390,–	141,–	531,–
GO 80/40 (1800 mm long), painted	A	396,–	141,–	537,–
GO 80/40 (2000 mm long), painted	A	411,–	141,–	552,–
GO 100/40 (1600 mm long), painted	A	390,–	141,–	531,–
GO 100/40 (1800 mm long), painted	A	396,–	141,–	537,–
GO 100/40 (2000 mm long), painted	A	411,–	141,–	552,–
GO 100/45 (1600 mm long), painted	A	390,–	141,–	531,–
GO 100/45 (1800 mm long), painted	A	396,–	141,–	537,–
GO 100/45 (2000 mm long), painted	A	411,–	141,–	552,–
GO 100/50 (1600 mm long), painted	A	390,–	141,–	531,–
GO 100/50 (1800 mm long), painted	A	396,–	141,–	537,–
GO 100/50 (2000 mm long), painted	A	411,–	141,–	552,–
GO 120/40 (1600 mm long), painted	A	396,–	141,–	537,–
GO 120/40 (1800 mm long), painted	A	418,–	141,–	559,–
GO 120/40 (2000 mm long), painted	A	435,–	141,–	576,–
GO 120/50 (1600 mm long), painted	A	396,–	141,–	537,–
GO 120/50 (1800 mm long), painted	A	418,–	141,–	559,–
GO 120/50 (2000 mm long), painted	A	435,–	141,–	576,–
GO 125/45 (1600 mm long), painted	A	396,–	141,–	537,–
GO 125/45 (1800 mm long), painted	A	418,–	141,–	559,–
GO 125/45 (2000 mm long), painted	A	435,–	141,–	576,–
GO 125/50 (1600 mm long), painted	A	396,–	141,–	537,–
GO 125/50 (1800 mm long), painted	A	418,–	141,–	559,–
GO 125/50 (2000 mm long), painted	A	435,–	141,–	576,–
GO 150/50 (1600 mm long), painted	A	475,–	141,–	616,–
GO 150/50 (1800 mm long), painted	A	516,–	141,–	657,–
GO 150/50 (2000 mm long), painted	A	555,–	141,–	696,–
GO 150/70 (1600 mm long), painted	A	475,–	141,–	616,–
GO 150/70 (1800 mm long), painted	A	516,–	141,–	657,–
GO 150/70 (2000 mm long), painted	A	555,–	141,–	696,–

Tilting Container Type GU	Category	Price	Freight charges	Price including freight charges
GU 300, painted	A	655,–	225,–	880,–
Lid, galvanized	A	98,–	18,–	116,–

Prices in EUR, valid EXW DE-46354 Südlohn, DE-38820 Halberstadt, unpacked
Freight charges valid CPT Portugal, islands and oversea territories excluded

BAUER GmbH
Eichendorffstr. 62
46354 Südlohn, Germany

Tel. +49 2862 70 90
info@bauer-suedlohn.com
www.bauer-suedlohn.com

Geschäftsführer
Patrick Bauer, Pascal Bauer
Amtsgericht Coesfeld HRB 5259

TÜVNORD
TÜV NORD CERT GmbH
DIN EN ISO 9001
tuev-nord.de

Price List 0726 en-PT
Forklift Truck Attachments

Tilting Container Type GU	Category	Price	Freight charges	Price including freight charges
Castor Set, polyamide, Load capacity 1350 kg / castor set	A	192,–	15,–	207,–
Skip Body Welded Oil and Watertight	A	78,–	0,–	78,–
Crane lifting eyes for use with a crane	A	106,–	8,–	114,–
Support legs, 100 mm ground leeway	A	70,–	8,–	78,–
GU 300, hot-dip galvanized	A	866,–	225,–	1091,–
Lid, galvanized	A	98,–	18,–	116,–
Castor Set, polyamide, Load capacity 1350 kg / castor set	A	192,–	15,–	207,–
Skip Body Welded Oil and Watertight	A	78,–	0,–	78,–
Crane lifting eyes for use with a crane	A	106,–	8,–	114,–
Support legs, 100 mm ground leeway	A	70,–	8,–	78,–
GU 500, painted	A	891,–	225,–	1116,–
Lid, galvanized	A	98,–	18,–	116,–
Castor Set, polyamide, Load capacity 1350 kg / castor set	A	192,–	15,–	207,–
Skip Body Welded Oil and Watertight	A	78,–	0,–	78,–
Adjustable dumping brake	A	464,–	10,–	474,–
Crane lifting eyes for use with a crane	A	106,–	8,–	114,–
Support legs, 100 mm ground leeway	A	70,–	8,–	78,–
GU 500, hot-dip galvanized	A	1160,–	225,–	1385,–
Lid, galvanized	A	98,–	18,–	116,–
Castor Set, polyamide, Load capacity 1350 kg / castor set	A	192,–	15,–	207,–
Skip Body Welded Oil and Watertight	A	78,–	0,–	78,–
Adjustable dumping brake	A	464,–	10,–	474,–
Crane lifting eyes for use with a crane	A	106,–	8,–	114,–
Support legs, 100 mm ground leeway	A	70,–	8,–	78,–
GU 750, painted	A	1052,–	225,–	1277,–
Lid, galvanized	A	139,–	26,–	165,–
Castor Set, polyamide, Load capacity 1350 kg / castor set	A	192,–	15,–	207,–
Skip Body Welded Oil and Watertight	A	78,–	0,–	78,–
Adjustable dumping brake	A	464,–	10,–	474,–
Crane lifting eyes for use with a crane	A	106,–	8,–	114,–
Support legs, 100 mm ground leeway	A	70,–	8,–	78,–
GU 750, hot-dip galvanized	A	1371,–	225,–	1596,–
Lid, galvanized	A	139,–	26,–	165,–
Castor Set, polyamide, Load capacity 1350 kg / castor set	A	192,–	15,–	207,–
Skip Body Welded Oil and Watertight	A	78,–	0,–	78,–
Adjustable dumping brake	A	464,–	10,–	474,–
Crane lifting eyes for use with a crane	A	106,–	8,–	114,–
Support legs, 100 mm ground leeway	A	70,–	8,–	78,–
GU 1000, painted	A	1163,–	225,–	1388,–
Lid, galvanized	A	192,–	27,–	219,–
Castor Set, polyamide, Load capacity 1350 kg / castor set	A	192,–	15,–	207,–
Skip Body Welded Oil and Watertight	A	121,–	0,–	121,–
Adjustable dumping brake	A	464,–	10,–	474,–
Crane lifting eyes for use with a crane	A	106,–	8,–	114,–
Support legs, 100 mm ground leeway	A	70,–	8,–	78,–
GU 1000, hot-dip galvanized	A	1647,–	327,–	1974,–

Prices in EUR, valid EXW DE-46354 Südlohn, DE-38820 Halberstadt, unpacked
Freight charges valid CPT Portugal, islands and oversea territories excluded

BAUER GmbH
Eichendorffstr. 62
46354 Südlohn, Germany

Tel. +49 2862 70 90
info@bauer-suedlohn.com
www.bauer-suedlohn.com

Geschäftsführer
Patrick Bauer, Pascal Bauer
Amtsgericht Coesfeld HRB 5259

TÜVNORD
TÜV NORD CERT GmbH
DIN EN ISO 9001
tuev-nord.de

Price List 0726 en-PT
Forklift Truck Attachments

Tilting Container Type GU	Category	Price	Freight charges	Price including freight charges
Lid, galvanized	A	192,–	27,–	219,–
Castor Set, polyamide, Load capacity 1350 kg / castor set	A	192,–	15,–	207,–
Skip Body Welded Oil and Watertight	A	121,–	0,–	121,–
Adjustable dumping brake	A	464,–	10,–	474,–
Crane lifting eyes for use with a crane	A	106,–	8,–	114,–
Support legs, 100 mm ground leeway	A	70,–	8,–	78,–
GU 1500, painted	A	1357,–	327,–	1684,–
Lid, galvanized	A	192,–	27,–	219,–
Castor Set, polyamide, Load capacity 1350 kg / castor set	A	192,–	15,–	207,–
Skip Body Welded Oil and Watertight	A	121,–	0,–	121,–
Adjustable dumping brake	A	464,–	10,–	474,–
Crane lifting eyes for use with a crane	A	106,–	8,–	114,–
Support legs, 100 mm ground leeway	A	70,–	8,–	78,–
GU 1500, hot-dip galvanized	A	1769,–	327,–	2096,–
Lid, galvanized	A	192,–	27,–	219,–
Castor Set, polyamide, Load capacity 1350 kg / castor set	A	192,–	15,–	207,–
Skip Body Welded Oil and Watertight	A	121,–	0,–	121,–
Adjustable dumping brake	A	464,–	10,–	474,–
Crane lifting eyes for use with a crane	A	106,–	8,–	114,–
Support legs, 100 mm ground leeway	A	70,–	8,–	78,–
GU 2000, painted	A	1675,–	327,–	2002,–
Lid, galvanized	A	226,–	32,–	258,–
Castor Set, polyamide, Load capacity 1350 kg / castor set	A	192,–	15,–	207,–
Skip Body Welded Oil and Watertight	A	121,–	0,–	121,–
Adjustable dumping brake	A	464,–	10,–	474,–
Crane lifting eyes for use with a crane	A	106,–	8,–	114,–
Support legs, 100 mm ground leeway	A	70,–	8,–	78,–
GU 2000, hot-dip galvanized	A	2200,–	327,–	2527,–
Lid, galvanized	A	226,–	32,–	258,–
Castor Set, polyamide, Load capacity 1350 kg / castor set	A	192,–	15,–	207,–
Skip Body Welded Oil and Watertight	A	121,–	0,–	121,–
Adjustable dumping brake	A	464,–	10,–	474,–
Crane lifting eyes for use with a crane	A	106,–	8,–	114,–
Support legs, 100 mm ground leeway	A	70,–	8,–	78,–

Swarf Tilting Container Type GU-E	Category	Price	Freight charges	Price including freight charges
GU-E 300, painted	A	775,–	225,–	1000,–
Lid, galvanized	A	98,–	18,–	116,–
Castor Set, polyamide, Load capacity 1350 kg / castor set	A	192,–	15,–	207,–
Crane lifting eyes for use with a crane	A	106,–	8,–	114,–
Support legs, 100 mm ground leeway	A	70,–	8,–	78,–
GU-E 300, hot-dip galvanized	A	986,–	225,–	1211,–
Lid, galvanized	A	98,–	18,–	116,–
Castor Set, polyamide, Load capacity 1350 kg / castor set	A	192,–	15,–	207,–
Crane lifting eyes for use with a crane	A	106,–	8,–	114,–
Support legs, 100 mm ground leeway	A	70,–	8,–	78,–

Prices in EUR, valid EXW DE-46354 Südlohn, DE-38820 Halberstadt, unpacked
Freight charges valid CPT Portugal, islands and oversea territories excluded

BAUER GmbH
Eichendorffstr. 62
46354 Südlohn, Germany

Tel. +49 2862 70 90
info@bauer-suedlohn.com
www.bauer-suedlohn.com

Geschäftsführer
Patrick Bauer, Pascal Bauer
Amtsgericht Coesfeld HRB 5259

TÜVNORD
TÜV NORD CERT GmbH
DIN EN ISO 9001
tuev-nord.de

Price List 0726 en-PT
Forklift Truck Attachments

Swarf Tilting Container Type GU-E	Category	Price	Freight charges	Price including freight charges
GU-E 500, painted	A	1012,–	225,–	1237,–
Lid, galvanized	A	98,–	18,–	116,–
Castor Set, polyamide, Load capacity 1350 kg / castor set	A	192,–	15,–	207,–
Adjustable dumping brake	A	464,–	10,–	474,–
Crane lifting eyes for use with a crane	A	106,–	8,–	114,–
Support legs, 100 mm ground leeway	A	70,–	8,–	78,–
GU-E 500, hot-dip galvanized	A	1280,–	225,–	1505,–
Lid, galvanized	A	98,–	18,–	116,–
Castor Set, polyamide, Load capacity 1350 kg / castor set	A	192,–	15,–	207,–
Adjustable dumping brake	A	464,–	10,–	474,–
Crane lifting eyes for use with a crane	A	106,–	8,–	114,–
Support legs, 100 mm ground leeway	A	70,–	8,–	78,–
GU-E 750, painted	A	1172,–	225,–	1397,–
Lid, galvanized	A	139,–	26,–	165,–
Castor Set, polyamide, Load capacity 1350 kg / castor set	A	192,–	15,–	207,–
Adjustable dumping brake	A	464,–	10,–	474,–
Crane lifting eyes for use with a crane	A	106,–	8,–	114,–
Support legs, 100 mm ground leeway	A	70,–	8,–	78,–
GU-E 750, hot-dip galvanized	A	1491,–	225,–	1716,–
Lid, galvanized	A	139,–	26,–	165,–
Castor Set, polyamide, Load capacity 1350 kg / castor set	A	192,–	15,–	207,–
Adjustable dumping brake	A	464,–	10,–	474,–
Crane lifting eyes for use with a crane	A	106,–	8,–	114,–
Support legs, 100 mm ground leeway	A	70,–	8,–	78,–
GU-E 1000, painted	A	1325,–	225,–	1550,–
Lid, galvanized	A	192,–	27,–	219,–
Castor Set, polyamide, Load capacity 1350 kg / castor set	A	192,–	15,–	207,–
Adjustable dumping brake	A	464,–	10,–	474,–
Crane lifting eyes for use with a crane	A	106,–	8,–	114,–
Support legs, 100 mm ground leeway	A	70,–	8,–	78,–
GU-E 1000, hot-dip galvanized	A	1810,–	327,–	2137,–
Lid, galvanized	A	192,–	27,–	219,–
Castor Set, polyamide, Load capacity 1350 kg / castor set	A	192,–	15,–	207,–
Adjustable dumping brake	A	464,–	10,–	474,–
Crane lifting eyes for use with a crane	A	106,–	8,–	114,–
Support legs, 100 mm ground leeway	A	70,–	8,–	78,–
GU-E 1500, painted	A	1520,–	327,–	1847,–
Lid, galvanized	A	192,–	27,–	219,–
Castor Set, polyamide, Load capacity 1350 kg / castor set	A	192,–	15,–	207,–
Adjustable dumping brake	A	464,–	10,–	474,–
Crane lifting eyes for use with a crane	A	106,–	8,–	114,–
Support legs, 100 mm ground leeway	A	70,–	8,–	78,–
GU-E 1500, hot-dip galvanized	A	1932,–	327,–	2259,–
Lid, galvanized	A	192,–	27,–	219,–
Castor Set, polyamide, Load capacity 1350 kg / castor set	A	192,–	15,–	207,–
Adjustable dumping brake	A	464,–	10,–	474,–

Prices in EUR, valid EXW DE-46354 Südlohn, DE-38820 Halberstadt, unpacked
Freight charges valid CPT Portugal, islands and oversea territories excluded

BAUER GmbH
Eichendorffstr. 62
46354 Südlohn, Germany

Tel. +49 2862 70 90
info@bauer-suedlohn.com
www.bauer-suedlohn.com

Geschäftsführer
Patrick Bauer, Pascal Bauer
Amtsgericht Coesfeld HRB 5259

TÜVNORD
TÜV NORD CERT GmbH
DIN EN ISO 9001
tuev-nord.de

Price List 0726 en-PT
Forklift Truck Attachments

Swarf Tilting Container Type GU-E	Category	Price	Freight charges	Price including freight charges
Crane lifting eyes for use with a crane	A	106,–	8,–	114,–
Support legs, 100 mm ground leeway	A	70,–	8,–	78,–
GU-E 2000, painted	A	1838,–	327,–	2165,–
Lid, galvanized	A	226,–	32,–	258,–
Castor Set, polyamide, Load capacity 1350 kg / castor set	A	192,–	15,–	207,–
Adjustable dumping brake	A	464,–	10,–	474,–
Crane lifting eyes for use with a crane	A	106,–	8,–	114,–
Support legs, 100 mm ground leeway	A	70,–	8,–	78,–
GU-E 2000, hot-dip galvanized	A	2362,–	327,–	2689,–
Lid, galvanized	A	226,–	32,–	258,–
Castor Set, polyamide, Load capacity 1350 kg / castor set	A	192,–	15,–	207,–
Adjustable dumping brake	A	464,–	10,–	474,–
Crane lifting eyes for use with a crane	A	106,–	8,–	114,–
Support legs, 100 mm ground leeway	A	70,–	8,–	78,–

Tilting Container Type GU-RZ	Category	Price	Freight charges	Price including freight charges
GU-RZ 30, painted	A	699,–	225,–	924,–
Lid, galvanized	A	95,–	18,–	113,–
GU-RZ 30, hot-dip galvanized	A	779,–	225,–	1004,–
Lid, galvanized	A	95,–	18,–	113,–
GU-RZ 55, painted	A	931,–	225,–	1156,–
Lid, galvanized	A	95,–	18,–	113,–
GU-RZ 55, hot-dip galvanized	A	1026,–	225,–	1251,–
Lid, galvanized	A	95,–	18,–	113,–

Fork Protection Type GZS	Category	Price	Freight charges	Price including freight charges
GZS, painted	F	179,–	60,–	239,–

Container With Drop Away Base Type HKB	Category	Price	Freight charges	Price including freight charges
HKB 60, painted	A	1078,–	225,–	1303,–
HKB 70, painted	A	1140,–	225,–	1365,–
HKB 90, painted	A	1417,–	225,–	1642,–

Shovel Type HVR	Category	Price	Freight charges	Price including freight charges
HVR 50, painted	A	3393,–	327,–	3720,–
HVR 75, painted	A	3976,–	398,–	4374,–
HVR 80 L, painted	A	4095,–	398,–	4493,–
HVR 100, painted	A	5033,–	567,–	5600,–
HVR 150, painted	A	6432,–	567,–	6999,–

Kippomat Type KG-A	Category	Price	Freight charges	Price including freight charges
KG-A, hot-dip galvanized	A	3218,–	327,–	3545,–

Kippomat Type KG-B	Category	Price	Freight charges	Price including freight charges
KG-B, hot-dip galvanized	A	3137,–	327,–	3464,–

Prices in EUR, valid EXW DE-46354 Südlohn, DE-38820 Halberstadt, unpacked
Freight charges valid CPT Portugal, islands and oversea territories excluded

BAUER GmbH
Eichendorffstr. 62
46354 Südlohn, Germany

Tel. +49 2862 70 90
info@bauer-suedlohn.com
www.bauer-suedlohn.com

Geschäftsführer
Patrick Bauer, Pascal Bauer
Amtsgericht Coesfeld HRB 5259

TÜVNORD
TÜV NORD CERT GmbH
DIN EN ISO 9001
tuev-nord.de

Price List 0726 en-PT
Forklift Truck Attachments

Kippomat Type KG-C	Category	Price	Freight charges	Price including freight charges
KG-C, hot-dip galvanized	A	2081,–	225,–	2306,–

Tipping Skip Type KK	Category	Price	Freight charges	Price including freight charges
KK 250, painted	E	484,–	141,–	625,–
Lid, galvanized	E	136,–	15,–	151,–
Castor Set, polyamide, Load capacity 1050 kg / castor set	A	136,–	15,–	151,–
Castor Set, solid rubber, Load capacity 615 kg / castor set	E	103,–	15,–	118,–
KK 250, hot-dip galvanized	E	534,–	141,–	675,–
Lid, galvanized	E	136,–	15,–	151,–
Castor Set, polyamide, Load capacity 1050 kg / castor set	A	136,–	15,–	151,–
Castor Set, solid rubber, Load capacity 615 kg / castor set	E	103,–	15,–	118,–
KK 400, painted	E	551,–	141,–	692,–
Lid, galvanized	E	156,–	16,–	172,–
Castor Set, polyamide, Load capacity 1050 kg / castor set	A	136,–	15,–	151,–
Castor Set, solid rubber, Load capacity 615 kg / castor set	E	103,–	15,–	118,–
KK 400, hot-dip galvanized	E	600,–	141,–	741,–
Lid, galvanized	E	156,–	16,–	172,–
Castor Set, polyamide, Load capacity 1050 kg / castor set	A	136,–	15,–	151,–
Castor Set, solid rubber, Load capacity 615 kg / castor set	E	103,–	15,–	118,–
KK 600, painted	E	764,–	225,–	989,–
Lid, galvanized	E	173,–	20,–	193,–
Castor Set, polyamide, Load capacity 1050 kg / castor set	A	136,–	15,–	151,–
Castor Set, solid rubber, Load capacity 615 kg / castor set	E	103,–	15,–	118,–
KK 600, hot-dip galvanized	E	865,–	225,–	1090,–
Castor Set, solid rubber, Load capacity 615 kg / castor set	E	103,–	15,–	118,–
Lid, galvanized	E	173,–	20,–	193,–
Castor Set, polyamide, Load capacity 1050 kg / castor set	A	136,–	15,–	151,–
KK 800, painted	E	823,–	225,–	1048,–
Lid, galvanized	E	181,–	21,–	202,–
Castor Set, polyamide, Load capacity 1050 kg / castor set	A	136,–	15,–	151,–
Castor Set, solid rubber, Load capacity 615 kg / castor set	E	103,–	15,–	118,–
KK 800, hot-dip galvanized	E	930,–	225,–	1155,–
Lid, galvanized	E	181,–	21,–	202,–
Castor Set, polyamide, Load capacity 1050 kg / castor set	A	136,–	15,–	151,–
Castor Set, solid rubber, Load capacity 615 kg / castor set	E	103,–	15,–	118,–
KK 1000, painted	E	881,–	225,–	1106,–
Lid, galvanized	E	193,–	22,–	215,–
Castor Set, polyamide, Load capacity 1050 kg / castor set	A	136,–	15,–	151,–
Castor Set, solid rubber, Load capacity 615 kg / castor set	E	103,–	15,–	118,–
KK 1000, hot-dip galvanized	E	1014,–	225,–	1239,–
Lid, galvanized	E	193,–	22,–	215,–
Castor Set, polyamide, Load capacity 1050 kg / castor set	A	136,–	15,–	151,–
Castor Set, solid rubber, Load capacity 615 kg / castor set	E	103,–	15,–	118,–

Prices in EUR, valid EXW DE-46354 Südlohn, DE-38820 Halberstadt, unpacked
Freight charges valid CPT Portugal, islands and oversea territories excluded

BAUER GmbH
Eichendorffstr. 62
46354 Südlohn, Germany

Tel. +49 2862 70 90
info@bauer-suedlohn.com
www.bauer-suedlohn.com

Geschäftsführer
Patrick Bauer, Pascal Bauer
Amtsgericht Coesfeld HRB 5259

TÜVNORD
TÜV NORD CERT GmbH
DIN EN ISO 9001
tuev-nord.de

Price List 0726 en-PT
Forklift Truck Attachments

Kippomat Type KM	Category	Price	Freight charges	Price including freight charges
KM, hot-dip galvanized	A	3218,–	225,–	3443,–

Tipping Skip Type KN	Category	Price	Freight charges	Price including freight charges
KN 250, painted	E	484,–	141,–	625,–
Lid, galvanized	E	136,–	15,–	151,–
Castor Set, polyamide, Load capacity 1050 kg / castor set	A	136,–	15,–	151,–
Castor Set, solid rubber, Load capacity 615 kg / castor set	E	103,–	15,–	118,–
KN 250, hot-dip galvanized	E	534,–	141,–	675,–
Lid, galvanized	E	136,–	15,–	151,–
Castor Set, polyamide, Load capacity 1050 kg / castor set	A	136,–	15,–	151,–
Castor Set, solid rubber, Load capacity 615 kg / castor set	E	103,–	15,–	118,–
KN 400, painted	E	551,–	141,–	692,–
Lid, galvanized	E	156,–	16,–	172,–
Castor Set, polyamide, Load capacity 1050 kg / castor set	A	136,–	15,–	151,–
Castor Set, solid rubber, Load capacity 615 kg / castor set	E	103,–	15,–	118,–
KN 400, hot-dip galvanized	E	600,–	141,–	741,–
Lid, galvanized	E	156,–	16,–	172,–
Castor Set, polyamide, Load capacity 1050 kg / castor set	A	136,–	15,–	151,–
Castor Set, solid rubber, Load capacity 615 kg / castor set	E	103,–	15,–	118,–

Tipping Skip Type KS	Category	Price	Freight charges	Price including freight charges
KS 400, painted	E	900,–	225,–	1125,–
KS 550, painted	E	964,–	225,–	1189,–
KS 700, painted	E	1024,–	225,–	1249,–

Extensible Crane Arm Type KT	Category	Price	Freight charges	Price including freight charges
KT 2,5, painted	A	1448,–	225,–	1673,–
KT 2,5, hot-dip galvanized	A	1763,–	327,–	2090,–
KT 5,0, painted	A	1798,–	327,–	2125,–
KT 5,0, hot-dip galvanized	A	2242,–	327,–	2569,–

Extensible Crane Arm Type KTH	Category	Price	Freight charges	Price including freight charges
KTH 2,5, painted	A	1748,–	327,–	2075,–
KTH 2,5, hot-dip galvanized	A	2068,–	327,–	2395,–
KTH 5,0, painted	A	2012,–	327,–	2339,–
KTH 5,0, hot-dip galvanized	A	2373,–	327,–	2700,–

Extensible Crane Arm Type KTH-K	Category	Price	Freight charges	Price including freight charges
KTH-K 2,5, painted	A	1606,–	225,–	1831,–
KTH-K 2,5, hot-dip galvanized	A	1943,–	225,–	2168,–
KTH-K 5,0, painted	A	1852,–	225,–	2077,–
KTH-K 5,0, hot-dip galvanized	A	2232,–	327,–	2559,–

Extensible Crane Arm Type KT-K	Category	Price	Freight charges	Price including freight charges
KT-K 2,5, painted	A	1291,–	225,–	1516,–

Prices in EUR, valid EXW DE-46354 Südlohn, DE-38820 Halberstadt, unpacked
Freight charges valid CPT Portugal, islands and oversea territories excluded

BAUER GmbH
Eichendorffstr. 62
46354 Südlohn, Germany

Tel. +49 2862 70 90
info@bauer-suedlohn.com
www.bauer-suedlohn.com

Geschäftsführer
Patrick Bauer, Pascal Bauer
Amtsgericht Coesfeld HRB 5259

TÜVNORD
TÜV NORD CERT GmbH
DIN EN ISO 9001
tuev-nord.de

Price List 0726 en-PT
Forklift Truck Attachments

Extensible Crane Arm Type KT-K	Category	Price	Freight charges	Price including freight charges
KT-K 2,5, hot-dip galvanized	A	1622,–	225,–	1847,–
KT-K 5,0, painted	A	1625,–	225,–	1850,–
KT-K 5,0, hot-dip galvanized	A	2092,–	225,–	2317,–

Barrow Tipper Type KW-ET	Category	Price	Freight charges	Price including freight charges
KW-ET 250, painted	E	588,–	141,–	729,–
Lid, galvanized	E	136,–	15,–	151,–
KW-ET 250, hot-dip galvanized	E	900,–	141,–	1041,–
Lid, galvanized	E	136,–	15,–	151,–
KW-ET 400, painted	E	648,–	141,–	789,–
Lid, galvanized	E	156,–	16,–	172,–
KW-ET 400, hot-dip galvanized	E	998,–	141,–	1139,–
Lid, galvanized	E	156,–	16,–	172,–
KW-ET 600, painted	E	808,–	225,–	1033,–
Lid, galvanized	E	173,–	20,–	193,–
KW-ET 600, hot-dip galvanized	E	1166,–	225,–	1391,–
Lid, galvanized	E	173,–	20,–	193,–
KW-ET 1000, painted	E	997,–	225,–	1222,–
Lid, galvanized	E	193,–	22,–	215,–
KW-ET 1000, hot-dip galvanized	E	1591,–	225,–	1816,–
Lid, galvanized	E	193,–	22,–	215,–

Loading Arm Type LA	Category	Price	Freight charges	Price including freight charges
LA 1600-1,0, painted	A	542,–	141,–	683,–
LA 1600-1,0, hot-dip galvanized	A	581,–	141,–	722,–
LA 1600-2,5, painted	A	786,–	141,–	927,–
LA 1600-2,5, hot-dip galvanized	A	927,–	141,–	1068,–
LA 1600-5,0, painted	A	1133,–	225,–	1358,–
LA 1600-5,0, hot-dip galvanized	A	1325,–	225,–	1550,–
LA 2400-1,0, painted	A	569,–	141,–	710,–
LA 2400-1,0, hot-dip galvanized	A	632,–	141,–	773,–
LA 2400-2,5, painted	A	877,–	225,–	1102,–
LA 2400-2,5, hot-dip galvanized	A	1017,–	225,–	1242,–
LA 2400-5,0, painted	A	1250,–	225,–	1475,–
LA 2400-5,0, hot-dip galvanized	A	1480,–	225,–	1705,–
LA 25-1,0, painted	A	632,–	141,–	773,–
LA 25-1,0, hot-dip galvanized	A	683,–	141,–	824,–

Loading Arm Type LAT	Category	Price	Freight charges	Price including freight charges
LAT 25-1,0, painted	A	766,–	141,–	907,–
LAT 25-1,0, hot-dip galvanized	A	838,–	141,–	979,–

Scissor Gripper Type LG	Category	Price	Freight charges	Price including freight charges
LG 60, painted	B	245,–	60,–	305,–
LG 60, galvanized	B	223,–	60,–	283,–

Prices in EUR, valid EXW DE-46354 Südlohn, DE-38820 Halberstadt, unpacked
Freight charges valid CPT Portugal, islands and oversea territories excluded

BAUER GmbH
Eichendorffstr. 62
46354 Südlohn, Germany

Tel. +49 2862 70 90
info@bauer-suedlohn.com
www.bauer-suedlohn.com

Geschäftsführer
Patrick Bauer, Pascal Bauer
Amtsgericht Coesfeld HRB 5259

TÜVNORD
TÜV NORD CERT GmbH
DIN EN ISO 9001
tuev-nord.de

Price List 0726 en-PT
Forklift Truck Attachments

Scissor Gripper Type LG	Category	Price	Freight charges	Price including freight charges
LG 200, painted	B	245,–	60,–	305,–
LG 200, galvanized	B	223,–	60,–	283,–

Container for Long Material Type LGK	Category	Price	Freight charges	Price including freight charges
LGK, painted	A	1376,–	225,–	1601,–
Castor Set, polyamide, Load capacity 1350 kg / castor set	A	192,–	15,–	207,–
LGK, hot-dip galvanized	A	1676,–	225,–	1901,–
Castor Set, polyamide, Load capacity 1350 kg / castor set	A	192,–	15,–	207,–

Long Material Carrier Type LGT	Category	Price	Freight charges	Price including freight charges
LGT 1,5, painted	A	1929,–	327,–	2256,–
LGT 1,5, hot-dip galvanized	A	2263,–	327,–	2590,–
LGT 2,5, painted	A	2164,–	on request	on request
LGT 2,5, hot-dip galvanized	A	2590,–	on request	on request
LGT 3,5, painted	A	2989,–	on request	on request
LGT 3,5, hot-dip galvanized	A	3670,–	on request	on request
LGT 4,5, painted	A	3302,–	on request	on request
LGT 4,5, hot-dip galvanized	A	4071,–	on request	on request

Drum Claw Type LGZ	Category	Price	Freight charges	Price including freight charges
LGZ 60, painted	B	225,–	60,–	285,–
LGZ 60, galvanized	B	211,–	60,–	271,–
LGZ 200, painted	B	225,–	60,–	285,–
LGZ 200, galvanized	B	211,–	60,–	271,–

Crane Hook Type LH	Category	Price	Freight charges	Price including freight charges
LH-I 1,0, painted	A	199,–	60,–	259,–
LH-I 1,0, hot-dip galvanized	A	223,–	60,–	283,–
LH-I 1,5, painted	A	218,–	60,–	278,–
LH-I 1,5, hot-dip galvanized	A	242,–	60,–	302,–
LH-I 2,0, painted	A	229,–	60,–	289,–
LH-I 2,0, hot-dip galvanized	A	254,–	60,–	314,–
LH-I 2,5, painted	A	255,–	60,–	315,–
LH-I 2,5, hot-dip galvanized	A	279,–	60,–	339,–
LH-I 3,0, painted	A	331,–	60,–	391,–
LH-I 3,0, hot-dip galvanized	A	356,–	60,–	416,–
LH-II 1,5, painted	A	329,–	60,–	389,–
LH-II 1,5, hot-dip galvanized	A	378,–	60,–	438,–
LH-II 2,5, painted	A	434,–	60,–	494,–
LH-II 2,5, hot-dip galvanized	A	516,–	60,–	576,–
LH-II 5,0, painted	A	720,–	141,–	861,–
LH-II 5,0, hot-dip galvanized	A	808,–	141,–	949,–
LH-II 7,5, painted	A	856,–	141,–	997,–
LH-II 7,5, hot-dip galvanized	A	949,–	141,–	1090,–

Prices in EUR, valid EXW DE-46354 Südlohn, DE-38820 Halberstadt, unpacked
Freight charges valid CPT Portugal, islands and oversea territories excluded

BAUER GmbH
Eichendorffstr. 62
46354 Südlohn, Germany

Tel. +49 2862 70 90
info@bauer-suedlohn.com
www.bauer-suedlohn.com

Geschäftsführer
Patrick Bauer, Pascal Bauer
Amtsgericht Coesfeld HRB 5259

TÜVNORD
TÜV NORD CERT GmbH
DIN EN ISO 9001
tuev-nord.de

Price List 0726 en-PT
Forklift Truck Attachments

Long Load Handler Type LSL	Category	Price	Freight charges	Price including freight charges
LSL, painted	A	1141,–	225,–	1366,–
LSL, hot-dip galvanized	A	1310,–	225,–	1535,–

Long Material Sidecar Type LSW	Category	Price	Freight charges	Price including freight charges
LSW 1,3, painted	A	953,–	141,–	1094,–
LSW 1,3, hot-dip galvanized	A	1017,–	225,–	1242,–
LSW 2,5, painted	A	1132,–	141,–	1273,–
LSW 2,5, hot-dip galvanized	A	1197,–	225,–	1422,–

Access Safety Platform Type MB-B	Category	Price	Freight charges	Price including freight charges
MB-B, painted	A	1085,–	225,–	1310,–
Castor Set, polyamide, Load capacity 1050 kg / castor set	A	136,–	15,–	151,–

Access Safety Platform Type MB-B/L	Category	Price	Freight charges	Price including freight charges
MB-B/L, painted	A	1274,–	225,–	1499,–
Castor Set, polyamide, Load capacity 1050 kg / castor set	A	136,–	15,–	151,–

Access Safety Platform Type MB-D	Category	Price	Freight charges	Price including freight charges
MB-D, painted	A	908,–	225,–	1133,–
Castor Set, polyamide, Load capacity 1050 kg / castor set	A	136,–	15,–	151,–

Access Safety Platform Type MB-D/L	Category	Price	Freight charges	Price including freight charges
MB-D/L, painted	A	1096,–	225,–	1321,–
Castor Set, polyamide, Load capacity 1050 kg / castor set	A	136,–	15,–	151,–

Access Safety Platform Type MB-F	Category	Price	Freight charges	Price including freight charges
MB-F, painted	A	1074,–	225,–	1299,–
Castor Set, polyamide, Load capacity 1050 kg / castor set	A	136,–	15,–	151,–

Access Safety Platform Type MB-II	Category	Price	Freight charges	Price including freight charges
MB-II, painted	A	994,–	225,–	1219,–
Castor Set, polyamide, Load capacity 1050 kg / castor set	A	136,–	15,–	151,–
MB-II, hot-dip galvanized	A	1171,–	225,–	1396,–
Castor Set, polyamide, Load capacity 1050 kg / castor set	A	136,–	15,–	151,–

Access Safety Platform Type MB-K-IV	Category	Price	Freight charges	Price including freight charges
MB-K-IV, painted	A	2012,–	278,–	2290,–

Access Safety Platform Type MB-ST	Category	Price	Freight charges	Price including freight charges
MB-ST, painted	A	2576,–	225,–	2801,–
Castor Set, polyamide, Load capacity 1050 kg / castor set	A	136,–	15,–	151,–

Access Safety Platform Type MB-ST/L	Category	Price	Freight charges	Price including freight charges
MB-ST/L, painted	A	2764,–	225,–	2989,–

Prices in EUR, valid EXW DE-46354 Südlohn, DE-38820 Halberstadt, unpacked
Freight charges valid CPT Portugal, islands and oversea territories excluded

BAUER GmbH
Eichendorffstr. 62
46354 Südlohn, Germany

Tel. +49 2862 70 90
info@bauer-suedlohn.com
www.bauer-suedlohn.com

Geschäftsführer
Patrick Bauer, Pascal Bauer
Amtsgericht Coesfeld HRB 5259

TÜVNORD
TÜV NORD CERT GmbH
DIN EN ISO 9001
tuev-nord.de

Price List 0726 en-PT
Forklift Truck Attachments

Access Safety Platform Type MB-ST/L	Category	Price	Freight charges	Price including freight charges
Castor Set, polyamide, Load capacity 1050 kg / castor set	A	136,–	15,–	151,–

Access Safety Platform Type MB-ST/T	Category	Price	Freight charges	Price including freight charges
MB-ST/T, painted	A	2903,–	225,–	3128,–
Castor Set, polyamide, Load capacity 1050 kg / castor set	A	136,–	15,–	151,–

Access Safety Platform Type MB-ST/T/L	Category	Price	Freight charges	Price including freight charges
MB-ST/T/L, painted	A	3092,–	225,–	3317,–
Castor Set, polyamide, Load capacity 1050 kg / castor set	A	136,–	15,–	151,–

Mini Tilting Container Type MGU	Category	Price	Freight charges	Price including freight charges
MGU 230, painted	A	569,–	141,–	710,–
Lid, galvanized	A	131,–	18,–	149,–
Castor Set, polyamide, Load capacity 1050 kg / castor set	A	156,–	15,–	171,–
Skip Body Welded Oil and Watertight	A	78,–	0,–	78,–
MGU 230, hot-dip galvanized	A	655,–	225,–	880,–
Lid, galvanized	A	131,–	18,–	149,–
Castor Set, polyamide, Load capacity 1050 kg / castor set	A	156,–	15,–	171,–
Skip Body Welded Oil and Watertight	A	78,–	0,–	78,–
MGU 270, painted	A	621,–	225,–	846,–
Lid, galvanized	A	131,–	18,–	149,–
Castor Set, polyamide, Load capacity 1050 kg / castor set	A	156,–	15,–	171,–
Skip Body Welded Oil and Watertight	A	78,–	0,–	78,–
MGU 270, hot-dip galvanized	A	729,–	225,–	954,–
Lid, galvanized	A	131,–	18,–	149,–
Castor Set, polyamide, Load capacity 1050 kg / castor set	A	156,–	15,–	171,–
Skip Body Welded Oil and Watertight	A	78,–	0,–	78,–
MGU 460, painted	A	815,–	225,–	1040,–
Lid, galvanized	A	169,–	22,–	191,–
Castor Set, polyamide, Load capacity 1050 kg / castor set	A	156,–	15,–	171,–
Skip Body Welded Oil and Watertight	A	78,–	0,–	78,–
MGU 460, hot-dip galvanized	A	967,–	225,–	1192,–
Lid, galvanized	A	169,–	22,–	191,–
Castor Set, polyamide, Load capacity 1050 kg / castor set	A	156,–	15,–	171,–
Skip Body Welded Oil and Watertight	A	78,–	0,–	78,–
MGU 610, painted	A	919,–	225,–	1144,–
Lid, galvanized	A	181,–	26,–	207,–
Castor Set, polyamide, Load capacity 1050 kg / castor set	A	156,–	15,–	171,–
Skip Body Welded Oil and Watertight	A	78,–	0,–	78,–
MGU 610, hot-dip galvanized	A	1089,–	225,–	1314,–
Lid, galvanized	A	181,–	26,–	207,–
Castor Set, polyamide, Load capacity 1050 kg / castor set	A	156,–	15,–	171,–
Skip Body Welded Oil and Watertight	A	78,–	0,–	78,–

Prices in EUR, valid EXW DE-46354 Südlohn, DE-38820 Halberstadt, unpacked
Freight charges valid CPT Portugal, islands and oversea territories excluded

BAUER GmbH
Eichendorffstr. 62
46354 Südlohn, Germany

Tel. +49 2862 70 90
info@bauer-suedlohn.com
www.bauer-suedlohn.com

Geschäftsführer
Patrick Bauer, Pascal Bauer
Amtsgericht Coesfeld HRB 5259

TÜVNORD
TÜV NORD CERT GmbH
DIN EN ISO 9001
tuev-nord.de

Price List 0726 en-PT
Forklift Truck Attachments

Wheelie Bin Jack Type MH	Category	Price	Freight charges	Price including freight charges
MH-I, painted	A	657,–	141,–	798,–
MH-II, painted	A	725,–	141,–	866,–
MH-III, painted	A	784,–	141,–	925,–

Wheelie Bin Tipper Type MK	Category	Price	Freight charges	Price including freight charges
MK 120, painted	A	1273,–	141,–	1414,–
MK 240, painted	A	1273,–	141,–	1414,–

Wheelie Bin Tipper Type MK-H	Category	Price	Freight charges	Price including freight charges
MK-H 120, painted	A	1902,–	141,–	2043,–
MK-H 240, painted	A	1902,–	225,–	2127,–

Mini Container With Drop Away Base Type MSB	Category	Price	Freight charges	Price including freight charges
MSB 150, painted	A	636,–	141,–	777,–
Castor Set, polyamide, Load capacity 1050 kg / castor set	A	156,–	15,–	171,–
Guiding Plates, galvanized	A	73,–	12,–	85,–
MSB 150, hot-dip galvanized	A	746,–	141,–	887,–
Castor Set, polyamide, Load capacity 1050 kg / castor set	A	156,–	15,–	171,–
Guiding Plates, galvanized	A	73,–	12,–	85,–
MSB 250, painted	A	690,–	141,–	831,–
Castor Set, polyamide, Load capacity 1050 kg / castor set	A	156,–	15,–	171,–
Guiding Plates, galvanized	A	73,–	12,–	85,–
MSB 250, hot-dip galvanized	A	826,–	141,–	967,–
Castor Set, polyamide, Load capacity 1050 kg / castor set	A	156,–	15,–	171,–
Guiding Plates, galvanized	A	73,–	12,–	85,–
MSB 400, painted	A	850,–	141,–	991,–
Castor Set, polyamide, Load capacity 1050 kg / castor set	A	156,–	15,–	171,–
Guiding Plates, galvanized	A	73,–	12,–	85,–
MSB 400, hot-dip galvanized	A	1018,–	225,–	1243,–
Castor Set, polyamide, Load capacity 1050 kg / castor set	A	156,–	15,–	171,–
Guiding Plates, galvanized	A	73,–	12,–	85,–

Tilting Container Type NK	Category	Price	Freight charges	Price including freight charges
NK 30, painted	A	700,–	225,–	925,–
Lid, galvanized	A	98,–	15,–	113,–
Castor Set, polyamide, Load capacity 1350 kg / castor set	A	192,–	15,–	207,–
Skip Body Welded Oil and Watertight	A	78,–	0,–	78,–
NK 30, hot-dip galvanized	A	984,–	225,–	1209,–
Lid, galvanized	A	98,–	15,–	113,–
Castor Set, polyamide, Load capacity 1350 kg / castor set	A	192,–	15,–	207,–
Skip Body Welded Oil and Watertight	A	78,–	0,–	78,–
NK 50, painted	A	984,–	225,–	1209,–
Lid, galvanized	A	98,–	18,–	116,–
Castor Set, polyamide, Load capacity 1350 kg / castor set	A	192,–	15,–	207,–
Skip Body Welded Oil and Watertight	A	78,–	0,–	78,–

Prices in EUR, valid EXW DE-46354 Südlohn, DE-38820 Halberstadt, unpacked
Freight charges valid CPT Portugal, islands and oversea territories excluded

BAUER GmbH
Eichendorffstr. 62
46354 Südlohn, Germany

Tel. +49 2862 70 90
info@bauer-suedlohn.com
www.bauer-suedlohn.com

Geschäftsführer
Patrick Bauer, Pascal Bauer
Amtsgericht Coesfeld HRB 5259

TÜVNORD
TÜV NORD CERT GmbH
DIN EN ISO 9001
tuev-nord.de

Price List 0726 en-PT
Forklift Truck Attachments

Tilting Container Type NK	Category	Price	Freight charges	Price including freight charges
NK 50, hot-dip galvanized	A	1327,–	225,–	1552,–
Lid, galvanized	A	98,–	18,–	116,–
Castor Set, polyamide, Load capacity 1350 kg / castor set	A	192,–	15,–	207,–
Skip Body Welded Oil and Watertight	A	78,–	0,–	78,–
NK 75, painted	A	1115,–	327,–	1442,–
Lid, galvanized	A	142,–	22,–	164,–
Castor Set, polyamide, Load capacity 1350 kg / castor set	A	192,–	15,–	207,–
Skip Body Welded Oil and Watertight	A	78,–	0,–	78,–
NK 75, hot-dip galvanized	A	1743,–	327,–	2070,–
Lid, galvanized	A	142,–	22,–	164,–
Castor Set, polyamide, Load capacity 1350 kg / castor set	A	192,–	15,–	207,–
Skip Body Welded Oil and Watertight	A	78,–	0,–	78,–
NK 100, painted	A	1508,–	327,–	1835,–
Lid, galvanized	A	173,–	27,–	200,–
Castor Set, polyamide, Load capacity 1350 kg / castor set	A	192,–	15,–	207,–
Skip Body Welded Oil and Watertight	A	121,–	0,–	121,–
NK 100, hot-dip galvanized	A	2070,–	327,–	2397,–
Lid, galvanized	A	173,–	27,–	200,–
Castor Set, polyamide, Load capacity 1350 kg / castor set	A	192,–	15,–	207,–
Skip Body Welded Oil and Watertight	A	121,–	0,–	121,–

Cylindrical Container Type RB	Category	Price	Freight charges	Price including freight charges
RB 300, painted	A	679,–	141,–	820,–
Lid, aluminium	A	160,–	14,–	174,–
Castor Set, polyamide, Load capacity 1050 kg / castor set	A	156,–	15,–	171,–
RB 450, painted	A	793,–	141,–	934,–
Lid, aluminium	A	160,–	14,–	174,–
Castor Set, polyamide, Load capacity 1050 kg / castor set	A	156,–	15,–	171,–

Tilting Container Type RD	Category	Price	Freight charges	Price including freight charges
RD 750, painted	A	1202,–	327,–	1529,–
Castor Set, polyamide, Load capacity 1350 kg / castor set	A	192,–	15,–	207,–
Skip Body Welded Oil and Watertight	A	78,–	0,–	78,–
RD 750, hot-dip galvanized	A	1602,–	327,–	1929,–
Castor Set, polyamide, Load capacity 1350 kg / castor set	A	192,–	15,–	207,–
Skip Body Welded Oil and Watertight	A	78,–	0,–	78,–
RD 1000, painted	A	1449,–	327,–	1776,–
Castor Set, polyamide, Load capacity 1350 kg / castor set	A	192,–	15,–	207,–
Skip Body Welded Oil and Watertight	A	121,–	0,–	121,–
RD 1000, hot-dip galvanized	A	1933,–	327,–	2260,–
Castor Set, polyamide, Load capacity 1350 kg / castor set	A	192,–	15,–	207,–
Skip Body Welded Oil and Watertight	A	121,–	0,–	121,–

Platform for Off-Cuts Type RGP	Category	Price	Freight charges	Price including freight charges
RGP-1, painted	A	2437,–	on request	on request

Prices in EUR, valid EXW DE-46354 Südlohn, DE-38820 Halberstadt, unpacked
Freight charges valid CPT Portugal, islands and oversea territories excluded

BAUER GmbH
Eichendorffstr. 62
46354 Südlohn, Germany

Tel. +49 2862 70 90
info@bauer-suedlohn.com
www.bauer-suedlohn.com

Geschäftsführer
Patrick Bauer, Pascal Bauer
Amtsgericht Coesfeld HRB 5259

TÜVNORD
TÜV NORD CERT GmbH
DIN EN ISO 9001
tuev-nord.de

Price List 0726 en-PT
Forklift Truck Attachments

Platform for Off-Cuts Type RGP	Category	Price	Freight charges	Price including freight charges
RGP-1, hot-dip galvanized	A	3118,–	on request	on request
RGP-2, painted	A	2669,–	on request	on request
RGP-2, hot-dip galvanized	A	3558,–	on request	on request
RGP-3, painted	A	2907,–	on request	on request
RGP-3, hot-dip galvanized	A	3916,–	on request	on request

Shunting Aid Type RH	Category	Price	Freight charges	Price including freight charges
RH, painted	A	426,–	60,–	486,–

Shunting Aid Type RH-AC	Category	Price	Freight charges	Price including freight charges
RH-AC, painted	A	2305,–	327,–	2632,–

Shunting Aid Type RH-RA	Category	Price	Freight charges	Price including freight charges
RH-RA, painted	A	1586,–	141,–	1727,–

Shunting Aid Type RH-RAK	Category	Price	Freight charges	Price including freight charges
RH-RAK, painted	A	1691,–	141,–	1832,–

Shunting Aid Type RH-RM	Category	Price	Freight charges	Price including freight charges
RH-RM, painted	A	1178,–	141,–	1319,–

Shunting Aid Type RH-RMK	Category	Price	Freight charges	Price including freight charges
RH-RMK, painted	A	1285,–	141,–	1426,–

Drum Lifter Type RS 60	Category	Price	Freight charges	Price including freight charges
RS 60-I, painted	B	1013,–	141,–	1154,–
RS 60-I, hot-dip galvanized	B	1076,–	141,–	1217,–
RS 60-II, painted	B	1713,–	141,–	1854,–
RS 60-II, hot-dip galvanized	B	1798,–	141,–	1939,–

Drum Lifter Type RS	Category	Price	Freight charges	Price including freight charges
RS-I/91, painted	B	1701,–	225,–	1926,–
RS-I/91, hot-dip galvanized	B	1945,–	225,–	2170,–
RS-II/91, painted	B	2948,–	225,–	3173,–
RS-II/91, hot-dip galvanized	B	3320,–	225,–	3545,–
RS-I/M, painted	B	1556,–	141,–	1697,–
RS-I/M, hot-dip galvanized	B	1798,–	225,–	2023,–
RS-II/M, painted	B	2663,–	225,–	2888,–
RS-II/M, hot-dip galvanized	B	3030,–	225,–	3255,–

Drum Lifter Type RS/D 91	Category	Price	Freight charges	Price including freight charges
RS-I/D 91, painted	B	1488,–	225,–	1713,–
RS-I/D 91, hot-dip galvanized	B	1730,–	225,–	1955,–
RS-II/D 91, painted	B	2521,–	225,–	2746,–

Prices in EUR, valid EXW DE-46354 Südlohn, DE-38820 Halberstadt, unpacked
Freight charges valid CPT Portugal, islands and oversea territories excluded

BAUER GmbH
Eichendorffstr. 62
46354 Südlohn, Germany

Tel. +49 2862 70 90
info@bauer-suedlohn.com
www.bauer-suedlohn.com

Geschäftsführer
Patrick Bauer, Pascal Bauer
Amtsgericht Coesfeld HRB 5259

TÜVNORD
TÜV NORD CERT GmbH
DIN EN ISO 9001
tuev-nord.de

Price List 0726 en-PT
Forklift Truck Attachments

Drum Lifter Type RS/D 91	Category	Price	Freight charges	Price including freight charges
RS-II/D 91, hot-dip galvanized	B	2887,–	225,–	3112,–

Swarf Tilting Container Type S3S	Category	Price	Freight charges	Price including freight charges
S3S 300, painted	A	1357,–	225,–	1582,–
Lid, galvanized	A	174,–	18,–	192,–
Castor Set, polyamide, Load capacity 1050 kg / castor set	A	136,–	15,–	151,–
S3S 300, hot-dip galvanized	A	1454,–	327,–	1781,–
Lid, galvanized	A	174,–	18,–	192,–
Castor Set, polyamide, Load capacity 1050 kg / castor set	A	136,–	15,–	151,–
S3S 600, painted	A	1413,–	327,–	1740,–
Lid, galvanized	A	196,–	22,–	218,–
Castor Set, polyamide, Load capacity 1050 kg / castor set	A	136,–	15,–	151,–
S3S 600, hot-dip galvanized	A	1514,–	327,–	1841,–
Lid, galvanized	A	196,–	22,–	218,–
Castor Set, polyamide, Load capacity 1050 kg / castor set	A	136,–	15,–	151,–

Swarf Tilting Container Type S4A	Category	Price	Freight charges	Price including freight charges
S4A 600, painted	A	1271,–	225,–	1496,–
Lid, galvanized	A	196,–	22,–	218,–
S4A 600, hot-dip galvanized	A	1418,–	225,–	1643,–
Lid, galvanized	A	196,–	22,–	218,–
S4A 900, painted	A	1408,–	327,–	1735,–
Lid, galvanized	A	223,–	27,–	250,–
S4A 900, hot-dip galvanized	A	1595,–	327,–	1922,–
Lid, galvanized	A	223,–	27,–	250,–
S4A 1200, painted	A	1497,–	327,–	1824,–
Lid, galvanized	A	223,–	26,–	249,–
S4A 1200, hot-dip galvanized	A	1730,–	327,–	2057,–
Lid, galvanized	A	223,–	26,–	249,–

Container With Drop Away Base Type SB	Category	Price	Freight charges	Price including freight charges
SB 500, painted	B	1000,–	225,–	1225,–
Lid, galvanized	B	143,–	16,–	159,–
Castor Set, polyamide, Load capacity 1350 kg / castor set	A	192,–	15,–	207,–
Heavy-duty Castor Set, polyamide, Load capacity 2550 kg / castor set	A	379,–	15,–	394,–
SB 500, hot-dip galvanized	B	1303,–	225,–	1528,–
Lid, galvanized	B	143,–	16,–	159,–
Castor Set, polyamide, Load capacity 1350 kg / castor set	A	192,–	15,–	207,–
Heavy-duty Castor Set, polyamide, Load capacity 2550 kg / castor set	A	379,–	15,–	394,–
SB 750, painted	B	1094,–	225,–	1319,–
Lid, galvanized	B	143,–	16,–	159,–
Castor Set, polyamide, Load capacity 1350 kg / castor set	A	192,–	15,–	207,–
Heavy-duty Castor Set, polyamide, Load capacity 2550 kg / castor set	A	379,–	15,–	394,–
SB 750, hot-dip galvanized	B	1520,–	327,–	1847,–
Lid, galvanized	B	143,–	16,–	159,–

Prices in EUR, valid EXW DE-46354 Südlohn, DE-38820 Halberstadt, unpacked
Freight charges valid CPT Portugal, islands and oversea territories excluded

BAUER GmbH
Eichendorffstr. 62
46354 Südlohn, Germany

Tel. +49 2862 70 90
info@bauer-suedlohn.com
www.bauer-suedlohn.com

Geschäftsführer
Patrick Bauer, Pascal Bauer
Amtsgericht Coesfeld HRB 5259

TÜVNORD
TÜV NORD CERT GmbH
DIN EN ISO 9001
tuev-nord.de

Price List 0726 en-PT
Forklift Truck Attachments

Container With Drop Away Base Type SB	Category	Price	Freight charges	Price including freight charges
Castor Set, polyamide, Load capacity 1350 kg / castor set	A	192,–	15,–	207,–
Heavy-duty Castor Set, polyamide, Load capacity 2550 kg / castor set	A	379,–	15,–	394,–
SB 1000, painted	B	1295,–	327,–	1622,–
Lid, galvanized	B	143,–	16,–	159,–
Castor Set, polyamide, Load capacity 1350 kg / castor set	A	192,–	15,–	207,–
Heavy-duty Castor Set, polyamide, Load capacity 2550 kg / castor set	A	379,–	15,–	394,–
SB 1000, hot-dip galvanized	B	1801,–	327,–	2128,–
Lid, galvanized	B	143,–	16,–	159,–
Castor Set, polyamide, Load capacity 1350 kg / castor set	A	192,–	15,–	207,–
Heavy-duty Castor Set, polyamide, Load capacity 2550 kg / castor set	A	379,–	15,–	394,–
SB 1500, painted	B	1755,–	327,–	2082,–
Lid, galvanized	B	254,–	21,–	275,–
Castor Set, polyamide, Load capacity 1350 kg / castor set	A	192,–	15,–	207,–
Heavy-duty Castor Set, polyamide, Load capacity 2550 kg / castor set	A	379,–	15,–	394,–
SB 1500, hot-dip galvanized	B	2443,–	398,–	2841,–
Lid, galvanized	B	254,–	21,–	275,–
Castor Set, polyamide, Load capacity 1350 kg / castor set	A	192,–	15,–	207,–
Heavy-duty Castor Set, polyamide, Load capacity 2550 kg / castor set	A	379,–	15,–	394,–
SB 2000, painted	B	1803,–	398,–	2201,–
Lid, galvanized	B	254,–	21,–	275,–
Castor Set, polyamide, Load capacity 1350 kg / castor set	A	192,–	15,–	207,–
Heavy-duty Castor Set, polyamide, Load capacity 2550 kg / castor set	A	379,–	15,–	394,–
SB 2000, hot-dip galvanized	B	2581,–	398,–	2979,–
Lid, galvanized	B	254,–	21,–	275,–
Castor Set, polyamide, Load capacity 1350 kg / castor set	A	192,–	15,–	207,–
Heavy-duty Castor Set, polyamide, Load capacity 2550 kg / castor set	A	379,–	15,–	394,–

Collecting System Type SBS	Category	Price	Freight charges	Price including freight charges
SBS 500, painted	C	399,–	225,–	624,–
Trolley TW 500, hot-dip galvanized	C	258,–	141,–	399,–
SBS 500, hot-dip galvanized	C	472,–	225,–	697,–
Trolley TW 500, hot-dip galvanized	C	258,–	141,–	399,–
SBS 1000, painted	C	509,–	225,–	734,–
Trolley TW 1000, hot-dip galvanized	C	297,–	141,–	438,–
SBS 1000, hot-dip galvanized	C	626,–	225,–	851,–
Trolley TW 1000, hot-dip galvanized	C	297,–	141,–	438,–
SBS 2000, painted	C	807,–	380,–	1187,–
Trolley TW 2000, hot-dip galvanized	C	505,–	141,–	646,–
SBS 2000, hot-dip galvanized	C	968,–	380,–	1348,–
Trolley TW 2000, hot-dip galvanized	C	505,–	141,–	646,–

Filling Hopper Type SBT	Category	Price	Freight charges	Price including freight charges
SBT, painted	A	1671,–	327,–	1998,–

Prices in EUR, valid EXW DE-46354 Südlohn, DE-38820 Halberstadt, unpacked
Freight charges valid CPT Portugal, islands and oversea territories excluded

BAUER GmbH
Eichendorffstr. 62
46354 Südlohn, Germany

Tel. +49 2862 70 90
info@bauer-suedlohn.com
www.bauer-suedlohn.com

Geschäftsführer
Patrick Bauer, Pascal Bauer
Amtsgericht Coesfeld HRB 5259

TÜVNORD
TÜV NORD CERT GmbH
DIN EN ISO 9001
tuev-nord.de

Price List 0726 en-PT
Forklift Truck Attachments

Snowdozer Type SCH-F	Category	Price	Freight charges	Price including freight charges
SCH-F 150, painted	A	2233,–	327,–	2560,–
SCH-F 180, painted	A	2507,–	327,–	2834,–
SCH-F 210, painted	A	2818,–	327,–	3145,–
SCH-F 240, painted	A	3095,–	451,–	3546,–

Snowdozer Type SCH-G	Category	Price	Freight charges	Price including freight charges
SCH-G 150, painted	A	1584,–	225,–	1809,–
SCH-G 180, painted	A	1730,–	225,–	1955,–
SCH-G 210, painted	A	1998,–	327,–	2325,–
SCH-G 240, painted	A	2160,–	380,–	2540,–

Snowdozer Type SCH-L	Category	Price	Freight charges	Price including freight charges
SCH-L 1500, painted	A	1182,–	225,–	1407,–
SCH-L 1500, hot-dip galvanized	A	1310,–	225,–	1535,–
SCH-L 1800, painted	A	1380,–	225,–	1605,–
SCH-L 1800, hot-dip galvanized	A	1532,–	225,–	1757,–

Snow Plough Type SCH-P-G	Category	Price	Freight charges	Price including freight charges
SCH-P-G 150, painted	A	2493,–	327,–	2820,–
SCH-P-G 180, painted	A	2677,–	327,–	3004,–
SCH-P-G 210, painted	A	2870,–	327,–	3197,–
SCH-P-G 240, painted	A	3408,–	380,–	3788,–

Snow Plough Type SCH-P-S	Category	Price	Freight charges	Price including freight charges
SCH-P-S 150, painted	A	2318,–	327,–	2645,–
SCH-P-S 180, painted	A	2476,–	327,–	2803,–
SCH-P-S 210, painted	A	2629,–	327,–	2956,–
SCH-P-S 240, painted	A	3128,–	380,–	3508,–

Snow Plough Type SCH-P-V	Category	Price	Freight charges	Price including freight charges
SCH-P-V 150, painted	A	2681,–	327,–	3008,–
SCH-P-V 180, painted	A	2949,–	327,–	3276,–
SCH-P-V 210, painted	A	3200,–	327,–	3527,–
SCH-P-V 240, painted	A	3741,–	380,–	4121,–

Snowdozer Type SCH-S	Category	Price	Freight charges	Price including freight charges
SCH-S 150, painted	A	1407,–	225,–	1632,–
SCH-S 180, painted	A	1528,–	225,–	1753,–
SCH-S 210, painted	A	1760,–	327,–	2087,–
SCH-S 240, painted	A	1880,–	380,–	2260,–

Snow Plough Type SCH-U-G	Category	Price	Freight charges	Price including freight charges
SCH-U-G 150, painted	A	2493,–	327,–	2820,–
SCH-U-G 180, painted	A	2677,–	327,–	3004,–

Prices in EUR, valid EXW DE-46354 Südlohn, DE-38820 Halberstadt, unpacked
Freight charges valid CPT Portugal, islands and oversea territories excluded

BAUER GmbH
Eichendorffstr. 62
46354 Südlohn, Germany

Tel. +49 2862 70 90
info@bauer-suedlohn.com
www.bauer-suedlohn.com

Geschäftsführer
Patrick Bauer, Pascal Bauer
Amtsgericht Coesfeld HRB 5259

TÜVNORD
TÜV NORD CERT GmbH
DIN EN ISO 9001
tuev-nord.de

Price List 0726 en-PT
Forklift Truck Attachments

Snow Plough Type SCH-U-G	Category	Price	Freight charges	Price including freight charges
SCH-U-G 210, painted	A	2870,–	327,–	3197,–
SCH-U-G 240, painted	A	3408,–	380,–	3788,–

Snow Plough Type SCH-U-S	Category	Price	Freight charges	Price including freight charges
SCH-U-S 150, painted	A	2318,–	327,–	2645,–
SCH-U-S 180, painted	A	2476,–	327,–	2803,–
SCH-U-S 210, painted	A	2629,–	327,–	2956,–
SCH-U-S 240, painted	A	3128,–	380,–	3508,–

Snow Plough Type SCH-U-V	Category	Price	Freight charges	Price including freight charges
SCH-U-V 150, painted	A	2681,–	327,–	3008,–
SCH-U-V 180, painted	A	2949,–	327,–	3276,–
SCH-U-V 210, painted	A	3200,–	327,–	3527,–
SCH-U-V 240, painted	A	3741,–	380,–	4121,–

Snowdozer Type SCH-V	Category	Price	Freight charges	Price including freight charges
SCH-V 150, painted	A	1769,–	225,–	1994,–
SCH-V 180, painted	A	1991,–	225,–	2216,–
SCH-V 210, painted	A	2331,–	327,–	2658,–
SCH-V 240, painted	A	2492,–	380,–	2872,–

Silo Container Type SG	Category	Price	Freight charges	Price including freight charges
SG 375, painted	E	1014,–	225,–	1239,–
Lid, galvanized	E	131,–	28,–	159,–
SG 375, hot-dip galvanized	E	1760,–	225,–	1985,–
Lid, galvanized	E	131,–	28,–	159,–
SG 600, painted	E	1209,–	225,–	1434,–
Lid, galvanized	E	131,–	28,–	159,–
SG 600, hot-dip galvanized	E	1951,–	225,–	2176,–
Lid, galvanized	E	131,–	28,–	159,–

Silo Container Type SG-D	Category	Price	Freight charges	Price including freight charges
SG-D 375, painted	E	1014,–	141,–	1155,–
Lid, galvanized	E	131,–	28,–	159,–
SG-D 375, hot-dip galvanized	E	1760,–	225,–	1985,–
Lid, galvanized	E	131,–	28,–	159,–
SG-D 600, painted	E	1209,–	225,–	1434,–
Lid, galvanized	E	131,–	28,–	159,–
SG-D 600, hot-dip galvanized	E	1951,–	225,–	2176,–
Lid, galvanized	E	131,–	28,–	159,–

Silo Container Type SGK	Category	Price	Freight charges	Price including freight charges
SGK 50, painted	A	1115,–	225,–	1340,–
SGK 50, hot-dip galvanized	A	1142,–	225,–	1367,–
SGK 75, painted	A	1214,–	225,–	1439,–

Prices in EUR, valid EXW DE-46354 Südlohn, DE-38820 Halberstadt, unpacked
Freight charges valid CPT Portugal, islands and oversea territories excluded

BAUER GmbH
Eichendorffstr. 62
46354 Südlohn, Germany

Tel. +49 2862 70 90
info@bauer-suedlohn.com
www.bauer-suedlohn.com

Geschäftsführer
Patrick Bauer, Pascal Bauer
Amtsgericht Coesfeld HRB 5259

TÜVNORD
TÜV NORD CERT GmbH
DIN EN ISO 9001
tuev-nord.de

Price List 0726 en-PT
Forklift Truck Attachments

Silo Container Type SGK	Category	Price	Freight charges	Price including freight charges
SGK 75, hot-dip galvanized	A	1251,–	225,–	1476,–
SGK 100, painted	A	1327,–	225,–	1552,–
SGK 100, hot-dip galvanized	A	1367,–	225,–	1592,–

Silo Container Type SGS	Category	Price	Freight charges	Price including freight charges
SGS 50, painted	A	885,–	141,–	1026,–
SGS 50, hot-dip galvanized	A	902,–	225,–	1127,–
SGS 75, painted	A	982,–	225,–	1207,–
SGS 75, hot-dip galvanized	A	1015,–	225,–	1240,–
SGS 100, painted	A	1078,–	225,–	1303,–
SGS 100, hot-dip galvanized	A	1110,–	225,–	1335,–

Swarf Tilting Container Type SGU	Category	Price	Freight charges	Price including freight charges
SGU 30, painted	A	940,–	225,–	1165,–
Lid, galvanized	A	98,–	18,–	116,–
Castor Set, polyamide, Load capacity 1350 kg / castor set	A	192,–	15,–	207,–
Crane lifting eyes for use with a crane	A	106,–	8,–	114,–
Support legs, 100 mm ground leeway	A	70,–	8,–	78,–
SGU 30, hot-dip galvanized	A	1117,–	225,–	1342,–
Lid, galvanized	A	98,–	18,–	116,–
Castor Set, polyamide, Load capacity 1350 kg / castor set	A	192,–	15,–	207,–
Crane lifting eyes for use with a crane	A	106,–	8,–	114,–
Support legs, 100 mm ground leeway	A	70,–	8,–	78,–
SGU 50, painted	A	1163,–	225,–	1388,–
Lid, galvanized	A	98,–	18,–	116,–
Castor Set, polyamide, Load capacity 1350 kg / castor set	A	192,–	15,–	207,–
Adjustable dumping brake	A	464,–	10,–	474,–
Crane lifting eyes for use with a crane	A	106,–	8,–	114,–
Support legs, 100 mm ground leeway	A	70,–	8,–	78,–
SGU 50, hot-dip galvanized	A	1407,–	225,–	1632,–
Lid, galvanized	A	98,–	18,–	116,–
Castor Set, polyamide, Load capacity 1350 kg / castor set	A	192,–	15,–	207,–
Adjustable dumping brake	A	464,–	10,–	474,–
Crane lifting eyes for use with a crane	A	106,–	8,–	114,–
Support legs, 100 mm ground leeway	A	70,–	8,–	78,–
SGU 75, painted	A	1312,–	225,–	1537,–
Lid, galvanized	A	139,–	26,–	165,–
Castor Set, polyamide, Load capacity 1350 kg / castor set	A	192,–	15,–	207,–
Adjustable dumping brake	A	464,–	10,–	474,–
Crane lifting eyes for use with a crane	A	106,–	8,–	114,–
Support legs, 100 mm ground leeway	A	70,–	8,–	78,–
SGU 75, hot-dip galvanized	A	1623,–	225,–	1848,–
Lid, galvanized	A	139,–	26,–	165,–
Castor Set, polyamide, Load capacity 1350 kg / castor set	A	192,–	15,–	207,–
Adjustable dumping brake	A	464,–	10,–	474,–

Prices in EUR, valid EXW DE-46354 Südlohn, DE-38820 Halberstadt, unpacked
Freight charges valid CPT Portugal, islands and oversea territories excluded

BAUER GmbH
Eichendorffstr. 62
46354 Südlohn, Germany

Tel. +49 2862 70 90
info@bauer-suedlohn.com
www.bauer-suedlohn.com

Geschäftsführer
Patrick Bauer, Pascal Bauer
Amtsgericht Coesfeld HRB 5259

TÜVNORD
TÜV NORD CERT GmbH
DIN EN ISO 9001
tuev-nord.de

Price List 0726 en-PT
Forklift Truck Attachments

Swarf Tilting Container Type SGU	Category	Price	Freight charges	Price including freight charges
Crane lifting eyes for use with a crane	A	106,–	8,–	114,–
Support legs, 100 mm ground leeway	A	70,–	8,–	78,–
SGU 100, painted	A	1571,–	327,–	1898,–
Lid, galvanized	A	192,–	27,–	219,–
Castor Set, polyamide, Load capacity 1350 kg / castor set	A	192,–	15,–	207,–
Adjustable dumping brake	A	464,–	10,–	474,–
Crane lifting eyes for use with a crane	A	106,–	8,–	114,–
Support legs, 100 mm ground leeway	A	70,–	8,–	78,–
SGU 100, hot-dip galvanized	A	2120,–	327,–	2447,–
Lid, galvanized	A	192,–	27,–	219,–
Castor Set, polyamide, Load capacity 1350 kg / castor set	A	192,–	15,–	207,–
Adjustable dumping brake	A	464,–	10,–	474,–
Crane lifting eyes for use with a crane	A	106,–	8,–	114,–
Support legs, 100 mm ground leeway	A	70,–	8,–	78,–
SGU 150, painted	A	1764,–	327,–	2091,–
Lid, galvanized	A	192,–	27,–	219,–
Castor Set, polyamide, Load capacity 1350 kg / castor set	A	192,–	15,–	207,–
Adjustable dumping brake	A	464,–	10,–	474,–
Crane lifting eyes for use with a crane	A	106,–	8,–	114,–
Support legs, 100 mm ground leeway	A	70,–	8,–	78,–
SGU 150, hot-dip galvanized	A	2242,–	327,–	2569,–
Lid, galvanized	A	192,–	27,–	219,–
Castor Set, polyamide, Load capacity 1350 kg / castor set	A	192,–	15,–	207,–
Adjustable dumping brake	A	464,–	10,–	474,–
Crane lifting eyes for use with a crane	A	106,–	8,–	114,–
Support legs, 100 mm ground leeway	A	70,–	8,–	78,–
SGU 200, painted	A	2215,–	398,–	2613,–
Lid, galvanized	A	226,–	32,–	258,–
Castor Set, polyamide, Load capacity 1350 kg / castor set	A	192,–	15,–	207,–
Adjustable dumping brake	A	464,–	10,–	474,–
Crane lifting eyes for use with a crane	A	106,–	8,–	114,–
Support legs, 100 mm ground leeway	A	70,–	8,–	78,–
SGU 200, hot-dip galvanized	A	2779,–	398,–	3177,–
Castor Set, polyamide, Load capacity 1350 kg / castor set	A	192,–	15,–	207,–
Lid, galvanized	A	226,–	32,–	258,–
Adjustable dumping brake	A	464,–	10,–	474,–
Crane lifting eyes for use with a crane	A	106,–	8,–	114,–
Support legs, 100 mm ground leeway	A	70,–	8,–	78,–

Swarf Tilting Container Type SGU-RZ	Category	Price	Freight charges	Price including freight charges
SGU-RZ 30, painted	A	972,–	225,–	1197,–
Lid, galvanized	A	95,–	18,–	113,–
SGU-RZ 30, hot-dip galvanized	A	1097,–	225,–	1322,–
Lid, galvanized	A	95,–	18,–	113,–
SGU-RZ 55, painted	A	1202,–	225,–	1427,–
Lid, galvanized	A	95,–	18,–	113,–

Prices in EUR, valid EXW DE-46354 Südlohn, DE-38820 Halberstadt, unpacked
Freight charges valid CPT Portugal, islands and oversea territories excluded

BAUER GmbH
Eichendorffstr. 62
46354 Südlohn, Germany

Tel. +49 2862 70 90
info@bauer-suedlohn.com
www.bauer-suedlohn.com

Geschäftsführer
Patrick Bauer, Pascal Bauer
Amtsgericht Coesfeld HRB 5259

TÜVNORD
TÜV NORD CERT GmbH
DIN EN ISO 9001
tuev-nord.de

Price List 0726 en-PT
Forklift Truck Attachments

Swarf Tilting Container Type SGU-RZ	Category	Price	Freight charges	Price including freight charges
SGU-RZ 55, hot-dip galvanized	A	1314,–	225,–	1539,–
Lid, galvanized	A	95,–	18,–	113,–

Gritter Type SH	Category	Price	Freight charges	Price including freight charges
SH, painted	A	3569,–	225,–	3794,–
Tarpaulin	A	122,–	10,–	132,–

Forklift Safety Cage Type SIKO	Category	Price	Freight charges	Price including freight charges
SIKO, painted	A	726,–	225,–	951,–
Castor Set, polyamide, Load capacity 1050 kg / castor set	A	136,–	15,–	151,–

Forklift Safety Cage Type SIKO/L	Category	Price	Freight charges	Price including freight charges
SIKO/L, painted	A	878,–	225,–	1103,–
Castor Set, polyamide, Load capacity 1050 kg / castor set	A	136,–	15,–	151,–

Forklift Safety Cage Type SIKO-G	Category	Price	Freight charges	Price including freight charges
SIKO-G, painted	A	657,–	141,–	798,–

Forklift Safety Cage Type SIKO-M	Category	Price	Freight charges	Price including freight charges
SIKO-M, painted	A	529,–	141,–	670,–

Heavy Duty Tilting Container Type SK	Category	Price	Freight charges	Price including freight charges
SK 300, painted	A	1281,–	327,–	1608,–
Lid, galvanized	A	174,–	18,–	192,–
Heavy-duty Castor Set, polyamide, Load capacity 2550 kg / castor set	A	379,–	15,–	394,–
Skip Body Welded Oil and Watertight	A	78,–	0,–	78,–
SK 300, hot-dip galvanized	A	1555,–	327,–	1882,–
Lid, galvanized	A	174,–	18,–	192,–
Heavy-duty Castor Set, polyamide, Load capacity 2550 kg / castor set	A	379,–	15,–	394,–
Skip Body Welded Oil and Watertight	A	78,–	0,–	78,–
SK 600, painted	A	1386,–	327,–	1713,–
Lid, galvanized	A	196,–	22,–	218,–
Heavy-duty Castor Set, polyamide, Load capacity 2550 kg / castor set	A	379,–	15,–	394,–
Skip Body Welded Oil and Watertight	A	78,–	0,–	78,–
SK 600, hot-dip galvanized	A	1724,–	398,–	2122,–
Lid, galvanized	A	196,–	22,–	218,–
Heavy-duty Castor Set, polyamide, Load capacity 2550 kg / castor set	A	379,–	15,–	394,–
Skip Body Welded Oil and Watertight	A	78,–	0,–	78,–
SK 900, painted	A	1510,–	398,–	1908,–
Lid, galvanized	A	223,–	27,–	250,–
Heavy-duty Castor Set, polyamide, Load capacity 2550 kg / castor set	A	379,–	15,–	394,–
Skip Body Welded Oil and Watertight	A	78,–	0,–	78,–
SK 900, hot-dip galvanized	A	1941,–	398,–	2339,–
Lid, galvanized	A	223,–	27,–	250,–
Heavy-duty Castor Set, polyamide, Load capacity 2550 kg / castor set	A	379,–	15,–	394,–

Prices in EUR, valid EXW DE-46354 Südlohn, DE-38820 Halberstadt, unpacked
Freight charges valid CPT Portugal, islands and oversea territories excluded

BAUER GmbH
Eichendorffstr. 62
46354 Südlohn, Germany

Tel. +49 2862 70 90
info@bauer-suedlohn.com
www.bauer-suedlohn.com

Geschäftsführer
Patrick Bauer, Pascal Bauer
Amtsgericht Coesfeld HRB 5259

TÜVNORD
TÜV NORD CERT GmbH
DIN EN ISO 9001
tuev-nord.de

Price List 0726 en-PT
Forklift Truck Attachments

Heavy Duty Tilting Container Type SK	Category	Price	Freight charges	Price including freight charges
Skip Body Welded Oil and Watertight	A	78,–	0,–	78,–
SK 1200, painted	A	1770,–	398,–	2168,–
Lid, galvanized	A	223,–	26,–	249,–
Heavy-duty Castor Set, polyamide, Load capacity 2550 kg / castor set	A	379,–	15,–	394,–
Skip Body Welded Oil and Watertight	A	121,–	0,–	121,–
SK 1200, hot-dip galvanized	A	2277,–	567,–	2844,–
Lid, galvanized	A	223,–	26,–	249,–
Heavy-duty Castor Set, polyamide, Load capacity 2550 kg / castor set	A	379,–	15,–	394,–
Skip Body Welded Oil and Watertight	A	121,–	0,–	121,–
SK 1700, painted	A	1862,–	567,–	2429,–
Lid, galvanized	A	276,–	33,–	309,–
Heavy-duty Castor Set, polyamide, Load capacity 2550 kg / castor set	A	379,–	15,–	394,–
Skip Body Welded Oil and Watertight	A	121,–	0,–	121,–
SK 1700, hot-dip galvanized	A	2492,–	567,–	3059,–
Lid, galvanized	A	276,–	33,–	309,–
Heavy-duty Castor Set, polyamide, Load capacity 2550 kg / castor set	A	379,–	15,–	394,–
Skip Body Welded Oil and Watertight	A	121,–	0,–	121,–
SK 2100, painted	A	2032,–	567,–	2599,–
Lid, galvanized	A	360,–	36,–	396,–
Heavy-duty Castor Set, polyamide, Load capacity 2550 kg / castor set	A	379,–	15,–	394,–
Skip Body Welded Oil and Watertight	A	121,–	0,–	121,–
SK 2100, hot-dip galvanized	A	2739,–	567,–	3306,–
Lid, galvanized	A	360,–	36,–	396,–
Heavy-duty Castor Set, polyamide, Load capacity 2550 kg / castor set	A	379,–	15,–	394,–
Skip Body Welded Oil and Watertight	A	121,–	0,–	121,–

Broom Type SKB	Category	Price	Freight charges	Price including freight charges
SKB 100, painted	A	958,–	141,–	1099,–
SKB 150, painted	A	1197,–	141,–	1338,–
SKB 200, painted	A	1475,–	141,–	1616,–

Broom Type SKB-O	Category	Price	Freight charges	Price including freight charges
SKB-O 100, painted	A	658,–	141,–	799,–
SKB-O 150, painted	A	898,–	141,–	1039,–
SKB-O 200, painted	A	1176,–	141,–	1317,–

Swarf Tipping Skip Type SKK	Category	Price	Freight charges	Price including freight charges
SKK 250, painted	E	534,–	141,–	675,–
Lid, galvanized	E	136,–	15,–	151,–
Castor Set, polyamide, Load capacity 1050 kg / castor set	A	136,–	15,–	151,–
Castor Set, solid rubber, Load capacity 615 kg / castor set	E	103,–	15,–	118,–
SKK 250, hot-dip galvanized	E	583,–	141,–	724,–
Lid, galvanized	E	136,–	15,–	151,–
Castor Set, polyamide, Load capacity 1050 kg / castor set	A	136,–	15,–	151,–
Castor Set, solid rubber, Load capacity 615 kg / castor set	E	103,–	15,–	118,–

Prices in EUR, valid EXW DE-46354 Südlohn, DE-38820 Halberstadt, unpacked
Freight charges valid CPT Portugal, islands and oversea territories excluded

BAUER GmbH
Eichendorffstr. 62
46354 Südlohn, Germany

Tel. +49 2862 70 90
info@bauer-suedlohn.com
www.bauer-suedlohn.com

Geschäftsführer
Patrick Bauer, Pascal Bauer
Amtsgericht Coesfeld HRB 5259

TÜVNORD
TÜV NORD CERT GmbH
DIN EN ISO 9001
tuev-nord.de

Price List 0726 en-PT
Forklift Truck Attachments

Swarf Tipping Skip Type SKK	Category	Price	Freight charges	Price including freight charges
SKK 400, painted	E	600,–	141,–	741,–
Lid, galvanized	E	156,–	16,–	172,–
Castor Set, polyamide, Load capacity 1050 kg / castor set	A	136,–	15,–	151,–
Castor Set, solid rubber, Load capacity 615 kg / castor set	E	103,–	15,–	118,–
SKK 400, hot-dip galvanized	E	649,–	141,–	790,–
Lid, galvanized	E	156,–	16,–	172,–
Castor Set, polyamide, Load capacity 1050 kg / castor set	A	136,–	15,–	151,–
Castor Set, solid rubber, Load capacity 615 kg / castor set	E	103,–	15,–	118,–
SKK 600, painted	E	815,–	225,–	1040,–
Lid, galvanized	E	173,–	20,–	193,–
Castor Set, polyamide, Load capacity 1050 kg / castor set	A	136,–	15,–	151,–
Castor Set, solid rubber, Load capacity 615 kg / castor set	E	103,–	15,–	118,–
SKK 600, hot-dip galvanized	E	914,–	225,–	1139,–
Lid, galvanized	E	173,–	20,–	193,–
Castor Set, polyamide, Load capacity 1050 kg / castor set	A	136,–	15,–	151,–
Castor Set, solid rubber, Load capacity 615 kg / castor set	E	103,–	15,–	118,–
SKK 800, painted	E	872,–	225,–	1097,–
Lid, galvanized	E	181,–	21,–	202,–
Castor Set, polyamide, Load capacity 1050 kg / castor set	A	136,–	15,–	151,–
Castor Set, solid rubber, Load capacity 615 kg / castor set	E	103,–	15,–	118,–
SKK 800, hot-dip galvanized	E	980,–	225,–	1205,–
Lid, galvanized	E	181,–	21,–	202,–
Castor Set, polyamide, Load capacity 1050 kg / castor set	A	136,–	15,–	151,–
Castor Set, solid rubber, Load capacity 615 kg / castor set	E	103,–	15,–	118,–
SKK 1000, painted	E	930,–	225,–	1155,–
Lid, galvanized	E	193,–	22,–	215,–
Castor Set, polyamide, Load capacity 1050 kg / castor set	A	136,–	15,–	151,–
Castor Set, solid rubber, Load capacity 615 kg / castor set	E	103,–	15,–	118,–
SKK 1000, hot-dip galvanized	E	1063,–	225,–	1288,–
Lid, galvanized	E	193,–	22,–	215,–
Castor Set, polyamide, Load capacity 1050 kg / castor set	A	136,–	15,–	151,–
Castor Set, solid rubber, Load capacity 615 kg / castor set	E	103,–	15,–	118,–

Swarf Tilting Container Type SKM	Category	Price	Freight charges	Price including freight charges
SKM 30, painted	A	950,–	225,–	1175,–
Lid, galvanized	A	104,–	18,–	122,–
SKM 30, hot-dip galvanized	A	1148,–	225,–	1373,–
Lid, galvanized	A	104,–	18,–	122,–
SKM 50, painted	A	1220,–	225,–	1445,–
Lid, galvanized	A	158,–	28,–	186,–
SKM 50, hot-dip galvanized	A	1478,–	225,–	1703,–
Lid, galvanized	A	158,–	28,–	186,–
SKM 75, painted	A	1469,–	225,–	1694,–
Lid, galvanized	A	175,–	33,–	208,–
SKM 75, hot-dip galvanized	A	1790,–	327,–	2117,–
Lid, galvanized	A	175,–	33,–	208,–

Prices in EUR, valid EXW DE-46354 Südlohn, DE-38820 Halberstadt, unpacked
Freight charges valid CPT Portugal, islands and oversea territories excluded

BAUER GmbH
Eichendorffstr. 62
46354 Südlohn, Germany

Tel. +49 2862 70 90
info@bauer-suedlohn.com
www.bauer-suedlohn.com

Geschäftsführer
Patrick Bauer, Pascal Bauer
Amtsgericht Coesfeld HRB 5259

TÜVNORD
TÜV NORD CERT GmbH
DIN EN ISO 9001
tuev-nord.de

Price List 0726 en-PT
Forklift Truck Attachments

Swarf Tipping Skip Type SKN	Category	Price	Freight charges	Price including freight charges
SKN 250, painted	E	534,–	141,–	675,–
Lid, galvanized	E	136,–	15,–	151,–
Castor Set, polyamide, Load capacity 1050 kg / castor set	A	136,–	15,–	151,–
Castor Set, solid rubber, Load capacity 615 kg / castor set	E	103,–	15,–	118,–
SKN 250, hot-dip galvanized	E	583,–	141,–	724,–
Lid, galvanized	E	136,–	15,–	151,–
Castor Set, polyamide, Load capacity 1050 kg / castor set	A	136,–	15,–	151,–
Castor Set, solid rubber, Load capacity 615 kg / castor set	E	103,–	15,–	118,–
SKN 400, painted	E	600,–	141,–	741,–
Lid, galvanized	E	156,–	16,–	172,–
Castor Set, polyamide, Load capacity 1050 kg / castor set	A	136,–	15,–	151,–
Castor Set, solid rubber, Load capacity 615 kg / castor set	E	103,–	15,–	118,–
SKN 400, hot-dip galvanized	E	649,–	141,–	790,–
Lid, galvanized	E	156,–	16,–	172,–
Castor Set, polyamide, Load capacity 1050 kg / castor set	A	136,–	15,–	151,–
Castor Set, solid rubber, Load capacity 615 kg / castor set	E	103,–	15,–	118,–

Swarf Tipping Skip Type SKS	Category	Price	Freight charges	Price including freight charges
SKS 400, painted	E	946,–	225,–	1171,–
SKS 550, painted	E	1013,–	225,–	1238,–
SKS 700, painted	E	1072,–	225,–	1297,–

Swarf Barrow Tipper Type SKW-ET	Category	Price	Freight charges	Price including freight charges
SKW-ET 250, painted	E	638,–	141,–	779,–
Lid, galvanized	E	136,–	15,–	151,–
SKW-ET 250, hot-dip galvanized	E	975,–	141,–	1116,–
Lid, galvanized	E	136,–	15,–	151,–
SKW-ET 400, painted	E	697,–	141,–	838,–
Lid, galvanized	E	156,–	16,–	172,–
SKW-ET 400, hot-dip galvanized	E	1071,–	141,–	1212,–
Lid, galvanized	E	156,–	16,–	172,–
SKW-ET 600, painted	E	851,–	225,–	1076,–
Lid, galvanized	E	173,–	20,–	193,–
SKW-ET 600, hot-dip galvanized	E	1233,–	225,–	1458,–
Lid, galvanized	E	173,–	20,–	193,–
SKW-ET 1000, painted	E	1032,–	225,–	1257,–
Lid, galvanized	E	193,–	22,–	215,–
SKW-ET 1000, hot-dip galvanized	E	1643,–	225,–	1868,–
Lid, galvanized	E	193,–	22,–	215,–

Mini Swarf Tilting Container Type SMGU	Category	Price	Freight charges	Price including freight charges
SMGU 230, painted	A	689,–	141,–	830,–
Lid, galvanized	A	131,–	18,–	149,–
Castor Set, polyamide, Load capacity 1050 kg / castor set	A	156,–	15,–	171,–
SMGU 230, hot-dip galvanized	A	775,–	225,–	1000,–

Prices in EUR, valid EXW DE-46354 Südlohn, DE-38820 Halberstadt, unpacked
Freight charges valid CPT Portugal, islands and oversea territories excluded

BAUER GmbH
Eichendorffstr. 62
46354 Südlohn, Germany

Tel. +49 2862 70 90
info@bauer-suedlohn.com
www.bauer-suedlohn.com

Geschäftsführer
Patrick Bauer, Pascal Bauer
Amtsgericht Coesfeld HRB 5259

TÜVNORD
TÜV NORD CERT GmbH
DIN EN ISO 9001
tuev-nord.de

Price List 0726 en-PT
Forklift Truck Attachments

Mini Swarf Tilting Container Type SMGU	Category	Price	Freight charges	Price including freight charges
Lid, galvanized	A	131,–	18,–	149,–
Castor Set, polyamide, Load capacity 1050 kg / castor set	A	156,–	15,–	171,–
SMGU 270, painted	A	744,–	225,–	969,–
Lid, galvanized	A	131,–	18,–	149,–
Castor Set, polyamide, Load capacity 1050 kg / castor set	A	156,–	15,–	171,–
SMGU 270, hot-dip galvanized	A	850,–	225,–	1075,–
Lid, galvanized	A	131,–	18,–	149,–
Castor Set, polyamide, Load capacity 1050 kg / castor set	A	156,–	15,–	171,–
SMGU 460, painted	A	935,–	225,–	1160,–
Lid, galvanized	A	169,–	22,–	191,–
Castor Set, polyamide, Load capacity 1050 kg / castor set	A	156,–	15,–	171,–
SMGU 460, hot-dip galvanized	A	1088,–	225,–	1313,–
Lid, galvanized	A	169,–	22,–	191,–
Castor Set, polyamide, Load capacity 1050 kg / castor set	A	156,–	15,–	171,–
SMGU 610, painted	A	1041,–	225,–	1266,–
Lid, galvanized	A	181,–	26,–	207,–
Castor Set, polyamide, Load capacity 1050 kg / castor set	A	156,–	15,–	171,–
SMGU 610, hot-dip galvanized	A	1209,–	225,–	1434,–
Lid, galvanized	A	181,–	26,–	207,–
Castor Set, polyamide, Load capacity 1050 kg / castor set	A	156,–	15,–	171,–

Silo Container Type SR	Category	Price	Freight charges	Price including freight charges
SR 375, painted	E	844,–	141,–	985,–
Lid, galvanized	E	131,–	33,–	164,–
SR 375, hot-dip galvanized	E	1584,–	141,–	1725,–
Lid, galvanized	E	131,–	33,–	164,–
SR 600, painted	E	1048,–	225,–	1273,–
Lid, galvanized	E	131,–	33,–	164,–
SR 600, hot-dip galvanized	E	1801,–	225,–	2026,–
Lid, galvanized	E	131,–	33,–	164,–

Silo Container Type SR-D	Category	Price	Freight charges	Price including freight charges
SR-D 375, painted	E	844,–	141,–	985,–
Lid, galvanized	E	131,–	33,–	164,–
SR-D 375, hot-dip galvanized	E	1584,–	141,–	1725,–
Lid, galvanized	E	131,–	33,–	164,–
SR-D 600, painted	E	1048,–	225,–	1273,–
Lid, galvanized	E	131,–	33,–	164,–
SR-D 600, hot-dip galvanized	E	1801,–	225,–	2026,–
Lid, galvanized	E	131,–	33,–	164,–

Silo Container Type SRE	Category	Price	Freight charges	Price including freight charges
SRE 375, painted	E	962,–	225,–	1187,–
Lid, galvanized	E	131,–	33,–	164,–
SRE 375, hot-dip galvanized	E	1723,–	225,–	1948,–

Prices in EUR, valid EXW DE-46354 Südlohn, DE-38820 Halberstadt, unpacked
Freight charges valid CPT Portugal, islands and oversea territories excluded

BAUER GmbH
Eichendorffstr. 62
46354 Südlohn, Germany

Tel. +49 2862 70 90
info@bauer-suedlohn.com
www.bauer-suedlohn.com

Geschäftsführer
Patrick Bauer, Pascal Bauer
Amtsgericht Coesfeld HRB 5259

TÜVNORD
TÜV NORD CERT GmbH
DIN EN ISO 9001
tuev-nord.de

Price List 0726 en-PT
Forklift Truck Attachments

Silo Container Type SRE	Category	Price	Freight charges	Price including freight charges
Lid, galvanized	E	131,–	33,–	164,–
SRE 600, painted	E	1171,–	225,–	1396,–
Lid, galvanized	E	131,–	33,–	164,–
SRE 600, hot-dip galvanized	E	1857,–	225,–	2082,–
Lid, galvanized	E	131,–	33,–	164,–

Silo Container Type SRE-D	Category	Price	Freight charges	Price including freight charges
SRE-D 375, painted	E	962,–	141,–	1103,–
Lid, galvanized	E	131,–	33,–	164,–
SRE-D 375, hot-dip galvanized	E	1723,–	225,–	1948,–
Lid, galvanized	E	131,–	33,–	164,–
SRE-D 600, painted	E	1171,–	225,–	1396,–
Lid, galvanized	E	131,–	33,–	164,–
SRE-D 600, hot-dip galvanized	E	1857,–	225,–	2082,–
Lid, galvanized	E	131,–	33,–	164,–

Forklift Tender System Type STS	Category	Price	Freight charges	Price including freight charges
STS 2,5, painted	C	3857,–	on request	on request
STS 5,0, painted	C	4546,–	on request	on request

Spreader Type STW	Category	Price	Freight charges	Price including freight charges
STW 100, painted	A	1216,–	141,–	1357,–
Tarpaulin	A	116,–	10,–	126,–
STW 260, painted	A	2147,–	141,–	2288,–
Tarpaulin	A	122,–	10,–	132,–

Traverse for Big Bags Type TBB	Category	Price	Freight charges	Price including freight charges
TBB, painted	A	901,–	141,–	1042,–

Traverse For Big Bags Type TBB-E	Category	Price	Freight charges	Price including freight charges
TBB-E, painted	A	852,–	141,–	993,–

Traverse For Big Bags Type TBB-W	Category	Price	Freight charges	Price including freight charges
TBB-W, painted	A	1093,–	141,–	1234,–

Mini Lifting Beam Type TM	Category	Price	Freight charges	Price including freight charges
TM 200-500, hot-dip galvanized	F	399,–	60,–	459,–
TM 400-800, hot-dip galvanized	F	429,–	60,–	489,–
TM 800-1200, hot-dip galvanized	F	566,–	60,–	626,–

Tilting Container Type TRIO	Category	Price	Freight charges	Price including freight charges
TRIO, painted	A	2333,–	398,–	2731,–
Lid, galvanized	A	215,–	26,–	241,–
Castor Set, polyamide, Load capacity 1350 kg / castor set	A	192,–	15,–	207,–

Prices in EUR, valid EXW DE-46354 Südlohn, DE-38820 Halberstadt, unpacked
Freight charges valid CPT Portugal, islands and oversea territories excluded

BAUER GmbH
Eichendorffstr. 62
46354 Südlohn, Germany

Tel. +49 2862 70 90
info@bauer-suedlohn.com
www.bauer-suedlohn.com

Geschäftsführer
Patrick Bauer, Pascal Bauer
Amtsgericht Coesfeld HRB 5259

TÜVNORD
TÜV NORD CERT GmbH
DIN EN ISO 9001
tuev-nord.de

Price List 0726 en-PT
Forklift Truck Attachments

Tilting Container Type TRIO	Category	Price	Freight charges	Price including freight charges
Set of 5 self-adhesive stickers with symbols for: glass, paper, plastic, metal, residual waste	A	29,–	on request	on request

Universal Container Type UC	Category	Price	Freight charges	Price including freight charges
UC 500, painted	A	675,–	141,–	816,–
Lid, galvanized	A	168,–	16,–	184,–
Castor Set, polyamide, Load capacity 1350 kg / castor set	A	192,–	15,–	207,–
Pick-up Profile on Type UC for Traverse Type UCT	A	106,–	0,–	106,–
UC 500, hot-dip galvanized	A	771,–	225,–	996,–
Lid, galvanized	A	168,–	16,–	184,–
Castor Set, polyamide, Load capacity 1350 kg / castor set	A	192,–	15,–	207,–
Pick-up Profile on Type UC for Traverse Type UCT	A	106,–	0,–	106,–
UC 750, painted	A	734,–	225,–	959,–
Lid, galvanized	A	168,–	16,–	184,–
Castor Set, polyamide, Load capacity 1350 kg / castor set	A	192,–	15,–	207,–
Pick-up Profile on Type UC for Traverse Type UCT	A	106,–	0,–	106,–
UC 750, hot-dip galvanized	A	853,–	225,–	1078,–
Lid, galvanized	A	168,–	16,–	184,–
Castor Set, polyamide, Load capacity 1350 kg / castor set	A	192,–	15,–	207,–
Pick-up Profile on Type UC for Traverse Type UCT	A	106,–	0,–	106,–
UC 1000, painted	A	771,–	225,–	996,–
Lid, galvanized	A	168,–	16,–	184,–
Castor Set, polyamide, Load capacity 1350 kg / castor set	A	192,–	15,–	207,–
Pick-up Profile on Type UC for Traverse Type UCT	A	106,–	0,–	106,–
UC 1000, hot-dip galvanized	A	894,–	225,–	1119,–
Lid, galvanized	A	168,–	16,–	184,–
Castor Set, polyamide, Load capacity 1350 kg / castor set	A	192,–	15,–	207,–
Pick-up Profile on Type UC for Traverse Type UCT	A	106,–	0,–	106,–

Hydraulic Traverse Type UCT	Category	Price	Freight charges	Price including freight charges
UCT, painted	A	2737,–	327,–	3064,–

Tilting Container Type VD	Category	Price	Freight charges	Price including freight charges
VD 500, painted	A	794,–	225,–	1019,–
Lid, galvanized	A	144,–	18,–	162,–
Castor Set, polyamide, Load capacity 1350 kg / castor set	A	192,–	15,–	207,–
Skip Body Welded Oil and Watertight	A	78,–	0,–	78,–
VD 500, hot-dip galvanized	A	1033,–	225,–	1258,–
Lid, galvanized	A	144,–	18,–	162,–
Castor Set, polyamide, Load capacity 1350 kg / castor set	A	192,–	15,–	207,–
Skip Body Welded Oil and Watertight	A	78,–	0,–	78,–
VD 650, painted	A	868,–	225,–	1093,–
Lid, galvanized	A	144,–	18,–	162,–
Castor Set, polyamide, Load capacity 1350 kg / castor set	A	192,–	15,–	207,–
Skip Body Welded Oil and Watertight	A	78,–	0,–	78,–
VD 650, hot-dip galvanized	A	1130,–	225,–	1355,–

Prices in EUR, valid EXW DE-46354 Südlohn, DE-38820 Halberstadt, unpacked
Freight charges valid CPT Portugal, islands and oversea territories excluded

BAUER GmbH
Eichendorffstr. 62
46354 Südlohn, Germany

Tel. +49 2862 70 90
info@bauer-suedlohn.com
www.bauer-suedlohn.com

Geschäftsführer
Patrick Bauer, Pascal Bauer
Amtsgericht Coesfeld HRB 5259

TÜVNORD
TÜV NORD CERT GmbH
DIN EN ISO 9001
tuev-nord.de

Price List 0726 en-PT
Forklift Truck Attachments

Tilting Container Type VD	Category	Price	Freight charges	Price including freight charges
Lid, galvanized	A	144,–	18,–	162,–
Castor Set, polyamide, Load capacity 1350 kg / castor set	A	192,–	15,–	207,–
Skip Body Welded Oil and Watertight	A	78,–	0,–	78,–
VD 800, painted	A	991,–	225,–	1216,–
Lid, galvanized	A	174,–	22,–	196,–
Castor Set, polyamide, Load capacity 1350 kg / castor set	A	192,–	15,–	207,–
Skip Body Welded Oil and Watertight	A	78,–	0,–	78,–
VD 800, hot-dip galvanized	A	1346,–	225,–	1571,–
Lid, galvanized	A	174,–	22,–	196,–
Castor Set, polyamide, Load capacity 1350 kg / castor set	A	192,–	15,–	207,–
Skip Body Welded Oil and Watertight	A	78,–	0,–	78,–
VD 1000, painted	A	1041,–	225,–	1266,–
Lid, galvanized	A	174,–	22,–	196,–
Castor Set, polyamide, Load capacity 1350 kg / castor set	A	192,–	15,–	207,–
Skip Body Welded Oil and Watertight	A	121,–	0,–	121,–
VD 1000, hot-dip galvanized	A	1469,–	225,–	1694,–
Lid, galvanized	A	174,–	22,–	196,–
Castor Set, polyamide, Load capacity 1350 kg / castor set	A	192,–	15,–	207,–
Skip Body Welded Oil and Watertight	A	121,–	0,–	121,–

Tilting Container Type VG	Category	Price	Freight charges	Price including freight charges
VG 550, painted	A	812,–	225,–	1037,–
Lid, galvanized	A	144,–	18,–	162,–
Castor Set, polyamide, Load capacity 1350 kg / castor set	A	192,–	15,–	207,–
Skip Body Welded Oil and Watertight	A	78,–	0,–	78,–
VG 550, hot-dip galvanized	A	1058,–	225,–	1283,–
Lid, galvanized	A	144,–	18,–	162,–
Castor Set, polyamide, Load capacity 1350 kg / castor set	A	192,–	15,–	207,–
Skip Body Welded Oil and Watertight	A	78,–	0,–	78,–
VG 700, painted	A	962,–	225,–	1187,–
Lid, galvanized	A	144,–	18,–	162,–
Castor Set, polyamide, Load capacity 1350 kg / castor set	A	192,–	15,–	207,–
Skip Body Welded Oil and Watertight	A	78,–	0,–	78,–
VG 700, hot-dip galvanized	A	1252,–	225,–	1477,–
Lid, galvanized	A	144,–	18,–	162,–
Castor Set, polyamide, Load capacity 1350 kg / castor set	A	192,–	15,–	207,–
Skip Body Welded Oil and Watertight	A	78,–	0,–	78,–
VG 900, painted	A	1060,–	225,–	1285,–
Lid, galvanized	A	174,–	22,–	196,–
Castor Set, polyamide, Load capacity 1350 kg / castor set	A	192,–	15,–	207,–
Skip Body Welded Oil and Watertight	A	78,–	0,–	78,–
VG 900, hot-dip galvanized	A	1502,–	225,–	1727,–
Lid, galvanized	A	174,–	22,–	196,–
Castor Set, polyamide, Load capacity 1350 kg / castor set	A	192,–	15,–	207,–
Skip Body Welded Oil and Watertight	A	78,–	0,–	78,–
VG 1100, painted	A	1150,–	225,–	1375,–

Prices in EUR, valid EXW DE-46354 Südlohn, DE-38820 Halberstadt, unpacked
Freight charges valid CPT Portugal, islands and oversea territories excluded

BAUER GmbH
Eichendorffstr. 62
46354 Südlohn, Germany

Tel. +49 2862 70 90
info@bauer-suedlohn.com
www.bauer-suedlohn.com

Geschäftsführer
Patrick Bauer, Pascal Bauer
Amtsgericht Coesfeld HRB 5259

TÜVNORD
TÜV NORD CERT GmbH
DIN EN ISO 9001
tuev-nord.de

Price List 0726 en-PT
Forklift Truck Attachments

Tilting Container Type VG	Category	Price	Freight charges	Price including freight charges
Lid, galvanized	A	174,–	22,–	196,–
Castor Set, polyamide, Load capacity 1350 kg / castor set	A	192,–	15,–	207,–
Skip Body Welded Oil and Watertight	A	121,–	0,–	121,–
VG 1100, hot-dip galvanized	A	1561,–	225,–	1786,–
Lid, galvanized	A	174,–	22,–	196,–
Castor Set, polyamide, Load capacity 1350 kg / castor set	A	192,–	15,–	207,–
Skip Body Welded Oil and Watertight	A	121,–	0,–	121,–

Prices in EUR, valid EXW DE-46354 Südlohn, DE-38820 Halberstadt, unpacked
Freight charges valid CPT Portugal, islands and oversea territories excluded

BAUER GmbH
Eichendorffstr. 62
46354 Südlohn, Germany

Tel. +49 2862 70 90
info@bauer-suedlohn.com
www.bauer-suedlohn.com

Geschäftsführer
Patrick Bauer, Pascal Bauer
Amtsgericht Coesfeld HRB 5259

TÜVNORD
TÜV NORD CERT GmbH
DIN EN ISO 9001
tuev-nord.de

Price List 0726 en-PT
Workspace Material Handling

Battery Charging Station Type BL	Category	Price	Freight charges	Price including freight charges
BL 1, painted	A	1422,–	141,–	1563,–
Fire Extinguisher	A	204,–	14,–	218,–
Storage tray for water receptacle, painted	A	64,–	13,–	77,–
BL 2, painted	A	1798,–	141,–	1939,–
Fire Extinguisher	A	204,–	14,–	218,–
Storage tray for water receptacle, painted	A	64,–	13,–	77,–
BL 3, painted	A	1798,–	141,–	1939,–
Fire Extinguisher	A	204,–	14,–	218,–
Storage tray for water receptacle, painted	A	64,–	13,–	77,–

Drum Jack Roller Type FHR	Category	Price	Freight charges	Price including freight charges
FHR 600 F, painted	B	3286,–	327,–	3613,–
FHR 600 F, hot-dip galvanized	B	3641,–	327,–	3968,–
FHR 600 G, painted	B	2617,–	225,–	2842,–
FHR 600 G, hot-dip galvanized	B	2888,–	225,–	3113,–
FHR 600 K, painted	B	2617,–	225,–	2842,–
FHR 600 K, hot-dip galvanized	B	2888,–	225,–	3113,–

Drum Trolley Type FP-L	Category	Price	Freight charges	Price including freight charges
FP-L, galvanized	C	624,–	141,–	765,–

Drum Trolley Type FP-V	Category	Price	Freight charges	Price including freight charges
FP-V, galvanized	C	605,–	141,–	746,–

Drum Dolly Type FRW	Category	Price	Freight charges	Price including freight charges
FRW-I, hot-dip galvanized	A	116,–	60,–	176,–
FRW-II, hot-dip galvanized	A	154,–	60,–	214,–
FRW-III, hot-dip galvanized	A	207,–	141,–	348,–

Dolly Type GRW	Category	Price	Freight charges	Price including freight charges
GRW-I, hot-dip galvanized	F	126,–	60,–	186,–
Handle, hot-dip galvanized	F	55,–	10,–	65,–
GRW-II, hot-dip galvanized	F	143,–	60,–	203,–
Handle, hot-dip galvanized	F	55,–	10,–	65,–
GRW-III, hot-dip galvanized	F	179,–	141,–	320,–
Handle, hot-dip galvanized	F	55,–	10,–	65,–

Gas Cylinder Wall Bracket Type GWH	Category	Price	Freight charges	Price including freight charges
GWH 140-I, hot-dip galvanized	F	26,–	60,–	86,–
GWH 140-II, hot-dip galvanized	F	40,–	60,–	100,–

Prices in EUR, valid EXW DE-46354 Südlohn, DE-38820 Halberstadt, unpacked
Freight charges valid CPT Portugal, islands and oversea territories excluded

BAUER GmbH
Eichendorffstr. 62
46354 Südlohn, Germany

Tel. +49 2862 70 90
info@bauer-suedlohn.com
www.bauer-suedlohn.com

Geschäftsführer
Patrick Bauer, Pascal Bauer
Amtsgericht Coesfeld HRB 5259

TÜVNORD
TÜV NORD CERT GmbH
DIN EN ISO 9001
tuev-nord.de

Price List 0726 en-PT
Workspace Material Handling

Gas Cylinder Wall Bracket Type GWH	Category	Price	Freight charges	Price including freight charges
GWH 140-III, hot-dip galvanized	F	59,–	60,–	119,–
GWH 230-I, hot-dip galvanized	F	28,–	60,–	88,–
GWH 230-II, hot-dip galvanized	F	43,–	60,–	103,–
GWH 230-III, hot-dip galvanized	F	65,–	60,–	125,–
GWH 320-I, hot-dip galvanized	F	29,–	60,–	89,–
GWH 320-II, hot-dip galvanized	F	48,–	60,–	108,–
GWH 320-III, hot-dip galvanized	F	72,–	60,–	132,–

Fork Lifter Type GZH-A	Category	Price	Freight charges	Price including freight charges
GZH-A, painted	F	114,–	60,–	174,–

Fork Lifter Type GZH-B	Category	Price	Freight charges	Price including freight charges
GZH-B, painted	F	114,–	60,–	174,–

Fork Pallet Type GZP	Category	Price	Freight charges	Price including freight charges
GZP 4, hot-dip galvanized	A	161,–	141,–	302,–
GZP 8, hot-dip galvanized	A	201,–	141,–	342,–

IBC Residue Drainer Type IR	Category	Price	Freight charges	Price including freight charges
IR-1, hot-dip galvanized	A	596,–	141,–	737,–
IR-2, hot-dip galvanized	A	711,–	141,–	852,–
IR-3, hot-dip galvanized	A	596,–	141,–	737,–

Tilting Canister Stand Type KAH	Category	Price	Freight charges	Price including freight charges
KAH-5, galvanized	A	96,–	60,–	156,–
KAH-25, galvanized	A	109,–	60,–	169,–
KAH-60, galvanized	A	140,–	60,–	200,–

Sheet Metal Storage Units With Trays Type KBR	Category	Price	Freight charges	Price including freight charges
KBR 1, painted	A	5985,–	905,–	6890,–
KBR 2, painted	A	6207,–	on request	on request
KBR 3, painted	A	6667,–	on request	on request

Liftomat Type L/E	Category	Price	Freight charges	Price including freight charges
L/E 1300, painted	B	4908,–	327,–	5235,–
L/E 1300, hot-dip galvanized	B	5578,–	327,–	5905,–

Liftomat Type L/M	Category	Price	Freight charges	Price including freight charges
L/M 600, painted	B	3553,–	225,–	3778,–
L/M 600, hot-dip galvanized	B	4025,–	225,–	4250,–
L/M 1300, painted	B	3986,–	327,–	4313,–
L/M 1300, hot-dip galvanized	B	4569,–	327,–	4896,–

Prices in EUR, valid EXW DE-46354 Südlohn, DE-38820 Halberstadt, unpacked
Freight charges valid CPT Portugal, islands and oversea territories excluded

BAUER GmbH
Eichendorffstr. 62
46354 Südlohn, Germany

Tel. +49 2862 70 90
info@bauer-suedlohn.com
www.bauer-suedlohn.com

Geschäftsführer
Patrick Bauer, Pascal Bauer
Amtsgericht Coesfeld HRB 5259

TÜVNORD
TÜV NORD CERT GmbH
DIN EN ISO 9001
tuev-nord.de

Price List 0726 en-PT
Workspace Material Handling

Security Cage for Storage Type LBM	Category	Price	Freight charges	Price including freight charges
LBM 1500, hot-dip galvanized	A	2002,–	327,–	2329,–
LBM 3000, hot-dip galvanized	A	2747,–	567,–	3314,–
LBM 4500, hot-dip galvanized	A	3492,–	567,–	4059,–
LBM 6000, hot-dip galvanized	A	4232,–	731,–	4963,–

Wheelie Bin Tipping Station Type MKS	Category	Price	Freight charges	Price including freight charges
MKS-12V, painted	A	3745,–	225,–	3970,–
External Charger for 12 V electro-hydraulic constructions	A	201,–	15,–	216,–
MKS-230V, painted	A	3745,–	225,–	3970,–

Wheelie Bin Tipping Station Type MKS-F	Category	Price	Freight charges	Price including freight charges
MKS-F, painted	A	2459,–	225,–	2684,–

Wheelie Bin Tipping Station Type MKS-H	Category	Price	Freight charges	Price including freight charges
MKS-H, painted	A	2459,–	225,–	2684,–

Stillage Transport Cage Type MTP	Category	Price	Freight charges	Price including freight charges
MTP 2000, hot-dip galvanized	A	2196,–	327,–	2523,–
Tension belt	A	48,–	8,–	56,–
MTP 3000, hot-dip galvanized	A	2774,–	398,–	3172,–
Tension belt	A	48,–	8,–	56,–

Two-Wheeled Pallet Picker Type PZ	Category	Price	Freight charges	Price including freight charges
PZ, hot-dip galvanized	F	456,–	60,–	516,–

Tyre Fitting Equipment Type RM	Category	Price	Freight charges	Price including freight charges
RM, painted	F	458,–	60,–	518,–

Surround for Waste Bins Type SECOMAT	Category	Price	Freight charges	Price including freight charges
S 120-D, powder coated	B	682,–	141,–	823,–
S 120-K, powder coated	B	764,–	141,–	905,–
S 240-D, powder coated	B	782,–	141,–	923,–
S 240-K, powder coated	B	856,–	141,–	997,–
S1100, powder-coated	B	791,–	141,–	932,–
S1100-W, powder-coated	B	1040,–	225,–	1265,–
S1100-WT, powder-coated	B	1305,–	225,–	1530,–
S1100-WTB, powder-coated	B	1408,–	225,–	1633,–
S4USE, powder coated	C	2656,–	327,–	2983,–

Gas Cylinder Pallet Type SFP	Category	Price	Freight charges	Price including freight charges
SFP 4, hot-dip galvanized	C	346,–	141,–	487,–
SFP 8, hot-dip galvanized	C	460,–	225,–	685,–

Prices in EUR, valid EXW DE-46354 Südlohn, DE-38820 Halberstadt, unpacked
Freight charges valid CPT Portugal, islands and oversea territories excluded

BAUER GmbH
Eichendorffstr. 62
46354 Südlohn, Germany

Tel. +49 2862 70 90
info@bauer-suedlohn.com
www.bauer-suedlohn.com

Geschäftsführer
Patrick Bauer, Pascal Bauer
Amtsgericht Coesfeld HRB 5259

TÜVNORD
TÜV NORD CERT GmbH
DIN EN ISO 9001
tuev-nord.de

Price List 0726 en-PT
Workspace Material Handling

Loading Support Type VS	Category	Price	Freight charges	Price including freight charges
VS, painted	C	765,–	225,–	990,–

Prices in EUR, valid EXW DE-46354 Südlohn, DE-38820 Halberstadt, unpacked
Freight charges valid CPT Portugal, islands and oversea territories excluded

BAUER GmbH
Eichendorffstr. 62
46354 Südlohn, Germany

Tel. +49 2862 70 90
info@bauer-suedlohn.com
www.bauer-suedlohn.com

Geschäftsführer
Patrick Bauer, Pascal Bauer
Amtsgericht Coesfeld HRB 5259

TÜVNORD
TÜV NORD CERT GmbH
DIN EN ISO 9001
tuev-nord.de

Price List 0726 en-PT
Environment / Storage

Sump Trays Type SERIES 2000	Category	Price	Freight charges	Price including freight charges
2000, painted	B	250,–	141,–	391,–
2000, hot-dip galvanized	B	288,–	141,–	429,–
2002, painted	B	285,–	141,–	426,–
2002, hot-dip galvanized	B	322,–	141,–	463,–
2008, painted	B	250,–	141,–	391,–
2008, hot-dip galvanized	B	300,–	141,–	441,–
2010, painted	B	301,–	141,–	442,–
Drum Support FA 60-1, hot-dip galvanized	B	109,–	15,–	124,–
Drum Support FA 60-2, hot-dip galvanized	B	118,–	18,–	136,–
Drum Support FA 60-3, hot-dip galvanized	B	138,–	21,–	159,–
Drum Support FA 200-1, hot-dip galvanized	B	118,–	15,–	133,–
Can Shelf Type GR-A, galvanized	B	138,–	60,–	198,–
Can Shelf Type GR-B, galvanized	B	138,–	60,–	198,–
Can Shelf Type GR-C, galvanized	B	138,–	60,–	198,–
2010, hot-dip galvanized	B	351,–	141,–	492,–
Drum Support FA 60-1, hot-dip galvanized	B	109,–	15,–	124,–
Drum Support FA 60-2, hot-dip galvanized	B	118,–	18,–	136,–
Drum Support FA 60-3, hot-dip galvanized	B	138,–	21,–	159,–
Drum Support FA 200-1, hot-dip galvanized	B	118,–	15,–	133,–
Can Shelf Type GR-A, galvanized	B	138,–	60,–	198,–
Can Shelf Type GR-B, galvanized	B	138,–	60,–	198,–
Can Shelf Type GR-C, galvanized	B	138,–	60,–	198,–
2016, painted	B	262,–	141,–	403,–
2016, hot-dip galvanized	B	314,–	141,–	455,–
2018, painted	B	315,–	141,–	456,–
Drum Support FA 60-1, hot-dip galvanized	B	109,–	15,–	124,–
Drum Support FA 60-2, hot-dip galvanized	B	118,–	18,–	136,–
Drum Support FA 60-3, hot-dip galvanized	B	138,–	21,–	159,–
Drum Support FA 200-1, hot-dip galvanized	B	118,–	15,–	133,–
Can Shelf Type GR-A, galvanized	B	138,–	60,–	198,–
Can Shelf Type GR-B, galvanized	B	138,–	60,–	198,–
Can Shelf Type GR-C, galvanized	B	138,–	60,–	198,–
2018, hot-dip galvanized	B	365,–	141,–	506,–
Drum Support FA 60-1, hot-dip galvanized	B	109,–	15,–	124,–
Drum Support FA 60-2, hot-dip galvanized	B	118,–	18,–	136,–
Drum Support FA 60-3, hot-dip galvanized	B	138,–	21,–	159,–
Drum Support FA 200-1, hot-dip galvanized	B	118,–	15,–	133,–
Can Shelf Type GR-A, galvanized	B	138,–	60,–	198,–
Can Shelf Type GR-B, galvanized	B	138,–	60,–	198,–
Can Shelf Type GR-C, galvanized	B	138,–	60,–	198,–
2026, painted	B	262,–	141,–	403,–
2026, hot-dip galvanized	B	310,–	141,–	451,–

Prices in EUR, valid EXW DE-46354 Südlohn, DE-38820 Halberstadt, unpacked
Freight charges valid CPT Portugal, islands and oversea territories excluded

BAUER GmbH
Eichendorffstr. 62
46354 Südlohn, Germany

Tel. +49 2862 70 90
info@bauer-suedlohn.com
www.bauer-suedlohn.com

Geschäftsführer
Patrick Bauer, Pascal Bauer
Amtsgericht Coesfeld HRB 5259

TÜVNORD
TÜV NORD CERT GmbH
DIN EN ISO 9001
tuev-nord.de

Price List 0726 en-PT
Environment / Storage

Sump Trays Type SERIES 2000	Category	Price	Freight charges	Price including freight charges
2028, painted	B	366,–	141,–	507,–
Drum Support FA 60-1, hot-dip galvanized	B	109,–	15,–	124,–
Drum Support FA 60-2, hot-dip galvanized	B	118,–	18,–	136,–
Drum Support FA 60-3, hot-dip galvanized	B	138,–	21,–	159,–
Drum Support FA 200-1, hot-dip galvanized	B	118,–	15,–	133,–
Drum Support FA 200-2, hot-dip galvanized	B	138,–	22,–	160,–
Can Shelf Type GR-A, galvanized	B	138,–	60,–	198,–
Can Shelf Type GR-B, galvanized	B	138,–	60,–	198,–
Can Shelf Type GR-C, galvanized	B	138,–	60,–	198,–
2028, hot-dip galvanized	B	412,–	141,–	553,–
Drum Support FA 60-1, hot-dip galvanized	B	109,–	15,–	124,–
Drum Support FA 60-2, hot-dip galvanized	B	118,–	18,–	136,–
Drum Support FA 60-3, hot-dip galvanized	B	138,–	21,–	159,–
Drum Support FA 200-1, hot-dip galvanized	B	118,–	15,–	133,–
Drum Support FA 200-2, hot-dip galvanized	B	138,–	22,–	160,–
Can Shelf Type GR-A, galvanized	B	138,–	60,–	198,–
Can Shelf Type GR-B, galvanized	B	138,–	60,–	198,–
Can Shelf Type GR-C, galvanized	B	138,–	60,–	198,–
2030, painted	B	275,–	141,–	416,–
2030, hot-dip galvanized	B	321,–	141,–	462,–
2032, painted	B	378,–	141,–	519,–
Drum Support FA 60-1, hot-dip galvanized	B	109,–	15,–	124,–
Drum Support FA 60-2, hot-dip galvanized	B	118,–	18,–	136,–
Drum Support FA 60-3, hot-dip galvanized	B	138,–	21,–	159,–
Drum Support FA 200-1, hot-dip galvanized	B	118,–	15,–	133,–
Drum Support FA 200-2, hot-dip galvanized	B	138,–	22,–	160,–
Can Shelf Type GR-A, galvanized	B	138,–	60,–	198,–
Can Shelf Type GR-B, galvanized	B	138,–	60,–	198,–
Can Shelf Type GR-C, galvanized	B	138,–	60,–	198,–
2032, hot-dip galvanized	B	426,–	141,–	567,–
Drum Support FA 60-1, hot-dip galvanized	B	109,–	15,–	124,–
Drum Support FA 60-2, hot-dip galvanized	B	118,–	18,–	136,–
Drum Support FA 60-3, hot-dip galvanized	B	138,–	21,–	159,–
Drum Support FA 200-1, hot-dip galvanized	B	118,–	15,–	133,–
Drum Support FA 200-2, hot-dip galvanized	B	138,–	22,–	160,–
Can Shelf Type GR-A, galvanized	B	138,–	60,–	198,–
Can Shelf Type GR-B, galvanized	B	138,–	60,–	198,–
Can Shelf Type GR-C, galvanized	B	138,–	60,–	198,–
2040, painted	B	351,–	141,–	492,–
2040, hot-dip galvanized	B	426,–	141,–	567,–
2042, painted	B	455,–	225,–	680,–
Drum Support FA 60-1, hot-dip galvanized	B	109,–	15,–	124,–
Drum Support FA 60-2, hot-dip galvanized	B	118,–	18,–	136,–
Drum Support FA 60-3, hot-dip galvanized	B	138,–	21,–	159,–
Can Shelf Type GR-A, galvanized	B	138,–	60,–	198,–
Can Shelf Type GR-B, galvanized	B	138,–	60,–	198,–

Prices in EUR, valid EXW DE-46354 Südlohn, DE-38820 Halberstadt, unpacked
Freight charges valid CPT Portugal, islands and oversea territories excluded

BAUER GmbH
Eichendorffstr. 62
46354 Südlohn, Germany

Tel. +49 2862 70 90
info@bauer-suedlohn.com
www.bauer-suedlohn.com

Geschäftsführer
Patrick Bauer, Pascal Bauer
Amtsgericht Coesfeld HRB 5259

TÜVNORD
TÜV NORD CERT GmbH
DIN EN ISO 9001
tuev-nord.de

Price List 0726 en-PT
Environment / Storage

Sump Trays Type SERIES 2000	Category	Price	Freight charges	Price including freight charges
Can Shelf Type GR-C, galvanized	B	138,–	60,–	198,–
2042, hot-dip galvanized	B	529,–	225,–	754,–
Drum Support FA 60-1, hot-dip galvanized	B	109,–	15,–	124,–
Drum Support FA 60-2, hot-dip galvanized	B	118,–	18,–	136,–
Drum Support FA 60-3, hot-dip galvanized	B	138,–	21,–	159,–
Can Shelf Type GR-A, galvanized	B	138,–	60,–	198,–
Can Shelf Type GR-B, galvanized	B	138,–	60,–	198,–
Can Shelf Type GR-C, galvanized	B	138,–	60,–	198,–
2048, painted	B	271,–	141,–	412,–
2048, hot-dip galvanized	B	316,–	141,–	457,–
2050, painted	B	369,–	141,–	510,–
Drum Support FA 60-1, hot-dip galvanized	B	109,–	15,–	124,–
Drum Support FA 60-2, hot-dip galvanized	B	118,–	18,–	136,–
Drum Support FA 60-3, hot-dip galvanized	B	138,–	21,–	159,–
Can Shelf Type GR-A, galvanized	B	138,–	60,–	198,–
Can Shelf Type GR-B, galvanized	B	138,–	60,–	198,–
Can Shelf Type GR-C, galvanized	B	138,–	60,–	198,–
2050, hot-dip galvanized	B	414,–	141,–	555,–
Drum Support FA 60-1, hot-dip galvanized	B	109,–	15,–	124,–
Drum Support FA 60-2, hot-dip galvanized	B	118,–	18,–	136,–
Drum Support FA 60-3, hot-dip galvanized	B	138,–	21,–	159,–
Can Shelf Type GR-A, galvanized	B	138,–	60,–	198,–
Can Shelf Type GR-B, galvanized	B	138,–	60,–	198,–
Can Shelf Type GR-C, galvanized	B	138,–	60,–	198,–

Sump Trays Type SERIES 2000/SW	Category	Price	Freight charges	Price including freight charges
2002/SW, painted	B	427,–	141,–	568,–
2002/SW, hot-dip galvanized	B	464,–	141,–	605,–
2018/SW, painted	B	468,–	225,–	693,–
Drum Support FA 60-1, hot-dip galvanized	B	109,–	15,–	124,–
Drum Support FA 60-2, hot-dip galvanized	B	118,–	18,–	136,–
Drum Support FA 60-3, hot-dip galvanized	B	138,–	21,–	159,–
Drum Support FA 200-1, hot-dip galvanized	B	118,–	15,–	133,–
Can Shelf Type GR-A, galvanized	B	138,–	60,–	198,–
Can Shelf Type GR-B, galvanized	B	138,–	60,–	198,–
Can Shelf Type GR-C, galvanized	B	138,–	60,–	198,–
2018/SW, hot-dip galvanized	B	517,–	225,–	742,–
Drum Support FA 60-1, hot-dip galvanized	B	109,–	15,–	124,–
Drum Support FA 60-2, hot-dip galvanized	B	118,–	18,–	136,–
Drum Support FA 60-3, hot-dip galvanized	B	138,–	21,–	159,–
Drum Support FA 200-1, hot-dip galvanized	B	118,–	15,–	133,–
Can Shelf Type GR-A, galvanized	B	138,–	60,–	198,–
Can Shelf Type GR-B, galvanized	B	138,–	60,–	198,–
Can Shelf Type GR-C, galvanized	B	138,–	60,–	198,–
2032/SW, painted	B	552,–	225,–	777,–
Drum Support FA 60-1, hot-dip galvanized	B	109,–	15,–	124,–

Prices in EUR, valid EXW DE-46354 Südlohn, DE-38820 Halberstadt, unpacked
Freight charges valid CPT Portugal, islands and oversea territories excluded

BAUER GmbH
Eichendorffstr. 62
46354 Südlohn, Germany

Tel. +49 2862 70 90
info@bauer-suedlohn.com
www.bauer-suedlohn.com

Geschäftsführer
Patrick Bauer, Pascal Bauer
Amtsgericht Coesfeld HRB 5259

TÜVNORD
TÜV NORD CERT GmbH
DIN EN ISO 9001
tuev-nord.de

Price List 0726 en-PT
Environment / Storage

Sump Trays Type SERIES 2000/SW	Category	Price	Freight charges	Price including freight charges
Drum Support FA 60-2, hot-dip galvanized	B	118,–	18,–	136,–
Drum Support FA 60-3, hot-dip galvanized	B	138,–	21,–	159,–
Drum Support FA 200-1, hot-dip galvanized	B	118,–	15,–	133,–
Drum Support FA 200-2, hot-dip galvanized	B	138,–	22,–	160,–
Can Shelf Type GR-A, galvanized	B	138,–	60,–	198,–
Can Shelf Type GR-B, galvanized	B	138,–	60,–	198,–
Can Shelf Type GR-C, galvanized	B	138,–	60,–	198,–
2032/SW, hot-dip galvanized	B	600,–	225,–	825,–
Drum Support FA 60-1, hot-dip galvanized	B	109,–	15,–	124,–
Drum Support FA 60-2, hot-dip galvanized	B	118,–	18,–	136,–
Drum Support FA 60-3, hot-dip galvanized	B	138,–	21,–	159,–
Drum Support FA 200-1, hot-dip galvanized	B	118,–	15,–	133,–
Drum Support FA 200-2, hot-dip galvanized	B	138,–	22,–	160,–
Can Shelf Type GR-A, galvanized	B	138,–	60,–	198,–
Can Shelf Type GR-B, galvanized	B	138,–	60,–	198,–
Can Shelf Type GR-C, galvanized	B	138,–	60,–	198,–
2042/SW, painted	B	685,–	278,–	963,–
Drum Support FA 60-1, hot-dip galvanized	B	109,–	15,–	124,–
Drum Support FA 60-2, hot-dip galvanized	B	118,–	18,–	136,–
Drum Support FA 60-3, hot-dip galvanized	B	138,–	21,–	159,–
Can Shelf Type GR-A, galvanized	B	138,–	60,–	198,–
Can Shelf Type GR-B, galvanized	B	138,–	60,–	198,–
Can Shelf Type GR-C, galvanized	B	138,–	60,–	198,–
2042/SW, hot-dip galvanized	B	760,–	278,–	1038,–
Drum Support FA 60-1, hot-dip galvanized	B	109,–	15,–	124,–
Drum Support FA 60-2, hot-dip galvanized	B	118,–	18,–	136,–
Drum Support FA 60-3, hot-dip galvanized	B	138,–	21,–	159,–
Can Shelf Type GR-A, galvanized	B	138,–	60,–	198,–
Can Shelf Type GR-B, galvanized	B	138,–	60,–	198,–
Can Shelf Type GR-C, galvanized	B	138,–	60,–	198,–

Mobile Sump Trays Type SERIES 2000	Category	Price	Freight charges	Price including freight charges
2004, painted	B	590,–	141,–	731,–
Fixture and Tension Belt for 1 x 200 Litre Drum	B	48,–	9,–	57,–
2004, hot-dip galvanized	B	657,–	141,–	798,–
Fixture and Tension Belt for 1 x 200 Litre Drum	B	48,–	9,–	57,–
2020, painted	B	656,–	141,–	797,–
Fixture and Tension Belt for 2 x 200 Litre Drums	B	48,–	9,–	57,–
2020, hot-dip galvanized	B	717,–	141,–	858,–
Fixture and Tension Belt for 2 x 200 Litre Drums	B	48,–	9,–	57,–
2050 SR, painted	B	709,–	141,–	850,–
Fixture and Tension Belt for 3 x 200 Litre Drums	B	48,–	9,–	57,–
2050 SR, hot-dip galvanized	B	766,–	225,–	991,–
Fixture and Tension Belt for 3 x 200 Litre Drums	B	48,–	9,–	57,–

Prices in EUR, valid EXW DE-46354 Südlohn, DE-38820 Halberstadt, unpacked
Freight charges valid CPT Portugal, islands and oversea territories excluded

BAUER GmbH
Eichendorffstr. 62
46354 Südlohn, Germany

Tel. +49 2862 70 90
info@bauer-suedlohn.com
www.bauer-suedlohn.com

Geschäftsführer
Patrick Bauer, Pascal Bauer
Amtsgericht Coesfeld HRB 5259

TÜVNORD
TÜV NORD CERT GmbH
DIN EN ISO 9001
tuev-nord.de

Price List 0726 en-PT
Environment / Storage

Drum Shelves with Sump Trays Type SERIES 3000	Category	Price	Freight charges	Price including freight charges
3000, hot-dip galvanized	B	1091,–	225,–	1316,–
Retainer Bar	B	48,–	12,–	60,–
Rotating Support RA 200, hot-dip galvanized	B	97,–	10,–	107,–
Can Stand Type GS, hot-dip galvanized	B	65,–	18,–	83,–
Crash Guard	B	75,–	9,–	84,–
3001, hot-dip galvanized	B	919,–	225,–	1144,–
Retainer Bar	B	48,–	12,–	60,–
Rotating Support RA 200, hot-dip galvanized	B	97,–	10,–	107,–
Can Stand Type GS, hot-dip galvanized	B	65,–	18,–	83,–
Crash Guard	B	75,–	9,–	84,–
3002, hot-dip galvanized	B	1299,–	278,–	1577,–
Retainer Bar	B	48,–	12,–	60,–
Rotating Support RA 200, hot-dip galvanized	B	97,–	10,–	107,–
Can Stand Type GS, hot-dip galvanized	B	65,–	18,–	83,–
Crash Guard	B	75,–	9,–	84,–
3003, hot-dip galvanized	B	1101,–	278,–	1379,–
Retainer Bar	B	48,–	12,–	60,–
Rotating Support RA 200, hot-dip galvanized	B	97,–	10,–	107,–
Can Stand Type GS, hot-dip galvanized	B	65,–	18,–	83,–
Crash Guard	B	75,–	9,–	84,–
3004, hot-dip galvanized	B	1344,–	225,–	1569,–
Retainer Bar	B	48,–	12,–	60,–
Rotating Support RA 60, hot-dip galvanized	B	97,–	9,–	106,–
Can Stand Type GS, hot-dip galvanized	B	65,–	18,–	83,–
Crash Guard	B	75,–	9,–	84,–
3005, hot-dip galvanized	B	1216,–	225,–	1441,–
Retainer Bar	B	48,–	12,–	60,–
Rotating Support RA 60, hot-dip galvanized	B	97,–	9,–	106,–
Can Stand Type GS, hot-dip galvanized	B	65,–	18,–	83,–
Crash Guard	B	75,–	9,–	84,–
3006, hot-dip galvanized	B	1697,–	380,–	2077,–
Retainer Bar	B	48,–	12,–	60,–
Rotating Support RA 60, hot-dip galvanized	B	97,–	9,–	106,–
Can Stand Type GS, hot-dip galvanized	B	65,–	18,–	83,–
Crash Guard	B	75,–	9,–	84,–
3007, hot-dip galvanized	B	1449,–	278,–	1727,–
Retainer Bar	B	48,–	12,–	60,–
Rotating Support RA 60, hot-dip galvanized	B	97,–	9,–	106,–
Can Stand Type GS, hot-dip galvanized	B	65,–	18,–	83,–
Crash Guard	B	75,–	9,–	84,–
3010, hot-dip galvanized	B	1288,–	278,–	1566,–
Retainer Bar	B	48,–	12,–	60,–
Rotating Support RA 200, hot-dip galvanized	B	97,–	10,–	107,–
Can Stand Type GS, hot-dip galvanized	B	65,–	18,–	83,–
Crash Guard	B	75,–	9,–	84,–
3011, hot-dip galvanized	B	1071,–	278,–	1349,–

Prices in EUR, valid EXW DE-46354 Südlohn, DE-38820 Halberstadt, unpacked
Freight charges valid CPT Portugal, islands and oversea territories excluded

BAUER GmbH
Eichendorffstr. 62
46354 Südlohn, Germany

Tel. +49 2862 70 90
info@bauer-suedlohn.com
www.bauer-suedlohn.com

Geschäftsführer
Patrick Bauer, Pascal Bauer
Amtsgericht Coesfeld HRB 5259

TÜVNORD
TÜV NORD CERT GmbH
DIN EN ISO 9001
tuev-nord.de

Price List 0726 en-PT
Environment / Storage

Drum Shelves with Sump Trays Type SERIES 3000	Category	Price	Freight charges	Price including freight charges
Retainer Bar	B	48,–	12,–	60,–
Rotating Support RA 200, hot-dip galvanized	B	97,–	10,–	107,–
Can Stand Type GS, hot-dip galvanized	B	65,–	18,–	83,–
Crash Guard	B	75,–	9,–	84,–

Small Can Shelves with Sumps Type SERIES 3000	Category	Price	Freight charges	Price including freight charges
3017-4E, galvanized	B	478,–	141,–	619,–
3018-4E, galvanized	B	397,–	141,–	538,–
3019-4E, galvanized	B	576,–	225,–	801,–
3020-4E, galvanized	B	493,–	225,–	718,–
3021-4E, galvanized	B	719,–	225,–	944,–
3022-4E, galvanized	B	626,–	141,–	767,–
3023-4E, galvanized	B	1162,–	278,–	1440,–
3024-4E, galvanized	B	968,–	278,–	1246,–

Shelves Type AG	Category	Price	Freight charges	Price including freight charges
AG 60-1, hot-dip galvanized	B	112,–	12,–	124,–
AG 60-2, hot-dip galvanized	B	117,–	14,–	131,–
AG 60-3, hot-dip galvanized	B	126,–	15,–	141,–

Sump Tray Type AM	Category	Price	Freight charges	Price including freight charges
AM-1, painted	B	335,–	141,–	476,–
AM-1, hot-dip galvanized	B	379,–	141,–	520,–
AM-2, painted	B	370,–	141,–	511,–
Drum Support FA 60-1, hot-dip galvanized	B	109,–	15,–	124,–
Drum Support FA 60-2, hot-dip galvanized	B	118,–	18,–	136,–
Drum Support FA 60-3, hot-dip galvanized	B	138,–	21,–	159,–
Drum Support FA 200-1, hot-dip galvanized	B	118,–	15,–	133,–
Can Shelf Type GR-A, galvanized	B	138,–	60,–	198,–
Can Shelf Type GR-B, galvanized	B	138,–	60,–	198,–
Can Shelf Type GR-C, galvanized	B	138,–	60,–	198,–
AM-2, hot-dip galvanized	B	427,–	141,–	568,–
Drum Support FA 60-1, hot-dip galvanized	B	109,–	15,–	124,–
Drum Support FA 60-2, hot-dip galvanized	B	118,–	18,–	136,–
Drum Support FA 60-3, hot-dip galvanized	B	138,–	21,–	159,–
Drum Support FA 200-1, hot-dip galvanized	B	118,–	15,–	133,–
Can Shelf Type GR-A, galvanized	B	138,–	60,–	198,–
Can Shelf Type GR-B, galvanized	B	138,–	60,–	198,–
Can Shelf Type GR-C, galvanized	B	138,–	60,–	198,–
AM-4/A, painted	B	443,–	141,–	584,–
Drum Support FA 60-1, hot-dip galvanized	B	109,–	15,–	124,–
Drum Support FA 60-2, hot-dip galvanized	B	118,–	18,–	136,–
Drum Support FA 60-3, hot-dip galvanized	B	138,–	21,–	159,–
Drum Support FA 200-1, hot-dip galvanized	B	118,–	15,–	133,–
Drum Support FA 200-2, hot-dip galvanized	B	138,–	22,–	160,–

Prices in EUR, valid EXW DE-46354 Südlohn, DE-38820 Halberstadt, unpacked
Freight charges valid CPT Portugal, islands and oversea territories excluded

BAUER GmbH
Eichendorffstr. 62
46354 Südlohn, Germany

Tel. +49 2862 70 90
info@bauer-suedlohn.com
www.bauer-suedlohn.com

Geschäftsführer
Patrick Bauer, Pascal Bauer
Amtsgericht Coesfeld HRB 5259

TÜVNORD
TÜV NORD CERT GmbH
DIN EN ISO 9001
tuev-nord.de

Price List 0726 en-PT
Environment / Storage

Sump Tray Type AM	Category	Price	Freight charges	Price including freight charges
Can Shelf Type GR-A, galvanized	B	138,–	60,–	198,–
Can Shelf Type GR-B, galvanized	B	138,–	60,–	198,–
Can Shelf Type GR-C, galvanized	B	138,–	60,–	198,–
AM-4/A, hot-dip galvanized	B	499,–	225,–	724,–
Drum Support FA 60-1, hot-dip galvanized	B	109,–	15,–	124,–
Drum Support FA 60-2, hot-dip galvanized	B	118,–	18,–	136,–
Drum Support FA 60-3, hot-dip galvanized	B	138,–	21,–	159,–
Drum Support FA 200-1, hot-dip galvanized	B	118,–	15,–	133,–
Drum Support FA 200-2, hot-dip galvanized	B	138,–	22,–	160,–
Can Shelf Type GR-A, galvanized	B	138,–	60,–	198,–
Can Shelf Type GR-B, galvanized	B	138,–	60,–	198,–
Can Shelf Type GR-C, galvanized	B	138,–	60,–	198,–
AM-4/B, painted	B	532,–	225,–	757,–
Drum Support FA 60-1, hot-dip galvanized	B	109,–	15,–	124,–
Drum Support FA 60-2, hot-dip galvanized	B	118,–	18,–	136,–
Drum Support FA 60-3, hot-dip galvanized	B	138,–	21,–	159,–
Can Shelf Type GR-A, galvanized	B	138,–	60,–	198,–
Can Shelf Type GR-B, galvanized	B	138,–	60,–	198,–
Can Shelf Type GR-C, galvanized	B	138,–	60,–	198,–
AM-4/B, hot-dip galvanized	B	624,–	225,–	849,–
Drum Support FA 60-1, hot-dip galvanized	B	109,–	15,–	124,–
Drum Support FA 60-2, hot-dip galvanized	B	118,–	18,–	136,–
Drum Support FA 60-3, hot-dip galvanized	B	138,–	21,–	159,–
Can Shelf Type GR-A, galvanized	B	138,–	60,–	198,–
Can Shelf Type GR-B, galvanized	B	138,–	60,–	198,–
Can Shelf Type GR-C, galvanized	B	138,–	60,–	198,–

Sump Tray Type AO	Category	Price	Freight charges	Price including freight charges
AO-1, painted	B	292,–	141,–	433,–
AO-1, hot-dip galvanized	B	337,–	141,–	478,–
AO-2, painted	B	310,–	141,–	451,–
AO-2, hot-dip galvanized	B	367,–	141,–	508,–
AO-4/A, painted	B	322,–	141,–	463,–
AO-4/A, hot-dip galvanized	B	378,–	141,–	519,–
AO-4/B, painted	B	412,–	141,–	553,–
AO-4/B, hot-dip galvanized	B	500,–	141,–	641,–

Sump Tray Type AW	Category	Price	Freight charges	Price including freight charges
AW 450, painted	B	641,–	225,–	866,–
AW 450, hot-dip galvanized	B	795,–	225,–	1020,–
AW 800, painted	B	667,–	225,–	892,–
AW 800, hot-dip galvanized	B	831,–	225,–	1056,–
AW 1000, painted	B	672,–	225,–	897,–
AW 1000, hot-dip galvanized	B	838,–	225,–	1063,–
AW 1000-2, painted	B	861,–	380,–	1241,–

Prices in EUR, valid EXW DE-46354 Südlohn, DE-38820 Halberstadt, unpacked
Freight charges valid CPT Portugal, islands and oversea territories excluded

BAUER GmbH
Eichendorffstr. 62
46354 Südlohn, Germany

Tel. +49 2862 70 90
info@bauer-suedlohn.com
www.bauer-suedlohn.com

Geschäftsführer
Patrick Bauer, Pascal Bauer
Amtsgericht Coesfeld HRB 5259

TÜVNORD
TÜV NORD CERT GmbH
DIN EN ISO 9001
tuev-nord.de

Price List 0726 en-PT
Environment / Storage

Sump Tray Type AW	Category	Price	Freight charges	Price including freight charges
AW 1000-2, hot-dip galvanized	B	966,–	380,–	1346,–
AW 1000-3, painted	B	1524,–	380,–	1904,–
AW 1000-3, hot-dip galvanized	B	1641,–	451,–	2092,–
AW 1000-10F, painted	B	1032,–	380,–	1412,–
AW 1000-10F, hot-dip galvanized	B	1195,–	380,–	1575,–

Sump Tray Type AW/SW	Category	Price	Freight charges	Price including freight charges
AW 450/SW, painted	B	844,–	225,–	1069,–
AW 450/SW, hot-dip galvanized	B	998,–	327,–	1325,–
AW 800/SW, painted	B	869,–	327,–	1196,–
AW 800/SW, hot-dip galvanized	B	1032,–	327,–	1359,–
AW 1000/SW, painted	B	874,–	327,–	1201,–
AW 1000/SW, hot-dip galvanized	B	1042,–	327,–	1369,–
AW 1000-2/SW, painted	B	1091,–	380,–	1471,–
AW 1000-2/SW, hot-dip galvanized	B	1196,–	451,–	1647,–
AW 1000-3/SW, painted	B	1787,–	on request	on request
AW 1000-3/SW, hot-dip galvanized	B	2121,–	on request	on request
AW 1000-10F/SW, painted	B	1387,–	451,–	1838,–
AW 1000-10F/SW, hot-dip galvanized	B	1548,–	451,–	1999,–

Mobile Sump Tray AW 60-1 SR	Category	Price	Freight charges	Price including freight charges
AW 60-1 SR, painted	B	325,–	141,–	466,–
Fixture and Tension belt for 2 x 60 Litre Drums	B	45,–	8,–	53,–
AW 60-1 SR, hot-dip galvanized	B	345,–	141,–	486,–
Fixture and Tension belt for 2 x 60 Litre Drums	B	45,–	8,–	53,–

Mobile Sump Tray AW 60-1 SRF	Category	Price	Freight charges	Price including freight charges
AW 60-1 SRF, painted	B	429,–	141,–	570,–
AW 60-1 SRF, hot-dip galvanized	B	451,–	141,–	592,–

Sump Tray Type AW 60	Category	Price	Freight charges	Price including freight charges
AW 60-1, painted	B	176,–	60,–	236,–
Grid GR 60-1, hot-dip galvanized	B	23,–	8,–	31,–
Drum Suppport FA 60-A, galvanized	B	25,–	8,–	33,–
Rotating Support RA 60-A, hot-dip galvanized	B	97,–	9,–	106,–
AG 60-1, hot-dip galvanized	B	112,–	12,–	124,–
Canister Stand AB, galvanized	B	19,–	8,–	27,–
Castor Set, polyamide, Load capacity 375 kg / castor set	B	86,–	15,–	101,–
AW 60-1, hot-dip galvanized	B	189,–	60,–	249,–
Grid GR 60-1, hot-dip galvanized	B	23,–	8,–	31,–
Drum Suppport FA 60-A, galvanized	B	25,–	8,–	33,–
Rotating Support RA 60-A, hot-dip galvanized	B	97,–	9,–	106,–
AG 60-1, hot-dip galvanized	B	112,–	12,–	124,–
Canister Stand AB, galvanized	B	19,–	8,–	27,–
Castor Set, polyamide, Load capacity 375 kg / castor set	B	86,–	15,–	101,–

Prices in EUR, valid EXW DE-46354 Südlohn, DE-38820 Halberstadt, unpacked
Freight charges valid CPT Portugal, islands and oversea territories excluded

BAUER GmbH
Eichendorffstr. 62
46354 Südlohn, Germany

Tel. +49 2862 70 90
info@bauer-suedlohn.com
www.bauer-suedlohn.com

Geschäftsführer
Patrick Bauer, Pascal Bauer
Amtsgericht Coesfeld HRB 5259

TÜVNORD
TÜV NORD CERT GmbH
DIN EN ISO 9001
tuev-nord.de

Price List 0726 en-PT
Environment / Storage

Sump Tray Type AW 60	Category	Price	Freight charges	Price including freight charges
AW 60-2, painted	B	177,–	141,–	318,–
Grid GR 60-2, hot-dip galvanized	B	27,–	12,–	39,–
Drum Suppport FA 60-A, galvanized	B	25,–	8,–	33,–
Rotating Support RA 60-A, hot-dip galvanized	B	97,–	9,–	106,–
AG 60-2, hot-dip galvanized	B	117,–	14,–	131,–
Canister Stand AB, galvanized	B	19,–	8,–	27,–
Castor Set, polyamide, Load capacity 375 kg / castor set	B	86,–	15,–	101,–
AW 60-2, hot-dip galvanized	B	195,–	141,–	336,–
Grid GR 60-2, hot-dip galvanized	B	27,–	12,–	39,–
Drum Suppport FA 60-A, galvanized	B	25,–	8,–	33,–
Rotating Support RA 60-A, hot-dip galvanized	B	97,–	9,–	106,–
AG 60-2, hot-dip galvanized	B	117,–	14,–	131,–
Canister Stand AB, galvanized	B	19,–	8,–	27,–
Castor Set, polyamide, Load capacity 375 kg / castor set	B	86,–	15,–	101,–
AW 60-3, painted	B	193,–	141,–	334,–
Grid GR 60-3, hot-dip galvanized	B	40,–	14,–	54,–
Drum Suppport FA 60-A, galvanized	B	25,–	8,–	33,–
Rotating Support RA 60-A, hot-dip galvanized	B	97,–	9,–	106,–
AG 60-3, hot-dip galvanized	B	126,–	15,–	141,–
Canister Stand AB, galvanized	B	19,–	8,–	27,–
Castor Set, polyamide, Load capacity 375 kg / castor set	B	86,–	15,–	101,–
AW 60-3, hot-dip galvanized	B	217,–	141,–	358,–
Grid GR 60-3, hot-dip galvanized	B	40,–	14,–	54,–
Drum Suppport FA 60-A, galvanized	B	25,–	8,–	33,–
Rotating Support RA 60-A, hot-dip galvanized	B	97,–	9,–	106,–
AG 60-3, hot-dip galvanized	B	126,–	15,–	141,–
Canister Stand AB, galvanized	B	19,–	8,–	27,–
Castor Set, polyamide, Load capacity 375 kg / castor set	B	86,–	15,–	101,–

Sump Tray Type AW 60/M	Category	Price	Freight charges	Price including freight charges
AW 60-1/M, painted	B	196,–	141,–	337,–
Drum Suppport FA 60-A, galvanized	B	25,–	8,–	33,–
Rotating Support RA 60-A, hot-dip galvanized	B	97,–	9,–	106,–
AG 60-1, hot-dip galvanized	B	112,–	12,–	124,–
Canister Stand AB, galvanized	B	19,–	8,–	27,–
Castor Set, polyamide, Load capacity 375 kg / castor set	B	86,–	15,–	101,–
AW 60-1/M, hot-dip galvanized	B	211,–	141,–	352,–
Drum Suppport FA 60-A, galvanized	B	25,–	8,–	33,–
Rotating Support RA 60-A, hot-dip galvanized	B	97,–	9,–	106,–
AG 60-1, hot-dip galvanized	B	112,–	12,–	124,–
Canister Stand AB, galvanized	B	19,–	8,–	27,–
Castor Set, polyamide, Load capacity 375 kg / castor set	B	86,–	15,–	101,–
AW 60-2/M, painted	B	203,–	141,–	344,–
Drum Suppport FA 60-A, galvanized	B	25,–	8,–	33,–
Drum Support FA 60-2, hot-dip galvanized	B	118,–	18,–	136,–
Rotating Support RA 60-A, hot-dip galvanized	B	97,–	9,–	106,–

Prices in EUR, valid EXW DE-46354 Südlohn, DE-38820 Halberstadt, unpacked
Freight charges valid CPT Portugal, islands and oversea territories excluded

BAUER GmbH
Eichendorffstr. 62
46354 Südlohn, Germany

Tel. +49 2862 70 90
info@bauer-suedlohn.com
www.bauer-suedlohn.com

Geschäftsführer
Patrick Bauer, Pascal Bauer
Amtsgericht Coesfeld HRB 5259

TÜVNORD
TÜV NORD CERT GmbH
DIN EN ISO 9001
tuev-nord.de

Price List 0726 en-PT
Environment / Storage

Sump Tray Type AW 60/M	Category	Price	Freight charges	Price including freight charges
AG 60-2, hot-dip galvanized	B	117,–	14,–	131,–
Canister Stand AB, galvanized	B	19,–	8,–	27,–
Castor Set, polyamide, Load capacity 375 kg / castor set	B	86,–	15,–	101,–
AW 60-2/M, hot-dip galvanized	B	221,–	141,–	362,–
Drum Suppport FA 60-A, galvanized	B	25,–	8,–	33,–
Drum Support FA 60-2, hot-dip galvanized	B	118,–	18,–	136,–
Rotating Support RA 60-A, hot-dip galvanized	B	97,–	9,–	106,–
AG 60-2, hot-dip galvanized	B	117,–	14,–	131,–
Canister Stand AB, galvanized	B	19,–	8,–	27,–
Castor Set, polyamide, Load capacity 375 kg / castor set	B	86,–	15,–	101,–
AW 60-3/M, painted	B	232,–	141,–	373,–
Drum Suppport FA 60-A, galvanized	B	25,–	8,–	33,–
Drum Support FA 60-2, hot-dip galvanized	B	118,–	18,–	136,–
Drum Support FA 60-3, hot-dip galvanized	B	138,–	21,–	159,–
Rotating Support RA 60-A, hot-dip galvanized	B	97,–	9,–	106,–
AG 60-3, hot-dip galvanized	B	126,–	15,–	141,–
Canister Stand AB, galvanized	B	19,–	8,–	27,–
Castor Set, polyamide, Load capacity 375 kg / castor set	B	86,–	15,–	101,–
AW 60-3/M, hot-dip galvanized	B	254,–	141,–	395,–
Drum Suppport FA 60-A, galvanized	B	25,–	8,–	33,–
Drum Support FA 60-2, hot-dip galvanized	B	118,–	18,–	136,–
Drum Support FA 60-3, hot-dip galvanized	B	138,–	21,–	159,–
Rotating Support RA 60-A, hot-dip galvanized	B	97,–	9,–	106,–
AG 60-3, hot-dip galvanized	B	126,–	15,–	141,–
Canister Stand AB, galvanized	B	19,–	8,–	27,–
Castor Set, polyamide, Load capacity 375 kg / castor set	B	86,–	15,–	101,–

Sump Tray Type AW/PE	Category	Price	Freight charges	Price including freight charges
AW-1/PE, painted	B	658,–	141,–	799,–
AW-1/PE, hot-dip galvanized	B	688,–	141,–	829,–
AW-2/PE, painted	B	721,–	141,–	862,–
Drum Support FA 60-1, hot-dip galvanized	B	109,–	15,–	124,–
Drum Support FA 60-2, hot-dip galvanized	B	118,–	18,–	136,–
Drum Support FA 60-3, hot-dip galvanized	B	138,–	21,–	159,–
Drum Support FA 200-1, hot-dip galvanized	B	118,–	15,–	133,–
Can Shelf Type GR-A, galvanized	B	138,–	60,–	198,–
Can Shelf Type GR-B, galvanized	B	138,–	60,–	198,–
Can Shelf Type GR-C, galvanized	B	138,–	60,–	198,–
AW-2/PE, hot-dip galvanized	B	757,–	141,–	898,–
Drum Support FA 60-1, hot-dip galvanized	B	109,–	15,–	124,–
Drum Support FA 60-2, hot-dip galvanized	B	118,–	18,–	136,–
Drum Support FA 60-3, hot-dip galvanized	B	138,–	21,–	159,–
Drum Support FA 200-1, hot-dip galvanized	B	118,–	15,–	133,–
Can Shelf Type GR-A, galvanized	B	138,–	60,–	198,–
Can Shelf Type GR-B, galvanized	B	138,–	60,–	198,–
Can Shelf Type GR-C, galvanized	B	138,–	60,–	198,–

Prices in EUR, valid EXW DE-46354 Südlohn, DE-38820 Halberstadt, unpacked
Freight charges valid CPT Portugal, islands and oversea territories excluded

BAUER GmbH
Eichendorffstr. 62
46354 Südlohn, Germany

Tel. +49 2862 70 90
info@bauer-suedlohn.com
www.bauer-suedlohn.com

Geschäftsführer
Patrick Bauer, Pascal Bauer
Amtsgericht Coesfeld HRB 5259

TÜVNORD
TÜV NORD CERT GmbH
DIN EN ISO 9001
tuev-nord.de

Price List 0726 en-PT
Environment / Storage

Sump Tray Type AW/PE	Category	Price	Freight charges	Price including freight charges
AW-4/A/PE, painted	B	818,–	225,–	1043,–
Drum Support FA 60-1, hot-dip galvanized	B	109,–	15,–	124,–
Drum Support FA 60-2, hot-dip galvanized	B	118,–	18,–	136,–
Drum Support FA 60-3, hot-dip galvanized	B	138,–	21,–	159,–
Drum Support FA 200-1, hot-dip galvanized	B	118,–	15,–	133,–
Drum Support FA 200-2, hot-dip galvanized	B	138,–	22,–	160,–
Can Shelf Type GR-A, galvanized	B	138,–	60,–	198,–
Can Shelf Type GR-B, galvanized	B	138,–	60,–	198,–
Can Shelf Type GR-C, galvanized	B	138,–	60,–	198,–
AW-4/A/PE, hot-dip galvanized	B	859,–	225,–	1084,–
Drum Support FA 60-1, hot-dip galvanized	B	109,–	15,–	124,–
Drum Support FA 60-2, hot-dip galvanized	B	118,–	18,–	136,–
Drum Support FA 60-3, hot-dip galvanized	B	138,–	21,–	159,–
Drum Support FA 200-1, hot-dip galvanized	B	118,–	15,–	133,–
Drum Support FA 200-2, hot-dip galvanized	B	138,–	22,–	160,–
Can Shelf Type GR-A, galvanized	B	138,–	60,–	198,–
Can Shelf Type GR-B, galvanized	B	138,–	60,–	198,–
Can Shelf Type GR-C, galvanized	B	138,–	60,–	198,–
AW-4/B/PE, painted	B	1021,–	278,–	1299,–
Drum Support FA 60-1, hot-dip galvanized	B	109,–	15,–	124,–
Drum Support FA 60-2, hot-dip galvanized	B	118,–	18,–	136,–
Drum Support FA 60-3, hot-dip galvanized	B	138,–	21,–	159,–
Can Shelf Type GR-A, galvanized	B	138,–	60,–	198,–
Can Shelf Type GR-B, galvanized	B	138,–	60,–	198,–
Can Shelf Type GR-C, galvanized	B	138,–	60,–	198,–
AW-4/B/PE, hot-dip galvanized	B	1096,–	278,–	1374,–
Drum Support FA 60-1, hot-dip galvanized	B	109,–	15,–	124,–
Drum Support FA 60-2, hot-dip galvanized	B	118,–	18,–	136,–
Drum Support FA 60-3, hot-dip galvanized	B	138,–	21,–	159,–
Can Shelf Type GR-A, galvanized	B	138,–	60,–	198,–
Can Shelf Type GR-B, galvanized	B	138,–	60,–	198,–
Can Shelf Type GR-C, galvanized	B	138,–	60,–	198,–
AW 1000/PE, painted	B	1386,–	327,–	1713,–
AW 1000/PE, hot-dip galvanized	B	1575,–	327,–	1902,–
AW 1000-2/PE, painted	B	1700,–	380,–	2080,–
AW 1000-2/PE, hot-dip galvanized	B	1818,–	380,–	2198,–

Sump Trays AW 8-12	Category	Price	Freight charges	Price including freight charges
AW-8, painted	B	732,–	278,–	1010,–
AW-8, hot-dip galvanized	B	815,–	380,–	1195,–
AW-10, painted	B	904,–	380,–	1284,–
AW-10, hot-dip galvanized	B	1239,–	380,–	1619,–
AW-12, painted	B	1035,–	380,–	1415,–
AW-12, hot-dip galvanized	B	1431,–	380,–	1811,–

Prices in EUR, valid EXW DE-46354 Südlohn, DE-38820 Halberstadt, unpacked
Freight charges valid CPT Portugal, islands and oversea territories excluded

BAUER GmbH
Eichendorffstr. 62
46354 Südlohn, Germany

Tel. +49 2862 70 90
info@bauer-suedlohn.com
www.bauer-suedlohn.com

Geschäftsführer
Patrick Bauer, Pascal Bauer
Amtsgericht Coesfeld HRB 5259

TÜVNORD
TÜV NORD CERT GmbH
DIN EN ISO 9001
tuev-nord.de

Price List 0726 en-PT
Environment / Storage

Sump Tray Type AWA	Category	Price	Freight charges	Price including freight charges
AWA 1000, painted	B	864,–	225,–	1089,–
AWA 1000, hot-dip galvanized	B	1045,–	327,–	1372,–
AWA 1000-2, painted	B	1239,–	380,–	1619,–
AWA 1000-2, hot-dip galvanized	B	1374,–	380,–	1754,–
AWA 1000-3, painted	B	2254,–	451,–	2705,–
AWA 1000-3, hot-dip galvanized	B	2385,–	620,–	3005,–
AWA 21, painted	B	1048,–	380,–	1428,–
AWA 21, hot-dip galvanized	B	1182,–	380,–	1562,–
AWA 31, painted	B	1956,–	451,–	2407,–
AWA 31, hot-dip galvanized	B	2077,–	451,–	2528,–
AWA 32, painted	B	2127,–	451,–	2578,–
AWA 32, hot-dip galvanized	B	2250,–	451,–	2701,–

Sump Tray Type AWA/SW	Category	Price	Freight charges	Price including freight charges
AWA 1000/SW, painted	B	1064,–	327,–	1391,–
AWA 1000/SW, hot-dip galvanized	B	1246,–	327,–	1573,–
AWA 1000-2/SW, painted	B	1472,–	451,–	1923,–
AWA 1000-2/SW, hot-dip galvanized	B	1605,–	451,–	2056,–
AWA 1000-3/SW, painted	B	2518,–	on request	on request
AWA 1000-3/SW, hot-dip galvanized	B	2648,–	on request	on request
AWA 21/SW, painted	B	1278,–	451,–	1729,–
AWA 21/SW, hot-dip galvanized	B	1413,–	451,–	1864,–
AWA 31/SW, painted	B	2217,–	on request	on request
AWA 31/SW, hot-dip galvanized	B	2339,–	on request	on request
AWA 32/SW, painted	B	2388,–	on request	on request
AWA 32/SW, hot-dip galvanized	B	2512,–	on request	on request

Sump Tray Type AW-F	Category	Price	Freight charges	Price including freight charges
AW-F 1, painted	B	657,–	141,–	798,–
Fixture and Tension Belt for 1 x 200 Litre Drum	B	48,–	9,–	57,–
AW-F 1, hot-dip galvanized	B	780,–	141,–	921,–
Fixture and Tension Belt for 1 x 200 Litre Drum	B	48,–	9,–	57,–
AW-F 2, painted	B	688,–	141,–	829,–
Fixture and Tension Belt for 2 x 200 Litre Drums	B	48,–	9,–	57,–
AW-F 2, hot-dip galvanized	B	842,–	141,–	983,–
Fixture and Tension Belt for 2 x 200 Litre Drums	B	48,–	9,–	57,–

Ground Protection Spill Tray Type BSW	Category	Price	Freight charges	Price including freight charges
BSW 21, galvanized	B	449,–	225,–	674,–
Access Ramp AR 21, galvanized	B	166,–	22,–	188,–
Access Corner Piece AE 24, galvanized	B	130,–	10,–	140,–
Cross-Shaped Connector KV 24, galvanized	B	20,–	8,–	28,–
Tray Connecting Strip WV 21, galvanized	B	22,–	8,–	30,–
BSW 22, galvanized	B	590,–	225,–	815,–
Access Ramp AR 21, galvanized	B	166,–	22,–	188,–

Prices in EUR, valid EXW DE-46354 Südlohn, DE-38820 Halberstadt, unpacked
Freight charges valid CPT Portugal, islands and oversea territories excluded

BAUER GmbH
Eichendorffstr. 62
46354 Südlohn, Germany

Tel. +49 2862 70 90
info@bauer-suedlohn.com
www.bauer-suedlohn.com

Geschäftsführer
Patrick Bauer, Pascal Bauer
Amtsgericht Coesfeld HRB 5259

TÜVNORD
TÜV NORD CERT GmbH
DIN EN ISO 9001
tuev-nord.de

Ground Protection Spill Tray Type BSW	Category	Price	Freight charges	Price including freight charges
Access Ramp AR 22, galvanized	B	211,–	32,–	243,–
Access Corner Piece AE 24, galvanized	B	130,–	10,–	140,–
Cross-Shaped Connector KV 24, galvanized	B	20,–	8,–	28,–
Tray Connecting Strip WV 21, galvanized	B	22,–	8,–	30,–
Tray Connecting Strip WV 22, galvanized	B	24,–	8,–	32,–
BSW 23, galvanized	B	764,–	346,–	1110,–
Access Ramp AR 23, galvanized	B	300,–	194,–	494,–
Access Ramp AR 21, galvanized	B	166,–	22,–	188,–
Access Corner Piece AE 24, galvanized	B	130,–	10,–	140,–
Cross-Shaped Connector KV 24, galvanized	B	20,–	8,–	28,–
Tray Connecting Strip WV 21, galvanized	B	22,–	8,–	30,–
Tray Connecting Strip WV 23, galvanized	B	37,–	9,–	46,–
BSW 24, galvanized	B	1341,–	437,–	1778,–
Access Ramp AR 23, galvanized	B	300,–	194,–	494,–
Access Ramp AR 22, galvanized	B	211,–	32,–	243,–
Access Corner Piece AE 24, galvanized	B	130,–	10,–	140,–
Cross-Shaped Connector KV 24, galvanized	B	20,–	8,–	28,–
Tray Connecting Strip WV 22, galvanized	B	24,–	8,–	32,–
Tray Connecting Strip WV 23, galvanized	B	37,–	9,–	46,–
BSW 121, galvanized	B	199,–	60,–	259,–
Access Ramp AR 121, galvanized	B	163,–	22,–	185,–
Cross-Shaped Connector KV 24, galvanized	B	20,–	8,–	28,–
Tray Connecting Strip WV 121, galvanized	B	21,–	9,–	30,–
BSW 122, galvanized	B	243,–	141,–	384,–
Access Ramp AR 121, galvanized	B	163,–	22,–	185,–
Access Ramp AR 122, galvanized	B	275,–	36,–	311,–
Access Corner Piece AE 124, galvanized	B	261,–	21,–	282,–
Cross-Shaped Connector KV 24, galvanized	B	20,–	8,–	28,–
Tray Connecting Strip WV 121, galvanized	B	21,–	9,–	30,–
Tray Connecting Strip WV 122, galvanized	B	26,–	9,–	35,–
BSW 123, galvanized	B	339,–	141,–	480,–
Access Ramp AR 122, galvanized	B	275,–	36,–	311,–
Access Corner Piece AE 124, galvanized	B	261,–	21,–	282,–
Cross-Shaped Connector KV 24, galvanized	B	20,–	8,–	28,–
Tray Connecting Strip WV 122, galvanized	B	26,–	9,–	35,–
BSW 124, galvanized	B	553,–	225,–	778,–
Access Ramp AR 122, galvanized	B	275,–	36,–	311,–
Access Ramp AR 123, galvanized	B	338,–	225,–	563,–
Access Corner Piece AE 124, galvanized	B	261,–	21,–	282,–
Cross-Shaped Connector KV 24, galvanized	B	20,–	8,–	28,–
Tray Connecting Strip WV 122, galvanized	B	26,–	9,–	35,–
Tray Connecting Strip WV 123, galvanized	B	36,–	9,–	45,–
BSW 125, galvanized	B	426,–	278,–	704,–
Access Ramp AR 121, galvanized	B	163,–	22,–	185,–
Access Ramp AR 124, galvanized	B	392,–	278,–	670,–
Access Corner Piece AE 124, galvanized	B	261,–	21,–	282,–

Prices in EUR, valid EXW DE-46354 Südlohn, DE-38820 Halberstadt, unpacked
Freight charges valid CPT Portugal, islands and oversea territories excluded

BAUER GmbH
Eichendorffstr. 62
46354 Südlohn, Germany

Tel. +49 2862 70 90
info@bauer-suedlohn.com
www.bauer-suedlohn.com

Geschäftsführer
Patrick Bauer, Pascal Bauer
Amtsgericht Coesfeld HRB 5259

TÜVNORD
TÜV NORD CERT GmbH
DIN EN ISO 9001
tuev-nord.de

Price List 0726 en-PT
Environment / Storage

Ground Protection Spill Tray Type BSW	Category	Price	Freight charges	Price including freight charges
Cross-Shaped Connector KV 24, galvanized	B	20,–	8,–	28,–
Tray Connecting Strip WV 121, galvanized	B	21,–	9,–	30,–
Tray Connecting Strip WV 124, galvanized	B	49,–	9,–	58,–
BSW 126, galvanized	B	668,–	380,–	1048,–
Access Ramp AR 122, galvanized	B	275,–	36,–	311,–
Access Ramp AR 124, galvanized	B	392,–	278,–	670,–
Access Corner Piece AE 124, galvanized	B	261,–	21,–	282,–
Cross-Shaped Connector KV 24, galvanized	B	20,–	8,–	28,–
Tray Connecting Strip WV 122, galvanized	B	26,–	9,–	35,–
Tray Connecting Strip WV 124, galvanized	B	49,–	9,–	58,–

Polyethylene Bunded Spill Flooring Type BWP-PE	Category	Price	Freight charges	Price including freight charges
BWP-PE 150, made of robust polyethylene	B	316,–	141,–	457,–
Ramp Type BWR, robust polyethylene, black	B	222,–	12,–	234,–
Joining Element BWV 2, stainless steel 1.4301	B	29,–	9,–	38,–
BWP-PE 300, made of robust polyethylene	B	641,–	141,–	782,–
Ramp Type BWR, robust polyethylene, black	B	222,–	12,–	234,–
Joining Element BWV 4, stainless steel 1.4301	B	38,–	10,–	48,–

Polyethylene Bunded Spill Flooring Type BWPS-PE	Category	Price	Freight charges	Price including freight charges
BWPS-PE 300, made of robust polyethylene	B	786,–	194,–	980,–
Ramp Type BWR, robust polyethylene, black	B	222,–	12,–	234,–
Joining Element BWV 2, stainless steel 1.4301	B	29,–	9,–	38,–

Shelf Container Type CEH	Category	Price	Freight charges	Price including freight charges
CEH 29-2, painted	C	9142,–	on request	on request
CEH 29-2 IBC, painted	C	10076,–	on request	on request
CEH 36-2 IBC, painted	C	11727,–	on request	on request
CEH 38-2, painted	C	11719,–	on request	on request
CEH 59-2, painted	C	17352,–	on request	on request
CEH 59-2 IBC, painted	C	18629,–	on request	on request
CEH 75-2 IBC, painted	C	22081,–	on request	on request
CEH 81-2, painted	C	22524,–	on request	on request

Shelf Container Type CEN	Category	Price	Freight charges	Price including freight charges
CEN 29-2, painted	C	7714,–	on request	on request
Potential equalisation	C	184,–	0,–	184,–
CEN 29-2 IBC, painted	C	8421,–	on request	on request
Potential equalisation	C	184,–	0,–	184,–
CEN 29-2b, painted	C	13445,–	on request	on request
Potential equalisation	C	366,–	0,–	366,–
CEN 29-2b IBC, painted	C	14379,–	on request	on request
Potential equalisation	C	366,–	0,–	366,–
CEN 29-3, painted	C	12140,–	on request	on request
Potential equalisation	C	274,–	0,–	274,–

Prices in EUR, valid EXW DE-46354 Südlohn, DE-38820 Halberstadt, unpacked
Freight charges valid CPT Portugal, islands and oversea territories excluded

BAUER GmbH
Eichendorffstr. 62
46354 Südlohn, Germany

Tel. +49 2862 70 90
info@bauer-suedlohn.com
www.bauer-suedlohn.com

Geschäftsführer
Patrick Bauer, Pascal Bauer
Amtsgericht Coesfeld HRB 5259

TÜVNORD
TÜV NORD CERT GmbH
DIN EN ISO 9001
tuev-nord.de

Price List 0726 en-PT
Environment / Storage

Shelf Container Type CEN	Category	Price	Freight charges	Price including freight charges
CEN 29-3 IBC, painted	C	12917,–	on request	on request
Potential equalisation	C	274,–	0,–	274,–
CEN 29-3b, painted	C	19757,–	on request	on request
Potential equalisation	C	546,–	0,–	546,–
CEN 29-3b IBC, painted	C	20862,–	on request	on request
Potential equalisation	C	546,–	0,–	546,–
CEN 33-2 IBC, painted	C	9393,–	on request	on request
Potential equalisation	C	184,–	0,–	184,–
CEN 33-2b IBC, painted	C	15740,–	on request	on request
Potential equalisation	C	366,–	0,–	366,–
CEN 33-3 IBC, painted	C	13849,–	on request	on request
Potential equalisation	C	274,–	0,–	274,–
CEN 33-3b IBC, painted	C	22018,–	on request	on request
Potential equalisation	C	546,–	0,–	546,–
CEN 36-2, painted	C	9470,–	on request	on request
Potential equalisation	C	184,–	0,–	184,–
CEN 36-2b, painted	C	16110,–	on request	on request
Potential equalisation	C	366,–	0,–	366,–
CEN 36-3, painted	C	14046,–	on request	on request
Potential equalisation	C	274,–	0,–	274,–
CEN 36-3b, painted	C	22693,–	on request	on request
Potential equalisation	C	546,–	0,–	546,–
CEN 59-2, painted	C	12772,–	on request	on request
Potential equalisation	C	365,–	0,–	365,–
CEN 59-2 IBC, painted	C	13917,–	on request	on request
Potential equalisation	C	365,–	0,–	365,–
CEN 59-2b, painted	C	21982,–	on request	on request
Potential equalisation	C	729,–	0,–	729,–
CEN 59-2b IBC, painted	C	22754,–	on request	on request
Potential equalisation	C	729,–	0,–	729,–
CEN 59-3, painted	C	19663,–	on request	on request
Potential equalisation	C	545,–	0,–	545,–
CEN 59-3 IBC, painted	C	20812,–	on request	on request
Potential equalisation	C	545,–	0,–	545,–
CEN 59-3b, painted	C	31741,–	on request	on request
Potential equalisation	C	1089,–	0,–	1089,–
CEN 59-3b IBC, painted	C	33404,–	on request	on request
Potential equalisation	C	1089,–	0,–	1089,–
CEN 65-2 IBC, painted	C	15002,–	on request	on request
Potential equalisation	C	365,–	0,–	365,–
CEN 65-2b IBC, painted	C	25299,–	on request	on request
Potential equalisation	C	729,–	0,–	729,–
CEN 65-3 IBC, painted	C	21999,–	on request	on request
Potential equalisation	C	545,–	0,–	545,–
CEN 65-3b IBC, painted	C	35919,–	on request	on request
Potential equalisation	C	1089,–	0,–	1089,–

Prices in EUR, valid EXW DE-46354 Südlohn, DE-38820 Halberstadt, unpacked
Freight charges valid CPT Portugal, islands and oversea territories excluded

BAUER GmbH
Eichendorffstr. 62
46354 Südlohn, Germany

Tel. +49 2862 70 90
info@bauer-suedlohn.com
www.bauer-suedlohn.com

Geschäftsführer
Patrick Bauer, Pascal Bauer
Amtsgericht Coesfeld HRB 5259

TÜVNORD
TÜV NORD CERT GmbH
DIN EN ISO 9001
tuev-nord.de

Price List 0726 en-PT
Environment / Storage

Shelf Container Type CEN	Category	Price	Freight charges	Price including freight charges
CEN 75-2, painted	C	16004,–	on request	on request
Potential equalisation	C	365,–	0,–	365,–
CEN 75-2b, painted	C	26485,–	on request	on request
Potential equalisation	C	729,–	0,–	729,–
CEN 75-3, painted	C	23086,–	on request	on request
Potential equalisation	C	545,–	0,–	545,–
CEN 75-3b, painted	C	37480,–	on request	on request
Potential equalisation	C	1089,–	0,–	1089,–
CEN 81-2, painted	C	16788,–	on request	on request
Potential equalisation	C	365,–	0,–	365,–
CEN 81-2b, painted	C	27692,–	on request	on request
Potential equalisation	C	729,–	0,–	729,–
CEN 81-3, painted	C	24174,–	on request	on request
Potential equalisation	C	545,–	0,–	545,–
CEN 81-3b, painted	C	39119,–	on request	on request
Potential equalisation	C	1089,–	0,–	1089,–

Sump Tray for Skips Type CW	Category	Price	Freight charges	Price including freight charges
CW 1, painted	B	2952,–	on request	on request
CW 2, painted	B	3226,–	on request	on request
CW 3, painted	B	3722,–	on request	on request

Sump Tray Type ECO	Category	Price	Freight charges	Price including freight charges
ECO 1/200, painted	B	246,–	141,–	387,–
ECO 1/200, hot-dip galvanized	B	256,–	141,–	397,–
ECO 2/200, painted	B	261,–	141,–	402,–
ECO 2/200, hot-dip galvanized	B	270,–	141,–	411,–
ECO 4/200, painted	B	285,–	141,–	426,–
ECO 4/200, hot-dip galvanized	B	297,–	141,–	438,–
ECO 4/400, painted	B	354,–	141,–	495,–
ECO 4/400, hot-dip galvanized	B	370,–	141,–	511,–
ECO 1/1000, painted	B	632,–	225,–	857,–
ECO 1/1000, hot-dip galvanized	B	759,–	225,–	984,–
ECO 2/1000, painted	B	826,–	278,–	1104,–
ECO 2/1000, hot-dip galvanized	B	915,–	278,–	1193,–

Sump Tray Type ECO-A	Category	Price	Freight charges	Price including freight charges
ECO-A 1/1000, painted	B	831,–	225,–	1056,–
ECO-A 1/1000, hot-dip galvanized	B	971,–	225,–	1196,–
ECO-A 2/1000, painted	B	1221,–	380,–	1601,–
ECO-A 2/1000, hot-dip galvanized	B	1341,–	380,–	1721,–

Sump Tray Type ECO-S	Category	Price	Freight charges	Price including freight charges
ECO-S 2/200, hot-dip galvanized	B	3447,–	570,–	4017,–
ECO-S 4/200, hot-dip galvanized	B	4053,–	885,–	4938,–

Prices in EUR, valid EXW DE-46354 Südlohn, DE-38820 Halberstadt, unpacked
Freight charges valid CPT Portugal, islands and oversea territories excluded

BAUER GmbH
Eichendorffstr. 62
46354 Südlohn, Germany

Tel. +49 2862 70 90
info@bauer-suedlohn.com
www.bauer-suedlohn.com

Geschäftsführer
Patrick Bauer, Pascal Bauer
Amtsgericht Coesfeld HRB 5259

TÜVNORD
TÜV NORD CERT GmbH
DIN EN ISO 9001
tuev-nord.de

Price List 0726 en-PT
Environment / Storage

Sump Tray Type ECO-S	Category	Price	Freight charges	Price including freight charges
ECO-S 4/400, hot-dip galvanized	B	5000,–	885,–	5885,–

Suspended Sump with Polyethylene Inlay Type EHW PE	Category	Price	Freight charges	Price including freight charges
EHW 1800 PE, painted	B	909,–	225,–	1134,–
EHW 1800 PE, hot-dip galvanized	B	922,–	225,–	1147,–
EHW 2200 PE, painted	B	987,–	225,–	1212,–
EHW 2200 PE, hot-dip galvanized	B	1028,–	225,–	1253,–
EHW 2700 PE, painted	B	1144,–	380,–	1524,–
EHW 2700 PE, hot-dip galvanized	B	1211,–	380,–	1591,–
EHW 3300 PE, painted	B	1653,–	380,–	2033,–
EHW 3300 PE, hot-dip galvanized	B	1727,–	380,–	2107,–

Suspended Sump Type EHW	Category	Price	Freight charges	Price including freight charges
EHW 1800, painted	B	509,–	225,–	734,–
EHW 1800, hot-dip galvanized	B	521,–	225,–	746,–
EHW 2200, painted	B	564,–	225,–	789,–
EHW 2200, hot-dip galvanized	B	605,–	225,–	830,–
EHW 2700, painted	B	648,–	278,–	926,–
EHW 2700, hot-dip galvanized	B	717,–	278,–	995,–
EHW 3300, painted	B	1002,–	380,–	1382,–
EHW 3300, hot-dip galvanized	B	1076,–	380,–	1456,–
EHW 3600, painted	B	1050,–	380,–	1430,–
EHW 3600, hot-dip galvanized	B	1131,–	380,–	1511,–

Drum Pallet Type FP	Category	Price	Freight charges	Price including freight charges
FP 2, hot-dip galvanized	B	92,–	141,–	233,–

Drum Shelve Type FR	Category	Price	Freight charges	Price including freight charges
FR-1, hot-dip galvanized	B	293,–	141,–	434,–
Can Stand Type GS, hot-dip galvanized	B	65,–	18,–	83,–
Clip-on Rotating Support, galvanized	B	85,–	10,–	95,–
FR-2, hot-dip galvanized	B	375,–	141,–	516,–
Can Stand Type GS, hot-dip galvanized	B	65,–	18,–	83,–
Clip-on Rotating Support, galvanized	B	85,–	10,–	95,–
FR-3, hot-dip galvanized	B	419,–	141,–	560,–
Can Stand Type GS, hot-dip galvanized	B	65,–	18,–	83,–
Rotating Support RA 60, hot-dip galvanized	B	97,–	9,–	106,–

Sump Tray Type FRA	Category	Price	Freight charges	Price including freight charges
FRA-1, painted	B	310,–	141,–	451,–
Grid, hot-dip galvanized	B	67,–	16,–	83,–
FRA-1, hot-dip galvanized	B	367,–	141,–	508,–
Grid, hot-dip galvanized	B	67,–	16,–	83,–
FRA-2, painted	B	322,–	141,–	463,–
Grid, hot-dip galvanized	B	132,–	24,–	156,–

Prices in EUR, valid EXW DE-46354 Südlohn, DE-38820 Halberstadt, unpacked
Freight charges valid CPT Portugal, islands and oversea territories excluded

BAUER GmbH
Eichendorffstr. 62
46354 Südlohn, Germany

Tel. +49 2862 70 90
info@bauer-suedlohn.com
www.bauer-suedlohn.com

Geschäftsführer
Patrick Bauer, Pascal Bauer
Amtsgericht Coesfeld HRB 5259

TÜVNORD
TÜV NORD CERT GmbH
DIN EN ISO 9001
tuev-nord.de

Price List 0726 en-PT
Environment / Storage

Sump Tray Type FRA	Category	Price	Freight charges	Price including freight charges
FRA-2, hot-dip galvanized	B	378,–	141,–	519,–
Grid, hot-dip galvanized	B	132,–	24,–	156,–
FRA-3, painted	B	322,–	141,–	463,–
Grid, hot-dip galvanized	B	132,–	24,–	156,–
FRA-3, hot-dip galvanized	B	378,–	141,–	519,–
Grid, hot-dip galvanized	B	132,–	24,–	156,–

Drum Shelf Type FRE/M	Category	Price	Freight charges	Price including freight charges
FRE-1/M, hot-dip galvanized	B	225,–	21,–	246,–
Clip-on Rotating Support, galvanized	B	85,–	10,–	95,–
Can Stand Type GS, hot-dip galvanized	B	65,–	18,–	83,–
FRE-2/M, hot-dip galvanized	B	261,–	22,–	283,–
Clip-on Rotating Support, galvanized	B	85,–	10,–	95,–
Can Stand Type GS, hot-dip galvanized	B	65,–	18,–	83,–
FRE-3/M, hot-dip galvanized	B	279,–	27,–	306,–
Rotating Support RA 60, hot-dip galvanized	B	97,–	9,–	106,–
Can Stand Type GS, hot-dip galvanized	B	65,–	18,–	83,–

Can Shelf Type FRE-G/M	Category	Price	Freight charges	Price including freight charges
FRE-G1/M, hot-dip galvanized	B	236,–	27,–	263,–
FRE-G2/M, hot-dip galvanized	B	274,–	32,–	306,–

Can Shelf for Small Cans Type FRG	Category	Price	Freight charges	Price including freight charges
FRG, hot-dip galvanized	B	381,–	141,–	522,–

Drum Stacking Pallet Type FSP-D	Category	Price	Freight charges	Price including freight charges
FSP-1 D, lackiert	B	845,–	225,–	1070,–
FSP-1 D, hot-dip galvanized	B	1106,–	225,–	1331,–
FSP-2 D, lackiert	B	901,–	225,–	1126,–
FSP-2 D, hot-dip galvanized	B	1222,–	225,–	1447,–
FSP-4 D, lackiert	B	1170,–	225,–	1395,–
FSP-4 D, hot-dip galvanized	B	1615,–	225,–	1840,–

Drum Stacking Pallet Type FSP-G	Category	Price	Freight charges	Price including freight charges
FSP-1 G, lackiert	B	821,–	225,–	1046,–
FSP-1 G, hot-dip galvanized	B	1089,–	225,–	1314,–
FSP-2 G, painted	B	879,–	225,–	1104,–
FSP-2 G, hot-dip galvanized	B	1197,–	225,–	1422,–
FSP-4 G, painted	B	1148,–	327,–	1475,–
FSP-4 G, hot-dip galvanized	B	1587,–	327,–	1914,–

Drum Stacking Pallet Type FSP	Category	Price	Freight charges	Price including freight charges
FSP-1, painted	B	484,–	141,–	625,–
FSP-1, hot-dip galvanized	B	727,–	225,–	952,–
FSP-2, painted	B	655,–	225,–	880,–

Prices in EUR, valid EXW DE-46354 Südlohn, DE-38820 Halberstadt, unpacked
Freight charges valid CPT Portugal, islands and oversea territories excluded

BAUER GmbH
Eichendorffstr. 62
46354 Südlohn, Germany

Tel. +49 2862 70 90
info@bauer-suedlohn.com
www.bauer-suedlohn.com

Geschäftsführer
Patrick Bauer, Pascal Bauer
Amtsgericht Coesfeld HRB 5259

TÜVNORD
TÜV NORD CERT GmbH
DIN EN ISO 9001
tuev-nord.de

Price List 0726 en-PT
Environment / Storage

Drum Stacking Pallet Type FSP	Category	Price	Freight charges	Price including freight charges
FSP-2, hot-dip galvanized	B	913,–	225,–	1138,–
FSP-4, painted	B	746,–	225,–	971,–
FSP-4, hot-dip galvanized	B	1151,–	225,–	1376,–

Hazardous Materials Depot Type GD-A	Category	Price	Freight charges	Price including freight charges
GD-A, painted	C	762,–	225,–	987,–
Drum Support FA 60-1, hot-dip galvanized	B	109,–	15,–	124,–
Drum Support FA 60-2, hot-dip galvanized	B	118,–	18,–	136,–
Drum Support FA 60-3, hot-dip galvanized	B	138,–	21,–	159,–
Can Shelf Type GR-A, galvanized	B	138,–	60,–	198,–
Can Shelf Type GR-B, galvanized	B	138,–	60,–	198,–
Can Shelf Type GR-C, galvanized	B	138,–	60,–	198,–
GD-A, hot-dip galvanized	C	960,–	225,–	1185,–
Drum Support FA 60-1, hot-dip galvanized	B	109,–	15,–	124,–
Drum Support FA 60-2, hot-dip galvanized	B	118,–	18,–	136,–
Drum Support FA 60-3, hot-dip galvanized	B	138,–	21,–	159,–
Can Shelf Type GR-A, galvanized	B	138,–	60,–	198,–
Can Shelf Type GR-B, galvanized	B	138,–	60,–	198,–
Can Shelf Type GR-C, galvanized	B	138,–	60,–	198,–

Hazardous Materials Depot Type GD-B	Category	Price	Freight charges	Price including freight charges
GD-B, painted	C	1363,–	225,–	1588,–
Drum Support FA 60-1, hot-dip galvanized	B	109,–	15,–	124,–
Drum Support FA 60-2, hot-dip galvanized	B	118,–	18,–	136,–
Drum Support FA 60-3, hot-dip galvanized	B	138,–	21,–	159,–
Can Shelf Type GR-A, galvanized	B	138,–	60,–	198,–
Can Shelf Type GR-B, galvanized	B	138,–	60,–	198,–
Can Shelf Type GR-C, galvanized	B	138,–	60,–	198,–
GD-B, hot-dip galvanized	C	1625,–	225,–	1850,–
Drum Support FA 60-1, hot-dip galvanized	B	109,–	15,–	124,–
Drum Support FA 60-2, hot-dip galvanized	B	118,–	18,–	136,–
Drum Support FA 60-3, hot-dip galvanized	B	138,–	21,–	159,–
Can Shelf Type GR-A, galvanized	B	138,–	60,–	198,–
Can Shelf Type GR-B, galvanized	B	138,–	60,–	198,–
Can Shelf Type GR-C, galvanized	B	138,–	60,–	198,–

Hazardous Materials Depot Type GD-C	Category	Price	Freight charges	Price including freight charges
GD-C, painted	C	1163,–	225,–	1388,–
Drum Support FA 60-1, hot-dip galvanized	B	109,–	15,–	124,–
Drum Support FA 60-2, hot-dip galvanized	B	118,–	18,–	136,–
Drum Support FA 60-3, hot-dip galvanized	B	138,–	21,–	159,–
Can Shelf Type GR-A, galvanized	B	138,–	60,–	198,–
Can Shelf Type GR-B, galvanized	B	138,–	60,–	198,–
Can Shelf Type GR-C, galvanized	B	138,–	60,–	198,–
GD-C, hot-dip galvanized	C	1314,–	225,–	1539,–

Prices in EUR, valid EXW DE-46354 Südlohn, DE-38820 Halberstadt, unpacked
Freight charges valid CPT Portugal, islands and oversea territories excluded

BAUER GmbH
Eichendorffstr. 62
46354 Südlohn, Germany

Tel. +49 2862 70 90
info@bauer-suedlohn.com
www.bauer-suedlohn.com

Geschäftsführer
Patrick Bauer, Pascal Bauer
Amtsgericht Coesfeld HRB 5259

TÜVNORD
TÜV NORD CERT GmbH
DIN EN ISO 9001
tuev-nord.de

Price List 0726 en-PT
Environment / Storage

Hazardous Materials Depot Type GD-C	Category	Price	Freight charges	Price including freight charges
Drum Support FA 60-1, hot-dip galvanized	B	109,–	15,–	124,–
Drum Support FA 60-2, hot-dip galvanized	B	118,–	18,–	136,–
Drum Support FA 60-3, hot-dip galvanized	B	138,–	21,–	159,–
Can Shelf Type GR-A, galvanized	B	138,–	60,–	198,–
Can Shelf Type GR-B, galvanized	B	138,–	60,–	198,–
Can Shelf Type GR-C, galvanized	B	138,–	60,–	198,–

Hazardous Materials Depot Type GD-E	Category	Price	Freight charges	Price including freight charges
GD-E 2, galvanized	C	1562,–	327,–	1889,–
Drum Support FA 60-1, hot-dip galvanized	B	109,–	15,–	124,–
Drum Support FA 60-2, hot-dip galvanized	B	118,–	18,–	136,–
Drum Support FA 60-3, hot-dip galvanized	B	138,–	21,–	159,–
Can Shelf Type GR-A, galvanized	B	138,–	60,–	198,–
Can Shelf Type GR-B, galvanized	B	138,–	60,–	198,–
Can Shelf Type GR-C, galvanized	B	138,–	60,–	198,–
GD-E 4, galvanized	C	1907,–	398,–	2305,–
Drum Support FA 60-1, hot-dip galvanized	B	109,–	15,–	124,–
Drum Support FA 60-2, hot-dip galvanized	B	118,–	18,–	136,–
Drum Support FA 60-3, hot-dip galvanized	B	138,–	21,–	159,–
Can Shelf Type GR-A, galvanized	B	138,–	60,–	198,–
Can Shelf Type GR-B, galvanized	B	138,–	60,–	198,–
Can Shelf Type GR-C, galvanized	B	138,–	60,–	198,–

Hazardous Materials Depot Type GD-E/IBC	Category	Price	Freight charges	Price including freight charges
GD-E/IBC, galvanized	C	2367,–	1120,–	3487,–
GD-E/IBC-2, galvanized	C	3552,–	426,–	3978,–

Hazardous Materials Depot Type GD-N	Category	Price	Freight charges	Price including freight charges
GD-N 2, galvanized	C	1362,–	327,–	1689,–
Intermediate Storage Level, hot-dip galvanized	C	106,–	18,–	124,–
Drum Support FA 60-1, hot-dip galvanized	B	109,–	15,–	124,–
Can Shelf Type GR-A, galvanized	B	138,–	60,–	198,–
Can Shelf Type GR-B, galvanized	B	138,–	60,–	198,–
Can Shelf Type GR-C, galvanized	B	138,–	60,–	198,–
GD-N 4, galvanized	C	1697,–	327,–	2024,–
Intermediate Storage Level, hot-dip galvanized	C	106,–	18,–	124,–
Drum Support FA 60-1, hot-dip galvanized	B	109,–	15,–	124,–
Drum Support FA 60-2, hot-dip galvanized	B	118,–	18,–	136,–
Drum Support FA 200-1, hot-dip galvanized	B	118,–	15,–	133,–
Drum Support FA 200-2, hot-dip galvanized	B	138,–	22,–	160,–
Can Shelf Type GR-A, galvanized	B	138,–	60,–	198,–
Can Shelf Type GR-B, galvanized	B	138,–	60,–	198,–
Can Shelf Type GR-C, galvanized	B	138,–	60,–	198,–

Prices in EUR, valid EXW DE-46354 Südlohn, DE-38820 Halberstadt, unpacked
Freight charges valid CPT Portugal, islands and oversea territories excluded

BAUER GmbH
Eichendorffstr. 62
46354 Südlohn, Germany

Tel. +49 2862 70 90
info@bauer-suedlohn.com
www.bauer-suedlohn.com

Geschäftsführer
Patrick Bauer, Pascal Bauer
Amtsgericht Coesfeld HRB 5259

TÜVNORD
TÜV NORD CERT GmbH
DIN EN ISO 9001
tuev-nord.de

Price List 0726 en-PT
Environment / Storage

Hazardous Materials DepotType GD-N/R	Category	Price	Freight charges	Price including freight charges
GD-N/R 2, galvanized	C	1562,–	327,–	1889,–
Intermediate Storage Level, hot-dip galvanized	C	106,–	18,–	124,–
Drum Support FA 60-1, hot-dip galvanized	B	109,–	15,–	124,–
Can Shelf Type GR-A, galvanized	B	138,–	60,–	198,–
Can Shelf Type GR-B, galvanized	B	138,–	60,–	198,–
Can Shelf Type GR-C, galvanized	B	138,–	60,–	198,–
GD-N/R 4, galvanized	C	1901,–	327,–	2228,–
Intermediate Storage Level, hot-dip galvanized	C	106,–	18,–	124,–
Drum Support FA 60-1, hot-dip galvanized	B	109,–	15,–	124,–
Drum Support FA 60-2, hot-dip galvanized	B	118,–	18,–	136,–
Drum Support FA 200-1, hot-dip galvanized	B	118,–	15,–	133,–
Drum Support FA 200-2, hot-dip galvanized	B	138,–	22,–	160,–
Can Shelf Type GR-A, galvanized	B	138,–	60,–	198,–
Can Shelf Type GR-B, galvanized	B	138,–	60,–	198,–
Can Shelf Type GR-C, galvanized	B	138,–	60,–	198,–

Gas Cylinder Containers Type GFC-B	Category	Price	Freight charges	Price including freight charges
GFC-B M0, painted	B	3406,–	1120,–	4526,–
Fixture with Safety Chain to Secure Gas Cylinders, hot-dip galvanized	B	72,–	12,–	84,–
Rack for Gas Cylinders GFG-2, galvanized	B	204,–	141,–	345,–
GFC-B M1, painted	B	3949,–	1346,–	5295,–
Fixture with Safety Chain to Secure Gas Cylinders, hot-dip galvanized	B	72,–	12,–	84,–
Rack for Gas Cylinders GFG-2, galvanized	B	204,–	141,–	345,–
GFC-B M2, painted	B	4114,–	1346,–	5460,–
Fixture with Safety Chain to Secure Gas Cylinders, hot-dip galvanized	B	72,–	12,–	84,–
Rack for Gas Cylinders GFG-2, galvanized	B	204,–	141,–	345,–
GFC-B M3, painted	B	4761,–	1346,–	6107,–
Fixture with Safety Chain to Secure Gas Cylinders, hot-dip galvanized	B	72,–	12,–	84,–
Rack for Gas Cylinders GFG-2, galvanized	B	204,–	141,–	345,–
GFC-B M4, painted	B	5355,–	1529,–	6884,–
Fixture with Safety Chain to Secure Gas Cylinders, hot-dip galvanized	B	72,–	12,–	84,–
Rack for Gas Cylinders GFG-2, galvanized	B	204,–	141,–	345,–
GFC-B M5, painted	B	7439,–	1529,–	8968,–
Fixture with Safety Chain to Secure Gas Cylinders, hot-dip galvanized	B	72,–	12,–	84,–
Rack for Gas Cylinders GFG-2, galvanized	B	204,–	141,–	345,–

Gas Cylinder Containers Type GFC-B/W	Category	Price	Freight charges	Price including freight charges
GFC-B/W M1, painted	B	4216,–	1346,–	5562,–
Fixture with Safety Chain to Secure Gas Cylinders, hot-dip galvanized	B	72,–	12,–	84,–
GFC-B/W M2, painted	B	4421,–	1346,–	5767,–
Fixture with Safety Chain to Secure Gas Cylinders, hot-dip galvanized	B	72,–	12,–	84,–
GFC-B/W M3, painted	B	5076,–	1346,–	6422,–
Fixture with Safety Chain to Secure Gas Cylinders, hot-dip galvanized	B	72,–	12,–	84,–
Rack for Gas Cylinders GFG-2, galvanized	B	204,–	141,–	345,–
GFC-B/W M4, painted	B	5675,–	1529,–	7204,–

Prices in EUR, valid EXW DE-46354 Südlohn, DE-38820 Halberstadt, unpacked
Freight charges valid CPT Portugal, islands and oversea territories excluded

BAUER GmbH
Eichendorffstr. 62
46354 Südlohn, Germany

Tel. +49 2862 70 90
info@bauer-suedlohn.com
www.bauer-suedlohn.com

Geschäftsführer
Patrick Bauer, Pascal Bauer
Amtsgericht Coesfeld HRB 5259

TÜVNORD
TÜV NORD CERT GmbH
DIN EN ISO 9001
tuev-nord.de

Price List 0726 en-PT
Environment / Storage

Gas Cylinder Containers Type GFC-B/W	Category	Price	Freight charges	Price including freight charges
Fixture with Safety Chain to Secure Gas Cylinders, hot-dip galvanized	B	72,–	12,–	84,–
Rack for Gas Cylinders GFG-2, galvanized	B	204,–	141,–	345,–
GFC-B/W M5, painted	B	7844,–	1529,–	9373,–
Fixture with Safety Chain to Secure Gas Cylinders, hot-dip galvanized	B	72,–	12,–	84,–
Rack for Gas Cylinders GFG-2, galvanized	B	204,–	141,–	345,–

Gas Cylinder Containers Type GFC-E/G	Category	Price	Freight charges	Price including freight charges
GFC-E/G M0, hot-dip galvanized	B	1540,–	327,–	1867,–
Fixture with Safety Chain to Secure Gas Cylinders, hot-dip galvanized	B	40,–	12,–	52,–
Rack for Gas Cylinders GFG-2, galvanized	B	204,–	141,–	345,–
Access Ramp Type AR, galvanized	B	163,–	22,–	185,–
GFC-E/G M1, hot-dip galvanized	B	2191,–	1346,–	3537,–
Fixture with Safety Chain to Secure Gas Cylinders, hot-dip galvanized	B	40,–	12,–	52,–
Rack for Gas Cylinders GFG-2, galvanized	B	204,–	141,–	345,–
Access Ramp Type AR, galvanized	B	163,–	22,–	185,–
Central Dividing Wall, galvanized	B	87,–	22,–	109,–
GFC-E/G M2, hot-dip galvanized	B	2401,–	1346,–	3747,–
Fixture with Safety Chain to Secure Gas Cylinders, hot-dip galvanized	B	40,–	12,–	52,–
Rack for Gas Cylinders GFG-2, galvanized	B	204,–	141,–	345,–
Access Ramp Type AR, galvanized	B	163,–	22,–	185,–
Central Dividing Wall, galvanized	B	129,–	32,–	161,–
GFC-E/G M3, hot-dip galvanized	B	2671,–	1346,–	4017,–
Fixture with Safety Chain to Secure Gas Cylinders, hot-dip galvanized	B	40,–	12,–	52,–
Rack for Gas Cylinders GFG-2, galvanized	B	204,–	141,–	345,–
Access Ramp Type AR, galvanized	B	163,–	22,–	185,–
Central Dividing Wall, galvanized	B	129,–	32,–	161,–
GFC-E/G M4, hot-dip galvanized	B	2895,–	1529,–	4424,–
Fixture with Safety Chain to Secure Gas Cylinders, hot-dip galvanized	B	40,–	12,–	52,–
Rack for Gas Cylinders GFG-2, galvanized	B	204,–	141,–	345,–
Access Ramp Type AR, galvanized	B	163,–	22,–	185,–
Central Dividing Wall, galvanized	B	129,–	32,–	161,–
GFC-E/G M5, hot-dip galvanized	B	3587,–	1529,–	5116,–
Fixture with Safety Chain to Secure Gas Cylinders, hot-dip galvanized	B	40,–	12,–	52,–
Rack for Gas Cylinders GFG-2, galvanized	B	204,–	141,–	345,–
Access Ramp Type AR, galvanized	B	163,–	22,–	185,–
Central Dividing Wall, galvanized	B	191,–	40,–	231,–

Gas Cylinder Containers Type GFC-E/T	Category	Price	Freight charges	Price including freight charges
GFC-E/T M0, hot-dip galvanized	B	1560,–	327,–	1887,–
Fixture with Safety Chain to Secure Gas Cylinders, hot-dip galvanized	B	40,–	12,–	52,–
Rack for Gas Cylinders GFG-2, galvanized	B	204,–	141,–	345,–
Access Ramp Type AR, galvanized	B	163,–	22,–	185,–
GFC-E/T M1, hot-dip galvanized	B	2229,–	1346,–	3575,–
Fixture with Safety Chain to Secure Gas Cylinders, hot-dip galvanized	B	40,–	12,–	52,–
Rack for Gas Cylinders GFG-2, galvanized	B	204,–	141,–	345,–

Prices in EUR, valid EXW DE-46354 Südlohn, DE-38820 Halberstadt, unpacked
Freight charges valid CPT Portugal, islands and oversea territories excluded

BAUER GmbH
Eichendorffstr. 62
46354 Südlohn, Germany

Tel. +49 2862 70 90
info@bauer-suedlohn.com
www.bauer-suedlohn.com

Geschäftsführer
Patrick Bauer, Pascal Bauer
Amtsgericht Coesfeld HRB 5259

TÜVNORD
TÜV NORD CERT GmbH
DIN EN ISO 9001
tuev-nord.de

Price List 0726 en-PT
Environment / Storage

Gas Cylinder Containers Type GFC-E/T	Category	Price	Freight charges	Price including freight charges
Access Ramp Type AR, galvanized	B	163,–	22,–	185,–
Central Dividing Wall, galvanized	B	87,–	22,–	109,–
GFC-E/T M2, hot-dip galvanized	B	2448,–	1346,–	3794,–
Fixture with Safety Chain to Secure Gas Cylinders, hot-dip galvanized	B	40,–	12,–	52,–
Rack for Gas Cylinders GFG-2, galvanized	B	204,–	141,–	345,–
Access Ramp Type AR, galvanized	B	163,–	22,–	185,–
Central Dividing Wall, galvanized	B	129,–	32,–	161,–
GFC-E/T M3, hot-dip galvanized	B	2737,–	1346,–	4083,–
Fixture with Safety Chain to Secure Gas Cylinders, hot-dip galvanized	B	40,–	12,–	52,–
Rack for Gas Cylinders GFG-2, galvanized	B	204,–	141,–	345,–
Access Ramp Type AR, galvanized	B	163,–	22,–	185,–
Central Dividing Wall, galvanized	B	129,–	32,–	161,–
GFC-E/T M4, hot-dip galvanized	B	2960,–	1529,–	4489,–
Fixture with Safety Chain to Secure Gas Cylinders, hot-dip galvanized	B	40,–	12,–	52,–
Rack for Gas Cylinders GFG-2, galvanized	B	204,–	141,–	345,–
Access Ramp Type AR, galvanized	B	163,–	22,–	185,–
Central Dividing Wall, galvanized	B	129,–	32,–	161,–
GFC-E/T M5, hot-dip galvanized	B	3678,–	1529,–	5207,–
Fixture with Safety Chain to Secure Gas Cylinders, hot-dip galvanized	B	40,–	12,–	52,–
Rack for Gas Cylinders GFG-2, galvanized	B	204,–	141,–	345,–
Access Ramp Type AR, galvanized	B	163,–	22,–	185,–
Central Dividing Wall, galvanized	B	191,–	40,–	231,–

Gas Cylinder Containers Type GFC-M/D	Category	Price	Freight charges	Price including freight charges
GFC-M0/D, hot-dip galvanized	B	1028,–	225,–	1253,–
Grid Floor, hot-dip galvanized	B	152,–	72,–	224,–
Fixture with Safety Chain to Secure Gas Cylinders, hot-dip galvanized	B	40,–	12,–	52,–
Rack for Gas Cylinders GFG-2, galvanized	B	204,–	141,–	345,–
GFC-M1/D, hot-dip galvanized	B	1247,–	327,–	1574,–
Grid Floor, hot-dip galvanized	B	274,–	141,–	415,–
Fixture with Safety Chain to Secure Gas Cylinders, hot-dip galvanized	B	40,–	12,–	52,–
Rack for Gas Cylinders GFG-2, galvanized	B	204,–	141,–	345,–
GFC-M2/D, hot-dip galvanized	B	1327,–	327,–	1654,–
Grid Floor, hot-dip galvanized	B	375,–	141,–	516,–
Fixture with Safety Chain to Secure Gas Cylinders, hot-dip galvanized	B	40,–	12,–	52,–
Rack for Gas Cylinders GFG-2, galvanized	B	204,–	141,–	345,–
GFC-M3/D, hot-dip galvanized	B	1498,–	327,–	1825,–
Grid Floor, hot-dip galvanized	B	510,–	225,–	735,–
Fixture with Safety Chain to Secure Gas Cylinders, hot-dip galvanized	B	40,–	12,–	52,–
Rack for Gas Cylinders GFG-2, galvanized	B	204,–	141,–	345,–
GFC-M4/D, hot-dip galvanized	B	1601,–	327,–	1928,–
Grid Floor, hot-dip galvanized	B	627,–	225,–	852,–
Fixture with Safety Chain to Secure Gas Cylinders, hot-dip galvanized	B	40,–	12,–	52,–
Rack for Gas Cylinders GFG-2, galvanized	B	204,–	141,–	345,–
GFC-M5/D, hot-dip galvanized	B	1903,–	398,–	2301,–
Grid Floor, hot-dip galvanized	B	765,–	225,–	990,–

Prices in EUR, valid EXW DE-46354 Südlohn, DE-38820 Halberstadt, unpacked
Freight charges valid CPT Portugal, islands and oversea territories excluded

BAUER GmbH
Eichendorffstr. 62
46354 Südlohn, Germany

Tel. +49 2862 70 90
info@bauer-suedlohn.com
www.bauer-suedlohn.com

Geschäftsführer
Patrick Bauer, Pascal Bauer
Amtsgericht Coesfeld HRB 5259

TÜVNORD
TÜV NORD CERT GmbH
DIN EN ISO 9001
tuev-nord.de

Price List 0726 en-PT
Environment / Storage

Gas Cylinder Containers Type GFC-M/D	Category	Price	Freight charges	Price including freight charges
Fixture with Safety Chain to Secure Gas Cylinders, hot-dip galvanized	B	40,–	12,–	52,–
Rack for Gas Cylinders GFG-2, galvanized	B	204,–	141,–	345,–

Gas Cylinder Containers Type GFC-M	Category	Price	Freight charges	Price including freight charges
GFC-M1, hot-dip galvanized	B	1101,–	225,–	1326,–
Grid Floor, hot-dip galvanized	B	274,–	141,–	415,–
Fixture with Safety Chain to Secure Gas Cylinders, hot-dip galvanized	B	40,–	12,–	52,–
Rack for Gas Cylinders GFG-2, galvanized	B	204,–	141,–	345,–
GFC-M2, hot-dip galvanized	B	1169,–	327,–	1496,–
Grid Floor, hot-dip galvanized	B	375,–	141,–	516,–
Fixture with Safety Chain to Secure Gas Cylinders, hot-dip galvanized	B	40,–	12,–	52,–
Rack for Gas Cylinders GFG-2, galvanized	B	204,–	141,–	345,–
GFC-M3, hot-dip galvanized	B	1312,–	327,–	1639,–
Grid Floor, hot-dip galvanized	B	510,–	225,–	735,–
Fixture with Safety Chain to Secure Gas Cylinders, hot-dip galvanized	B	40,–	12,–	52,–
Rack for Gas Cylinders GFG-2, galvanized	B	204,–	141,–	345,–
GFC-M4, hot-dip galvanized	B	1380,–	327,–	1707,–
Grid Floor, hot-dip galvanized	B	627,–	225,–	852,–
Fixture with Safety Chain to Secure Gas Cylinders, hot-dip galvanized	B	40,–	12,–	52,–
Rack for Gas Cylinders GFG-2, galvanized	B	204,–	141,–	345,–
GFC-M5, hot-dip galvanized	B	1602,–	327,–	1929,–
Grid Floor, hot-dip galvanized	B	765,–	225,–	990,–
Fixture with Safety Chain to Secure Gas Cylinders, hot-dip galvanized	B	40,–	12,–	52,–
Rack for Gas Cylinders GFG-2, galvanized	B	204,–	141,–	345,–

Gas Cylinder Containers Type GFC-M/D-DF	Category	Price	Freight charges	Price including freight charges
GFC-M1/D-DF, hot-dip galvanized	B	1424,–	327,–	1751,–
Grid Floor, hot-dip galvanized	B	274,–	141,–	415,–
Fixture with Safety Chain to Secure Gas Cylinders, hot-dip galvanized	B	40,–	12,–	52,–
Rack for Gas Cylinders GFG-2, galvanized	B	204,–	141,–	345,–
GFC-M2/D-DF, hot-dip galvanized	B	1503,–	327,–	1830,–
Grid Floor, hot-dip galvanized	B	375,–	141,–	516,–
Fixture with Safety Chain to Secure Gas Cylinders, hot-dip galvanized	B	40,–	12,–	52,–
Rack for Gas Cylinders GFG-2, galvanized	B	204,–	141,–	345,–
GFC-M3/D-DF, hot-dip galvanized	B	1675,–	327,–	2002,–
Grid Floor, hot-dip galvanized	B	510,–	225,–	735,–
Fixture with Safety Chain to Secure Gas Cylinders, hot-dip galvanized	B	40,–	12,–	52,–
Rack for Gas Cylinders GFG-2, galvanized	B	204,–	141,–	345,–
GFC-M4/D-DF, hot-dip galvanized	B	1810,–	398,–	2208,–
Grid Floor, hot-dip galvanized	B	627,–	225,–	852,–
Fixture with Safety Chain to Secure Gas Cylinders, hot-dip galvanized	B	40,–	12,–	52,–
Rack for Gas Cylinders GFG-2, galvanized	B	204,–	141,–	345,–
GFC-M5/D-DF, hot-dip galvanized	B	2112,–	398,–	2510,–
Grid Floor, hot-dip galvanized	B	765,–	225,–	990,–
Fixture with Safety Chain to Secure Gas Cylinders, hot-dip galvanized	B	40,–	12,–	52,–

Prices in EUR, valid EXW DE-46354 Südlohn, DE-38820 Halberstadt, unpacked
Freight charges valid CPT Portugal, islands and oversea territories excluded

BAUER GmbH
Eichendorffstr. 62
46354 Südlohn, Germany

Tel. +49 2862 70 90
info@bauer-suedlohn.com
www.bauer-suedlohn.com

Geschäftsführer
Patrick Bauer, Pascal Bauer
Amtsgericht Coesfeld HRB 5259

TÜVNORD
TÜV NORD CERT GmbH
DIN EN ISO 9001
tuev-nord.de

Price List 0726 en-PT
Environment / Storage

Gas Cylinder Containers Type GFC-M/D-DF	Category	Price	Freight charges	Price including freight charges
Rack for Gas Cylinders GFG-2, galvanized	B	204,–	141,–	345,–
GFC-M6/D-DF, hot-dip galvanized	B	2775,–	567,–	3342,–
Fixture with Safety Chain to Secure Gas Cylinders, hot-dip galvanized	B	40,–	12,–	52,–
Rack for Gas Cylinders GFG-2, galvanized	B	204,–	141,–	345,–

Gas Cylinder Containers Type GFC-M-DF	Category	Price	Freight charges	Price including freight charges
GFC-M1-DF, hot-dip galvanized	B	1276,–	225,–	1501,–
Grid Floor, hot-dip galvanized	B	274,–	141,–	415,–
Fixture with Safety Chain to Secure Gas Cylinders, hot-dip galvanized	B	40,–	12,–	52,–
Rack for Gas Cylinders GFG-2, galvanized	B	204,–	141,–	345,–
GFC-M2-DF, hot-dip galvanized	B	1346,–	327,–	1673,–
Grid Floor, hot-dip galvanized	B	375,–	141,–	516,–
Fixture with Safety Chain to Secure Gas Cylinders, hot-dip galvanized	B	40,–	12,–	52,–
Rack for Gas Cylinders GFG-2, galvanized	B	204,–	141,–	345,–
GFC-M3-DF, hot-dip galvanized	B	1490,–	327,–	1817,–
Grid Floor, hot-dip galvanized	B	510,–	225,–	735,–
Fixture with Safety Chain to Secure Gas Cylinders, hot-dip galvanized	B	40,–	12,–	52,–
Rack for Gas Cylinders GFG-2, galvanized	B	204,–	141,–	345,–
GFC-M4-DF, hot-dip galvanized	B	1591,–	327,–	1918,–
Grid Floor, hot-dip galvanized	B	627,–	225,–	852,–
Fixture with Safety Chain to Secure Gas Cylinders, hot-dip galvanized	B	40,–	12,–	52,–
Rack for Gas Cylinders GFG-2, galvanized	B	204,–	141,–	345,–
GFC-M5-DF, hot-dip galvanized	B	1812,–	398,–	2210,–
Grid Floor, hot-dip galvanized	B	765,–	225,–	990,–
Fixture with Safety Chain to Secure Gas Cylinders, hot-dip galvanized	B	40,–	12,–	52,–
Rack for Gas Cylinders GFG-2, galvanized	B	204,–	141,–	345,–

Gas Cylinder Depot Type GFD-G	Category	Price	Freight charges	Price including freight charges
GFD-G 1, galvanized	B	429,–	225,–	654,–
GFD-G 2, galvanized	B	790,–	225,–	1015,–

Gas Cylinder Depot Type GFD-L	Category	Price	Freight charges	Price including freight charges
GFD-L 1, galvanized	B	462,–	141,–	603,–
GFD-L 2, galvanized	B	880,–	225,–	1105,–

Gas Cylinder Depot Type GFD-R	Category	Price	Freight charges	Price including freight charges
GFD-R 2, painted	B	774,–	141,–	915,–
GFD-R 2, hot-dip galvanized	B	798,–	141,–	939,–
GFD-R 4, painted	B	879,–	141,–	1020,–
GFD-R 4, hot-dip galvanized	B	909,–	141,–	1050,–

Hazardous Materials Cabinet Type GS	Category	Price	Freight charges	Price including freight charges
GS-1, painted	B	789,–	225,–	1014,–
Intermediate Storage Level, galvanized	B	90,–	14,–	104,–
GS-1, hot-dip galvanized	B	849,–	225,–	1074,–

Prices in EUR, valid EXW DE-46354 Südlohn, DE-38820 Halberstadt, unpacked
Freight charges valid CPT Portugal, islands and oversea territories excluded

BAUER GmbH
Eichendorffstr. 62
46354 Südlohn, Germany

Tel. +49 2862 70 90
info@bauer-suedlohn.com
www.bauer-suedlohn.com

Geschäftsführer
Patrick Bauer, Pascal Bauer
Amtsgericht Coesfeld HRB 5259

TÜVNORD
TÜV NORD CERT GmbH
DIN EN ISO 9001
tuev-nord.de

Price List 0726 en-PT
Environment / Storage

Hazardous Materials Cabinet Type GS	Category	Price	Freight charges	Price including freight charges
Intermediate Storage Level, galvanized	B	90,–	14,–	104,–
GS-2, painted	B	1049,–	327,–	1376,–
Intermediate Storage Level, galvanized	B	90,–	14,–	104,–
GS-2, hot-dip galvanized	B	1139,–	327,–	1466,–
Intermediate Storage Level, galvanized	B	90,–	14,–	104,–
GS-3, painted	B	2143,–	398,–	2541,–
GS-3, hot-dip galvanized	B	2295,–	398,–	2693,–
GS-4, painted	B	2154,–	1120,–	3274,–
GS-4, hot-dip galvanized	B	2340,–	1120,–	3460,–

Gas Cylinder Wall Bracket Type GWH	Category	Price	Freight charges	Price including freight charges
GWH 140-I, hot-dip galvanized	F	26,–	60,–	86,–
GWH 140-II, hot-dip galvanized	F	40,–	60,–	100,–
GWH 140-III, hot-dip galvanized	F	59,–	60,–	119,–
GWH 230-I, hot-dip galvanized	F	28,–	60,–	88,–
GWH 230-II, hot-dip galvanized	F	43,–	60,–	103,–
GWH 230-III, hot-dip galvanized	F	65,–	60,–	125,–
GWH 320-I, hot-dip galvanized	F	29,–	60,–	89,–
GWH 320-II, hot-dip galvanized	F	48,–	60,–	108,–
GWH 320-III, hot-dip galvanized	F	72,–	60,–	132,–

Tilting Canister Stand Type KAH	Category	Price	Freight charges	Price including freight charges
KAH-5, galvanized	A	96,–	60,–	156,–
KAH-25, galvanized	A	109,–	60,–	169,–
KAH-60, galvanized	A	140,–	60,–	200,–

Spill Tray for Canisters/Small Cans Type KGW	Category	Price	Freight charges	Price including freight charges
KGW 1, galvanized	B	92,–	60,–	152,–
KGW 1 V4A, stainless steel 1.4571	B	280,–	60,–	340,–
KGW 2, galvanized	B	96,–	60,–	156,–
KGW 2 V4A, stainless steel 1.4571	B	322,–	60,–	382,–
KGW 3, galvanized	B	100,–	60,–	160,–
KGW 3 V4A, stainless steel 1.4571	B	400,–	60,–	460,–
KGW 4, galvanized	B	117,–	141,–	258,–
KGW 4 V4A, stainless steel 1.4571	B	472,–	141,–	613,–
KGW 5, galvanized	B	161,–	141,–	302,–
KGW 5 V4A, stainless steel 1.4571	B	614,–	141,–	755,–

Spill Tray for Canisters/Small Cans Type KGW/M	Category	Price	Freight charges	Price including freight charges
KGW 1/M, galvanized	B	129,–	60,–	189,–
KGW 1/M V4A, stainless steel 1.4571	B	421,–	60,–	481,–
KGW 2/M, galvanized	B	137,–	60,–	197,–
KGW 2/M V4A, stainless steel 1.4571	B	485,–	60,–	545,–
KGW 3/M, galvanized	B	157,–	60,–	217,–
KGW 3/M V4A, stainless steel 1.4571	B	610,–	60,–	670,–

Prices in EUR, valid EXW DE-46354 Südlohn, DE-38820 Halberstadt, unpacked
Freight charges valid CPT Portugal, islands and oversea territories excluded

BAUER GmbH
Eichendorffstr. 62
46354 Südlohn, Germany

Tel. +49 2862 70 90
info@bauer-suedlohn.com
www.bauer-suedlohn.com

Geschäftsführer
Patrick Bauer, Pascal Bauer
Amtsgericht Coesfeld HRB 5259

TÜVNORD
TÜV NORD CERT GmbH
DIN EN ISO 9001
tuev-nord.de

Price List 0726 en-PT
Environment / Storage

Spill Tray for Canisters/Small Cans Type KGW/M	Category	Price	Freight charges	Price including freight charges
KGW 4/M, galvanized	B	182,–	141,–	323,–
KGW 4/M V4A, stainless steel 1.4571	B	730,–	141,–	871,–
KGW 5/M, galvanized	B	235,–	141,–	376,–
KGW 5/M V4A, stainless steel 1.4571	B	962,–	141,–	1103,–

Spill Tray for Canisters/Small Cans on Pallets Type KGW-P	Category	Price	Freight charges	Price including freight charges
KGW-P 1, galvanized	B	98,–	60,–	158,–
KGW-P 1 V4A, stainless steel 1.4571	B	276,–	60,–	336,–
KGW-P 2, galvanized	B	147,–	60,–	207,–
KGW-P 2 V4A, stainless steel 1.4571	B	396,–	60,–	456,–
KGW-P 3, galvanized	B	185,–	141,–	326,–
KGW-P 3 V4A, stainless steel 1.4571	B	607,–	60,–	667,–
KGW-P 4, galvanized	B	175,–	60,–	235,–
KGW-P 4 V4A, stainless steel 1.4571	B	466,–	60,–	526,–

Spill Tray for Canisters/Small Cans on Pallets Type KGW-P/M	Category	Price	Freight charges	Price including freight charges
KGW-P 1/M, galvanized	B	142,–	60,–	202,–
KGW-P 1/M V4A, stainless steel 1.4571	B	399,–	60,–	459,–
KGW-P 2/M, galvanized	B	218,–	60,–	278,–
KGW-P 2/M V4A, stainless steel 1.4571	B	579,–	60,–	639,–
KGW-P 3/M, galvanized	B	265,–	141,–	406,–
KGW-P 3/M V4A, stainless steel 1.4571	B	895,–	141,–	1036,–
KGW-P 4/M, galvanized	B	250,–	141,–	391,–
KGW-P 4/M V4A, stainless steel 1.4571	B	719,–	60,–	779,–

Diesel Filling Point Type KPS	Category	Price	Freight charges	Price including freight charges
KPS 1, painted	B	2966,–	on request	on request
KPS 2, painted	B	3854,–	on request	on request
KPS 3, painted	B	5432,–	on request	on request

Polyethylene Sump Tray for Pallets Type KWP-P	Category	Price	Freight charges	Price including freight charges
KWP-P 20, made of robust polyethylene	B	48,–	60,–	108,–
Deck with Punched Holes LR-PE 20, robust polyethylene, black	B	64,–	14,–	78,–
KWP-P 30, made of robust polyethylene	B	58,–	60,–	118,–
Deck with Punched Holes LR-PE 30, robust polyethylene, black	B	66,–	14,–	80,–
KWP-P 40, made of robust polyethylene	B	65,–	60,–	125,–
Deck with Punched Holes LR-PE 40, robust polyethylene, black	B	70,–	14,–	84,–
KWP-P 60, made of robust polyethylene	B	103,–	60,–	163,–
Deck with punched holes LR-PE 60, robust polyethylene, black	B	73,–	14,–	87,–
KWP-P 100, made of robust polyethylene	B	117,–	141,–	258,–
Deck with punched holes LR-PE 100, robust polyethylene, black	B	90,–	16,–	106,–

Mobile Sump Tray with Perforated Panel Type LPW	Category	Price	Freight charges	Price including freight charges
LPW 60-1, painted	B	627,–	141,–	768,–
Tool Deposit	B	32,–	16,–	48,–

Prices in EUR, valid EXW DE-46354 Südlohn, DE-38820 Halberstadt, unpacked
Freight charges valid CPT Portugal, islands and oversea territories excluded

BAUER GmbH
Eichendorffstr. 62
46354 Südlohn, Germany

Tel. +49 2862 70 90
info@bauer-suedlohn.com
www.bauer-suedlohn.com

Geschäftsführer
Patrick Bauer, Pascal Bauer
Amtsgericht Coesfeld HRB 5259

TÜVNORD
TÜV NORD CERT GmbH
DIN EN ISO 9001
tuev-nord.de

Price List 0726 en-PT
Environment / Storage

Mobile Sump Tray with Perforated Panel Type LPW	Category	Price	Freight charges	Price including freight charges
Drip Tray	B	50,–	16,–	66,–
LPW 60-1, hot-dip galvanized	B	645,–	141,–	786,–
Tool Deposit	B	32,–	16,–	48,–
Drip Tray	B	50,–	16,–	66,–
LPW 60-2, painted	B	640,–	141,–	781,–
Tool Deposit	B	32,–	16,–	48,–
Drip Tray	B	50,–	16,–	66,–
LPW 60-2, hot-dip galvanized	B	661,–	141,–	802,–
Tool Deposit	B	32,–	16,–	48,–
Drip Tray	B	50,–	16,–	66,–
LPW 60-3, painted	B	646,–	141,–	787,–
Tool Deposit	B	32,–	16,–	48,–
Drip Tray	B	50,–	16,–	66,–
LPW 60-3, hot-dip galvanized	B	667,–	141,–	808,–
Tool Deposit	B	32,–	16,–	48,–
Drip Tray	B	50,–	16,–	66,–
LPW 200-1, painted	B	822,–	225,–	1047,–
Tool Deposit	B	32,–	16,–	48,–
Drip Tray	B	50,–	16,–	66,–
LPW 200-1, hot-dip galvanized	B	856,–	225,–	1081,–
Tool Deposit	B	32,–	16,–	48,–
Drip Tray	B	50,–	16,–	66,–
LPW 200-2, painted	B	863,–	225,–	1088,–
Tool Deposit	B	32,–	16,–	48,–
Drip Tray	B	50,–	16,–	66,–
LPW 200-2, hot-dip galvanized	B	899,–	225,–	1124,–
Tool Deposit	B	32,–	16,–	48,–
Drip Tray	B	50,–	16,–	66,–
LPW 200-3, painted	B	878,–	225,–	1103,–
Tool Deposit	B	32,–	16,–	48,–
Drip Tray	B	50,–	16,–	66,–
LPW 200-3, hot-dip galvanized	B	914,–	225,–	1139,–
Tool Deposit	B	32,–	16,–	48,–
Drip Tray	B	50,–	16,–	66,–
LPW 200-4, painted	B	1055,–	225,–	1280,–
LPW 200-4, hot-dip galvanized	B	1086,–	225,–	1311,–

Modular Sump Tray Type MAW	Category	Price	Freight charges	Price including freight charges
MAW, painted	B	336,–	141,–	477,–
MAW, hot-dip galvanized	B	366,–	141,–	507,–
Element No. 1: grid grate incl. supporTS, painted	B	78,–	18,–	96,–
Element No. 2: galvanized handle + castors	B	138,–	19,–	157,–
Element No. 3: runners, painted	B	103,–	15,–	118,–
Element No. 3: runners, hot-dip galvanized	B	66,–	15,–	81,–
Element No. 6: surround, galvanized	B	601,–	141,–	742,–

Prices in EUR, valid EXW DE-46354 Südlohn, DE-38820 Halberstadt, unpacked
Freight charges valid CPT Portugal, islands and oversea territories excluded

BAUER GmbH
Eichendorffstr. 62
46354 Südlohn, Germany

Tel. +49 2862 70 90
info@bauer-suedlohn.com
www.bauer-suedlohn.com

Geschäftsführer
Patrick Bauer, Pascal Bauer
Amtsgericht Coesfeld HRB 5259

TÜVNORD
TÜV NORD CERT GmbH
DIN EN ISO 9001
tuev-nord.de

Price List 0726 en-PT
Environment / Storage

Spline Sump Type PW	Category	Price	Freight charges	Price including freight charges
PW 200-2, painted	B	245,–	141,–	386,–
PW 200-2, hot-dip galvanized	B	235,–	141,–	376,–
PW 200-4, painted	B	271,–	141,–	412,–
PW 200-4, hot-dip galvanized	B	261,–	141,–	402,–
PW 400-4, painted	B	349,–	141,–	490,–
PW 400-4, hot-dip galvanized	B	332,–	141,–	473,–

Spline Sump Type PWE	Category	Price	Freight charges	Price including freight charges
PWE 200-2, painted	B	217,–	141,–	358,–
PWE 200-2, hot-dip galvanized	B	207,–	141,–	348,–
PWE 200-4, painted	B	236,–	141,–	377,–
PWE 200-4, hot-dip galvanized	B	228,–	141,–	369,–
PWE 400-4, painted	B	288,–	141,–	429,–
PWE 400-4, hot-dip galvanized	B	278,–	141,–	419,–

Hazardous Materials Cabinet with Roller Shutter Door Type RSG	Category	Price	Freight charges	Price including freight charges
RSG-1, painted	B	1906,–	225,–	2131,–
Set of 4 Feet, height adjustable	B	80,–	9,–	89,–
RSG-2, painted	B	1920,–	225,–	2145,–
Set of 4 Feet, height adjustable	B	80,–	9,–	89,–
RSG-3, painted	B	1971,–	225,–	2196,–
Set of 4 Feet, height adjustable	B	80,–	9,–	89,–
RSG-4, painted	B	2109,–	327,–	2436,–
Set of 4 Feet, height adjustable	B	80,–	9,–	89,–

Shelf Sump with Polyethylene Inlay Type RW PE	Category	Price	Freight charges	Price including freight charges
RW 1800 PE, painted	B	1044,–	225,–	1269,–
RW 1800 PE, hot-dip galvanized	B	1100,–	225,–	1325,–
RW 2200-1 PE, painted	B	1089,–	225,–	1314,–
RW 2200-1 PE, hot-dip galvanized	B	1147,–	225,–	1372,–
RW 2200-2 PE, painted	B	1276,–	225,–	1501,–
RW 2200-2 PE, hot-dip galvanized	B	1341,–	225,–	1566,–
RW 2700-1 PE, painted	B	1108,–	278,–	1386,–
RW 2700-1 PE, hot-dip galvanized	B	1192,–	278,–	1470,–
RW 2700-2 PE, painted	B	1266,–	278,–	1544,–
RW 2700-2 PE, hot-dip galvanized	B	1365,–	278,–	1643,–
RW 2700-3 PE, painted	B	1466,–	278,–	1744,–
RW 2700-3 PE, hot-dip galvanized	B	1592,–	278,–	1870,–
RW 3300-1 PE, painted	B	1417,–	278,–	1695,–
RW 3300-1 PE, hot-dip galvanized	B	1510,–	278,–	1788,–
RW 3300-2 PE, painted	B	1535,–	278,–	1813,–
RW 3300-2 PE, hot-dip galvanized	B	1637,–	278,–	1915,–
RW 3300-3 PE, painted	B	1738,–	380,–	2118,–
RW 3300-3 PE, hot-dip galvanized	B	1850,–	380,–	2230,–

Prices in EUR, valid EXW DE-46354 Südlohn, DE-38820 Halberstadt, unpacked
Freight charges valid CPT Portugal, islands and oversea territories excluded

BAUER GmbH
Eichendorffstr. 62
46354 Südlohn, Germany

Tel. +49 2862 70 90
info@bauer-suedlohn.com
www.bauer-suedlohn.com

Geschäftsführer
Patrick Bauer, Pascal Bauer
Amtsgericht Coesfeld HRB 5259

TÜVNORD
TÜV NORD CERT GmbH
DIN EN ISO 9001
tuev-nord.de

Price List 0726 en-PT
Environment / Storage

Shelf Sump Type RW	Category	Price	Freight charges	Price including freight charges
RW 1800, painted	B	507,–	141,–	648,–
RW 1800, hot-dip galvanized	B	561,–	141,–	702,–
RW 2200-1, painted	B	519,–	141,–	660,–
RW 2200-1, hot-dip galvanized	B	577,–	141,–	718,–
RW 2200-2, painted	B	532,–	225,–	757,–
RW 2200-2, hot-dip galvanized	B	597,–	225,–	822,–
RW 2700-1, painted	B	528,–	278,–	806,–
RW 2700-1, hot-dip galvanized	B	611,–	278,–	889,–
RW 2700-2, painted	B	607,–	278,–	885,–
RW 2700-2, hot-dip galvanized	B	706,–	278,–	984,–
RW 2700-3, painted	B	657,–	278,–	935,–
RW 2700-3, hot-dip galvanized	B	781,–	278,–	1059,–
RW 3300-1, painted	B	680,–	278,–	958,–
RW 3300-1, hot-dip galvanized	B	774,–	278,–	1052,–
RW 3300-2, painted	B	748,–	278,–	1026,–
RW 3300-2, hot-dip galvanized	B	850,–	278,–	1128,–
RW 3300-3, painted	B	834,–	278,–	1112,–
RW 3300-3, hot-dip galvanized	B	945,–	278,–	1223,–

Shelf Sump with Polyethylene Inlay Type RW-GR PE	Category	Price	Freight charges	Price including freight charges
RW-GR 1800 PE, painted	B	1178,–	225,–	1403,–
RW-GR 1800 PE, hot-dip galvanized	B	1231,–	225,–	1456,–
RW-GR 2200-1 PE, painted	B	1255,–	225,–	1480,–
RW-GR 2200-1 PE, hot-dip galvanized	B	1313,–	225,–	1538,–
RW-GR 2200-2 PE, painted	B	1443,–	327,–	1770,–
RW-GR 2200-2 PE, hot-dip galvanized	B	1505,–	327,–	1832,–
RW-GR 2700-1 PE, painted	B	1313,–	380,–	1693,–
RW-GR 2700-1 PE, hot-dip galvanized	B	1395,–	380,–	1775,–
RW-GR 2700-2 PE, painted	B	1469,–	380,–	1849,–
RW-GR 2700-2 PE, hot-dip galvanized	B	1570,–	380,–	1950,–
RW-GR 2700-3 PE, painted	B	1671,–	380,–	2051,–
RW-GR 2700-3 PE, hot-dip galvanized	B	1776,–	380,–	2156,–
RW-GR 3300-1 PE, painted	B	1790,–	380,–	2170,–
RW-GR 3300-1 PE, hot-dip galvanized	B	1882,–	380,–	2262,–
RW-GR 3300-2 PE, painted	B	1906,–	380,–	2286,–
RW-GR 3300-2 PE, hot-dip galvanized	B	2018,–	380,–	2398,–
RW-GR 3300-3 PE, painted	B	2110,–	451,–	2561,–
RW-GR 3300-3 PE, hot-dip galvanized	B	2222,–	451,–	2673,–
RW-GR 3600-3 PE, painted	B	2428,–	461,–	2889,–
RW-GR 3600-3 PE, hot-dip galvanized	B	2580,–	461,–	3041,–

Shelf Sump Type RW-GR	Category	Price	Freight charges	Price including freight charges
RW-GR 1800, painted	B	641,–	225,–	866,–
RW-GR 1800, hot-dip galvanized	B	696,–	225,–	921,–
RW-GR 2200-1, painted	B	686,–	225,–	911,–

Prices in EUR, valid EXW DE-46354 Südlohn, DE-38820 Halberstadt, unpacked
Freight charges valid CPT Portugal, islands and oversea territories excluded

BAUER GmbH
Eichendorffstr. 62
46354 Südlohn, Germany

Tel. +49 2862 70 90
info@bauer-suedlohn.com
www.bauer-suedlohn.com

Geschäftsführer
Patrick Bauer, Pascal Bauer
Amtsgericht Coesfeld HRB 5259

TÜVNORD
TÜV NORD CERT GmbH
DIN EN ISO 9001
tuev-nord.de

Price List 0726 en-PT
Environment / Storage

Shelf Sump Type RW-GR	Category	Price	Freight charges	Price including freight charges
RW-GR 2200-1, hot-dip galvanized	B	745,–	225,–	970,–
RW-GR 2200-2, painted	B	700,–	327,–	1027,–
RW-GR 2200-2, hot-dip galvanized	B	761,–	327,–	1088,–
RW-GR 2700-1, painted	B	732,–	278,–	1010,–
RW-GR 2700-1, hot-dip galvanized	B	815,–	380,–	1195,–
RW-GR 2700-2, painted	B	811,–	380,–	1191,–
RW-GR 2700-2, hot-dip galvanized	B	911,–	380,–	1291,–
RW-GR 2700-3, painted	B	861,–	380,–	1241,–
RW-GR 2700-3, hot-dip galvanized	B	966,–	380,–	1346,–
RW-GR 3300-1, painted	B	1052,–	380,–	1432,–
RW-GR 3300-1, hot-dip galvanized	B	1146,–	380,–	1526,–
RW-GR 3300-2, painted	B	1119,–	380,–	1499,–
RW-GR 3300-2, hot-dip galvanized	B	1230,–	380,–	1610,–
RW-GR 3300-3, painted	B	1206,–	380,–	1586,–
RW-GR 3300-3, hot-dip galvanized	B	1317,–	380,–	1697,–
RW-GR 3600-3, painted	B	1330,–	380,–	1710,–
RW-GR 3600-3, hot-dip galvanized	B	1483,–	380,–	1863,–

Safety Cabinet Type SIW	Category	Price	Freight charges	Price including freight charges
SIW 1005	B	596,–	141,–	737,–
SIW 2005	B	751,–	225,–	976,–

Diesel Filling Point Type TAW	Category	Price	Freight charges	Price including freight charges
TAW 1, painted	B	2448,–	on request	on request
TAW 2, painted	B	3195,–	on request	on request
TAW 3, painted	B	4603,–	on request	on request

Environmental Shelve Type UR	Category	Price	Freight charges	Price including freight charges
UR-G 2200, painted	B	1827,–	382,–	2209,–
Grid Set, hot-dip galvanized	B	198,–	141,–	339,–
Crash Guard	B	75,–	9,–	84,–
UR-G 2700, painted	B	1968,–	382,–	2350,–
Grid Set, hot-dip galvanized	B	245,–	141,–	386,–
Crash Guard	B	75,–	9,–	84,–
UR-G 3300, painted	B	2749,–	451,–	3200,–
Grid Set, hot-dip galvanized	B	297,–	141,–	438,–
Crash Guard	B	75,–	9,–	84,–
UR-A 2200, painted	B	1395,–	382,–	1777,–
Grid Set, hot-dip galvanized	B	198,–	141,–	339,–
Crash Guard	B	75,–	9,–	84,–
UR-A 2700, painted	B	1535,–	382,–	1917,–
Grid Set, hot-dip galvanized	B	245,–	141,–	386,–
Crash Guard	B	75,–	9,–	84,–
UR-A 3300, painted	B	2317,–	451,–	2768,–
Grid Set, hot-dip galvanized	B	297,–	141,–	438,–

Prices in EUR, valid EXW DE-46354 Südlohn, DE-38820 Halberstadt, unpacked
Freight charges valid CPT Portugal, islands and oversea territories excluded

BAUER GmbH
Eichendorffstr. 62
46354 Südlohn, Germany

Tel. +49 2862 70 90
info@bauer-suedlohn.com
www.bauer-suedlohn.com

Geschäftsführer
Patrick Bauer, Pascal Bauer
Amtsgericht Coesfeld HRB 5259

TÜVNORD
TÜV NORD CERT GmbH
DIN EN ISO 9001
tuev-nord.de

Price List 0726 en-PT
Environment / Storage

Environmental Shelve Type UR	Category	Price	Freight charges	Price including freight charges
Crash Guard	B	75,–	9,–	84,–

Stainless Steel Sump Tray Type VAW	Category	Price	Freight charges	Price including freight charges
VAW-1, stainless steel 1.4571	B	990,–	141,–	1131,–
Grid, stainless steel 1.4571	B	494,–	14,–	508,–
Grid, hot-dip galvanized	B	71,–	14,–	85,–
VAW-2, stainless steel 1.4571	B	1079,–	141,–	1220,–
Grid, stainless steel 1.4571	B	731,–	16,–	747,–
Grid, hot-dip galvanized	B	95,–	38,–	133,–
VAW-4/A, stainless steel 1.4571	B	1236,–	141,–	1377,–
Grid, stainless steel 1.4571	B	1061,–	22,–	1083,–
Grid, hot-dip galvanized	B	124,–	22,–	146,–
VAW-4/B, stainless steel 1.4571	B	1511,–	141,–	1652,–
Grid, stainless steel 1.4571	B	1461,–	27,–	1488,–
Grid, hot-dip galvanized	B	169,–	27,–	196,–
VAW 1000 (Stainless Steel Grid), stainless steel 1.4571	B	3909,–	253,–	4162,–
VAW 1000 (Hot-dip Galvanized Grid), stainless steel 1.4571	B	2868,–	253,–	3121,–
VAW 1000-2 (Stainless Steel Grid), stainless steel 1.4571	B	5472,–	419,–	5891,–
VAW 1000-2 (Hot-dip Galvanized Grid), stainless steel 1.4571	B	3561,–	419,–	3980,–

Heating Chamber Type WK	Category	Price	Freight charges	Price including freight charges
WK 29-2 E65, painted	C	30688,–	on request	on request
WK 29-2 E85, painted	C	30859,–	on request	on request
WK 57-2 E65, painted	C	43080,–	on request	on request
WK 57-2 E85, painted	C	45540,–	on request	on request

Sump Tray Type WM	Category	Price	Freight charges	Price including freight charges
WM-2/200, hot-dip galvanized	B	290,–	141,–	431,–
Drum Support FA 60-1, hot-dip galvanized	B	109,–	15,–	124,–
Drum Support FA 60-2, hot-dip galvanized	B	118,–	18,–	136,–
Drum Support FA 60-3, hot-dip galvanized	B	138,–	21,–	159,–
Drum Support FA 200-1, hot-dip galvanized	B	118,–	15,–	133,–
Can Shelf Type GR-A, galvanized	B	138,–	60,–	198,–
Can Shelf Type GR-B, galvanized	B	138,–	60,–	198,–
Can Shelf Type GR-C, galvanized	B	138,–	60,–	198,–
WM-4/200, hot-dip galvanized	B	330,–	141,–	471,–
Drum Support FA 60-1, hot-dip galvanized	B	109,–	15,–	124,–
Drum Support FA 60-2, hot-dip galvanized	B	118,–	18,–	136,–
Drum Support FA 60-3, hot-dip galvanized	B	138,–	21,–	159,–
Drum Support FA 200-1, hot-dip galvanized	B	118,–	15,–	133,–
Drum Support FA 200-2, hot-dip galvanized	B	138,–	22,–	160,–
Can Shelf Type GR-A, galvanized	B	138,–	60,–	198,–
Can Shelf Type GR-B, galvanized	B	138,–	60,–	198,–
Can Shelf Type GR-C, galvanized	B	138,–	60,–	198,–
WM-4/400, hot-dip galvanized	B	396,–	225,–	621,–

Prices in EUR, valid EXW DE-46354 Südlohn, DE-38820 Halberstadt, unpacked
Freight charges valid CPT Portugal, islands and oversea territories excluded

BAUER GmbH
Eichendorffstr. 62
46354 Südlohn, Germany

Tel. +49 2862 70 90
info@bauer-suedlohn.com
www.bauer-suedlohn.com

Geschäftsführer
Patrick Bauer, Pascal Bauer
Amtsgericht Coesfeld HRB 5259

TÜVNORD
TÜV NORD CERT GmbH
DIN EN ISO 9001
tuev-nord.de

Price List 0726 en-PT
Environment / Storage

Sump Tray Type WO	Category	Price	Freight charges	Price including freight charges
WO-2/200, hot-dip galvanized	B	221,–	141,–	362,–
WO-4/200, hot-dip galvanized	B	240,–	141,–	381,–
WO-4/400, hot-dip galvanized	B	309,–	141,–	450,–

Polyethylene Sump Pallet Type WP	Category	Price	Freight charges	Price including freight charges
WP 1/11, made of robust polyethylene	B	1089,–	141,–	1230,–
WP 2/11, made of robust polyethylene	B	1377,–	141,–	1518,–
Dispensing Tray VB 2, robust polyethylene, blue	B	158,–	60,–	218,–

Polyethylene Sump Pallet Type WPA-PE	Category	Price	Freight charges	Price including freight charges
WPA-PE 2/2, made of robust polyethylene	B	324,–	141,–	465,–
WPA-PE 4/2, made of robust polyethylene	B	512,–	141,–	653,–

Polyethylene Sump Pallet Type WP-PE	Category	Price	Freight charges	Price including freight charges
WP-PE 1/11, made of robust polyethylene	B	1179,–	141,–	1320,–
Dispensing Tray VB 1, robust polyethylene, blue	B	169,–	60,–	229,–
WP-PE 2/11, made of robust polyethylene	B	1560,–	278,–	1838,–
Dispensing Tray VB 2, robust polyethylene, blue	B	158,–	60,–	218,–
WP-PE 2/2, made of robust polyethylene	B	301,–	141,–	442,–
WP-PE 4/2, made of robust polyethylene	B	469,–	141,–	610,–
WP-PE 4/4, made of robust polyethylene	B	487,–	141,–	628,–
WP-PE 8/11, made of robust polyethylene	B	1560,–	278,–	1838,–

Mobile Polyethylene Sump Tray Type WPT	Category	Price	Freight charges	Price including freight charges
WPT 230, made of robust polyethylene	B	538,–	141,–	679,–

Prices in EUR, valid EXW DE-46354 Südlohn, DE-38820 Halberstadt, unpacked
Freight charges valid CPT Portugal, islands and oversea territories excluded

BAUER GmbH
Eichendorffstr. 62
46354 Südlohn, Germany

Tel. +49 2862 70 90
info@bauer-suedlohn.com
www.bauer-suedlohn.com

Geschäftsführer
Patrick Bauer, Pascal Bauer
Amtsgericht Coesfeld HRB 5259

TÜVNORD
TÜV NORD CERT GmbH
DIN EN ISO 9001
tuev-nord.de

Price List 0726 en-PT
Hazardous Materials Containers

Fluorescent Tube Box Type AL-D	Category	Price	Freight charges	Price including freight charges
AL-D 150, aluminium	C	518,–	141,–	659,–
AL-D 200, aluminium	C	571,–	141,–	712,–

Collecting Container Type ASB	Category	Price	Freight charges	Price including freight charges
ASB 250, hot-dip galvanized	C	2038,–	327,–	2365,–
ASB 450-I, hot-dip galvanized	C	2155,–	327,–	2482,–

Special Waste Container Type ASK	Category	Price	Freight charges	Price including freight charges
ASK 540-4, hot-dip galvanized	C	on request	on request	on request

Duo-Container Type DC	Category	Price	Freight charges	Price including freight charges
DC 450, hot-dip galvanized	C	2347,–	on request	on request
Stainless steel strainer	D	118,–	9,–	127,–
Wing nut spanner for M12, hot-dip galvanized	F	35,–	15,–	50,–
DC 1000, hot-dip galvanized	C	2493,–	on request	on request
Stainless steel strainer	D	118,–	9,–	127,–
Wing nut spanner for M12, hot-dip galvanized	F	35,–	15,–	50,–

Lithium-Ion Storage Container Type LIL	Category	Price	Freight charges	Price including freight charges
LIL 30, hot-dip galvanized	B	1937,–	141,–	2078,–
LIL 90, hot-dip galvanized	B	2816,–	225,–	3041,–
Castor Set, polyamide, Load capacity 1050 kg / castor set	A	156,–	15,–	171,–
LIL 220, hot-dip galvanized	B	4864,–	327,–	5191,–
Castor Set, polyamide, Load capacity 1050 kg / castor set	A	156,–	15,–	171,–
LIL 280, hot-dip galvanized	B	5884,–	327,–	6211,–
Castor Set, polyamide, Load capacity 1050 kg / castor set	A	156,–	15,–	171,–
LIL 340, hot-dip galvanized	B	6792,–	327,–	7119,–
Castor Set, polyamide, Load capacity 1050 kg / castor set	A	156,–	15,–	171,–

MobiCont Type M 800	Category	Price	Freight charges	Price including freight charges
M 800, painted	C	1389,–	327,–	1716,–
Level Indicator	C	220,–	9,–	229,–
Funnel for filling, PP	D	68,–	9,–	77,–
Filling/Extraction lid	C	68,–	9,–	77,–
Lid, galvanized, without a lock	C	195,–	15,–	210,–
Lid, galvanized, with square lock	C	242,–	18,–	260,–
Lid, galvanized, with cylinder lock	C	242,–	18,–	260,–
Castor Set, polyamide, Load capacity 1350 kg / castor set	A	192,–	15,–	207,–
Hand Pump K 10 C, connects to drum thread, suitable for fuels and heating fuel	C	95,–	14,–	109,–
Hose Kit (1.5 m) for Hand Pump Type K 10 C, suitable for diesel and fuel	C	68,–	14,–	82,–
Hose Kit (3 m) for Hand Pump Type K 10 C, suitable for diesel and fuel	C	96,–	15,–	111,–

Prices in EUR, valid EXW DE-46354 Südlohn, DE-38820 Halberstadt, unpacked
Freight charges valid CPT Portugal, islands and oversea territories excluded

BAUER GmbH
Eichendorffstr. 62
46354 Südlohn, Germany

Tel. +49 2862 70 90
info@bauer-suedlohn.com
www.bauer-suedlohn.com

Geschäftsführer
Patrick Bauer, Pascal Bauer
Amtsgericht Coesfeld HRB 5259

TÜVNORD
TÜV NORD CERT GmbH
DIN EN ISO 9001
tuev-nord.de

Price List 0726 en-PT
Hazardous Materials Containers

MobiCont Type M 800	Category	Price	Freight charges	Price including freight charges
Hose Kit (4 m) for Hand Pump Type K 10 C, suitable for diesel and fuel	C	109,–	15,–	124,–
Electric Pump TecPump 400 DC 12V	C	510,–	15,–	525,–
Electric Pump TecPump 400 DC 24V	C	510,–	15,–	525,–
Electric Pump TecPump 600 AC 230V	C	510,–	15,–	525,–
M 800, hot-dip galvanized	C	1483,–	327,–	1810,–
Level Indicator	C	220,–	9,–	229,–
Funnel for filling, PP	D	68,–	9,–	77,–
Filling/Extraction lid	C	68,–	9,–	77,–
Lid, galvanized, without a lock	C	195,–	15,–	210,–
Lid, galvanized, with square lock	C	242,–	18,–	260,–
Lid, galvanized, with cylinder lock	C	242,–	18,–	260,–
Castor Set, polyamide, Load capacity 1350 kg / castor set	A	192,–	15,–	207,–
Hand Pump K 10 C, connects to drum thread, suitable for fuels and heating fuel	C	95,–	14,–	109,–
Hose Kit (1.5 m) for Hand Pump Type K 10 C, suitable for diesel and fuel	C	68,–	14,–	82,–
Hose Kit (3 m) for Hand Pump Type K 10 C, suitable for diesel and fuel	C	96,–	15,–	111,–
Hose Kit (4 m) for Hand Pump Type K 10 C, suitable for diesel and fuel	C	109,–	15,–	124,–
Electric Pump TecPump 400 DC 12V	C	510,–	15,–	525,–
Electric Pump TecPump 400 DC 24V	C	510,–	15,–	525,–
Electric Pump TecPump 600 AC 230V	C	510,–	15,–	525,–

MobiCont Type MD	Category	Price	Freight charges	Price including freight charges
MD 800, painted	C	1934,–	327,–	2261,–
Level Indicator	C	220,–	9,–	229,–
Hand Pump K 10 C, connects to drum thread, suitable for fuels and heating fuel	C	95,–	14,–	109,–
Hose Kit (1.5 m) for Hand Pump Type K 10 C, suitable for diesel and fuel	C	68,–	14,–	82,–
Hose Kit (3 m) for Hand Pump Type K 10 C, suitable for diesel and fuel	C	96,–	15,–	111,–
Hose Kit (4 m) for Hand Pump Type K 10 C, suitable for diesel and fuel	C	109,–	15,–	124,–
Electric Pump TecPump 400 DC 12V	C	510,–	15,–	525,–
Electric Pump TecPump 400 DC 24V	C	510,–	15,–	525,–
Electric Pump TecPump 600 AC 230V	C	510,–	15,–	525,–
MD 800, hot-dip galvanized	C	2025,–	327,–	2352,–
Level Indicator	C	220,–	9,–	229,–
Hand Pump K 10 C, connects to drum thread, suitable for fuels and heating fuel	C	95,–	14,–	109,–
Hose Kit (1.5 m) for Hand Pump Type K 10 C, suitable for diesel and fuel	C	68,–	14,–	82,–
Hose Kit (3 m) for Hand Pump Type K 10 C, suitable for diesel and fuel	C	96,–	15,–	111,–
Hose Kit (4 m) for Hand Pump Type K 10 C, suitable for diesel and fuel	C	109,–	15,–	124,–
Electric Pump TecPump 400 DC 12V	C	510,–	15,–	525,–
Electric Pump TecPump 400 DC 24V	C	510,–	15,–	525,–
Electric Pump TecPump 600 AC 230V	C	510,–	15,–	525,–

MobiCont Type MO	Category	Price	Freight charges	Price including freight charges
MO 800, painted	C	on request	on request	on request
Level Indicator	C	220,–	9,–	229,–
MO 800, hot-dip galvanized	C	on request	on request	on request
Level Indicator	C	220,–	9,–	229,–

Prices in EUR, valid EXW DE-46354 Südlohn, DE-38820 Halberstadt, unpacked
Freight charges valid CPT Portugal, islands and oversea territories excluded

BAUER GmbH
Eichendorffstr. 62
46354 Südlohn, Germany

Tel. +49 2862 70 90
info@bauer-suedlohn.com
www.bauer-suedlohn.com

Geschäftsführer
Patrick Bauer, Pascal Bauer
Amtsgericht Coesfeld HRB 5259

TÜVNORD
TÜV NORD CERT GmbH
DIN EN ISO 9001
tuev-nord.de

Price List 0726 en-PT
Hazardous Materials Containers

Fuel Container Type MT	Category	Price	Freight charges	Price including freight charges
MT 450, hot-dip galvanized	C	2223,–	327,–	2550,–
Level Indicator	C	220,–	9,–	229,–
Hand Pump K 10 C, connects to drum thread, suitable for fuels and heating fuel	C	95,–	14,–	109,–
Digital Flow Counter FMT 3 with screwed joints	C	320,–	9,–	329,–
Electric Pump TecPump 400 DC 12V	C	510,–	12,–	522,–
Electric Pump TecPump 400 DC 24V	C	510,–	12,–	522,–
Electric Pump TecPump 600 AC 230V	C	510,–	12,–	522,–
Counter Z 400, Retrofit Kit for Electric Pumps TecPump 400 DC 12V, 400 DC 24V and 600 AC 230V	C	159,–	9,–	168,–
MT 600, hot-dip galvanized	C	2644,–	327,–	2971,–
Level Indicator	C	220,–	9,–	229,–
Hand Pump K 10 C, connects to drum thread, suitable for fuels and heating fuel	C	95,–	14,–	109,–
Digital Flow Counter FMT 3 with screwed joints	C	320,–	9,–	329,–
Electric Pump TecPump 400 DC 12V	C	510,–	12,–	522,–
Electric Pump TecPump 400 DC 24V	C	510,–	12,–	522,–
Electric Pump TecPump 600 AC 230V	C	510,–	12,–	522,–
Counter Z 400, Retrofit Kit for Electric Pumps TecPump 400 DC 12V, 400 DC 24V and 600 AC 230V	C	159,–	9,–	168,–
MT 1000, hot-dip galvanized	C	2858,–	398,–	3256,–
Level Indicator	C	220,–	9,–	229,–
Hand Pump K 10 C, connects to drum thread, suitable for fuels and heating fuel	C	95,–	14,–	109,–
Digital Flow Counter FMT 3 with screwed joints	C	320,–	9,–	329,–
Electric Pump TecPump 400 DC 12V	C	510,–	12,–	522,–
Electric Pump TecPump 400 DC 24V	C	510,–	12,–	522,–
Electric Pump TecPump 600 AC 230V	C	510,–	12,–	522,–
Counter Z 400, Retrofit Kit for Electric Pumps TecPump 400 DC 12V, 400 DC 24V and 600 AC 230V	C	159,–	9,–	168,–

MobiCont Type MW	Category	Price	Freight charges	Price including freight charges
MW 800, painted	C	1783,–	327,–	2110,–
Level Indicator	C	220,–	9,–	229,–
Filling coupling	C	53,–	8,–	61,–
Tank heating, 220 W	C	384,–	12,–	396,–
Tank fitting	B	67,–	9,–	76,–
Anti-siphon valve	D	71,–	8,–	79,–
Aeration/Vent valve	C	27,–	8,–	35,–
MW 800, hot-dip galvanized	C	1877,–	327,–	2204,–
Level Indicator	C	220,–	9,–	229,–
Filling coupling	C	53,–	8,–	61,–
Tank heating, 220 W	C	384,–	12,–	396,–
Tank fitting	B	67,–	9,–	76,–
Anti-siphon valve	D	71,–	8,–	79,–
Aeration/Vent valve	C	27,–	8,–	35,–

Special Waste Container Type SAF	Category	Price	Freight charges	Price including freight charges
SAF 450, hot-dip galvanized	C	1136,–	on request	on request
SAF 600, hot-dip galvanized	C	1136,–	on request	on request
SAF 1000, hot-dip galvanized	C	1136,–	on request	on request

Prices in EUR, valid EXW DE-46354 Südlohn, DE-38820 Halberstadt, unpacked
Freight charges valid CPT Portugal, islands and oversea territories excluded

BAUER GmbH
Eichendorffstr. 62
46354 Südlohn, Germany

Tel. +49 2862 70 90
info@bauer-suedlohn.com
www.bauer-suedlohn.com

Geschäftsführer
Patrick Bauer, Pascal Bauer
Amtsgericht Coesfeld HRB 5259

TÜVNORD
TÜV NORD CERT GmbH
DIN EN ISO 9001
tuev-nord.de

Price List 0726 en-PT
Hazardous Materials Containers

Large Salvage Packaging Type SAG	Category	Price	Freight charges	Price including freight charges
SAG 800, hot-dip galvanized	C	1141,–	327,–	1468,–
SAG 1500, hot-dip galvanized	C	2151,–	on request	on request
Polyethylene sacks, 25 pieces on roll	C	187,–	41,–	228,–
SAG 2100, hot-dip galvanized	C	2257,–	on request	on request
Polyethylene sacks, 25 pieces on roll	C	187,–	41,–	228,–
SAG 2700, hot-dip galvanized	C	2331,–	on request	on request
Polyethylene sacks, 25 pieces on roll	C	187,–	41,–	228,–

Special Waste Container Type SAP	Category	Price	Freight charges	Price including freight charges
SAP 450, hot-dip galvanized	C	953,–	on request	on request
Polyethylene sacks, 50 pieces on roll - 0,085 mm	C	139,–	62,–	201,–
Polyethylene sacks, 50 pieces on roll - 0,16 mm	C	246,–	141,–	387,–
SAP 600, hot-dip galvanized	C	953,–	on request	on request
Polyethylene sacks, 50 pieces on roll - 0,085 mm	C	139,–	62,–	201,–
Polyethylene sacks, 50 pieces on roll - 0,16 mm	C	246,–	141,–	387,–
SAP 800, hot-dip galvanized	C	953,–	on request	on request
Polyethylene sacks, 50 pieces on roll - 0,085 mm	C	139,–	62,–	201,–
Polyethylene sacks, 50 pieces on roll - 0,16 mm	C	246,–	141,–	387,–

Special Waste Container Type SAP-1	Category	Price	Freight charges	Price including freight charges
SAP 450-1, hot-dip galvanized	C	891,–	on request	on request
Polyethylene sacks, 50 pieces on roll - 0,085 mm	C	139,–	62,–	201,–
Polyethylene sacks, 50 pieces on roll - 0,16 mm	C	246,–	141,–	387,–
SAP 600-1, hot-dip galvanized	C	891,–	on request	on request
Polyethylene sacks, 50 pieces on roll - 0,085 mm	C	139,–	62,–	201,–
Polyethylene sacks, 50 pieces on roll - 0,16 mm	C	246,–	141,–	387,–
SAP 800-1, hot-dip galvanized	C	891,–	on request	on request
Polyethylene sacks, 50 pieces on roll - 0,085 mm	C	139,–	62,–	201,–
Polyethylene sacks, 50 pieces on roll - 0,16 mm	C	246,–	141,–	387,–
SAP 800-3, hot-dip galvanized	C	874,–	on request	on request
Polyethylene sacks, 50 pieces on roll - 0,085 mm	C	139,–	62,–	201,–
Polyethylene sacks, 50 pieces on roll - 0,16 mm	C	246,–	141,–	387,–

Used Battery Container Type SAP 600 K	Category	Price	Freight charges	Price including freight charges
SAP 600 K, hot-dip galvanized	C	1286,–	on request	on request

Used Battery Container Type SAP 601 K	Category	Price	Freight charges	Price including freight charges
SAP 601 K, hot-dip galvanized	C	1141,–	on request	on request

Special Waste Container Type SAS	Category	Price	Freight charges	Price including freight charges
SAS 800, hot-dip galvanized	C	963,–	on request	on request

Hazardous Materials Container Type SF	Category	Price	Freight charges	Price including freight charges
SF 240, hot-dip galvanized	C	on request	on request	on request

Prices in EUR, valid EXW DE-46354 Südlohn, DE-38820 Halberstadt, unpacked
Freight charges valid CPT Portugal, islands and oversea territories excluded

BAUER GmbH
Eichendorffstr. 62
46354 Südlohn, Germany

Tel. +49 2862 70 90
info@bauer-suedlohn.com
www.bauer-suedlohn.com

Geschäftsführer
Patrick Bauer, Pascal Bauer
Amtsgericht Coesfeld HRB 5259

TÜVNORD
TÜV NORD CERT GmbH
DIN EN ISO 9001
tuev-nord.de

Price List 0726 en-PT
Hazardous Materials Containers

Fluorescent Tube Box Type SL	Category	Price	Freight charges	Price including freight charges
SL 150, painted	C	688,–	225,–	913,–
SL 150, hot-dip galvanized	C	822,–	225,–	1047,–
SL 200, painted	C	766,–	225,–	991,–
SL 200, hot-dip galvanized	C	902,–	327,–	1229,–

Fluorescent Tube Box Type SL-D	Category	Price	Freight charges	Price including freight charges
SL-D 150, painted	C	757,–	225,–	982,–
Removable Tray, galvanized	C	87,–	10,–	97,–
SL-D 150, hot-dip galvanized	C	880,–	225,–	1105,–
Removable Tray, galvanized	C	87,–	10,–	97,–
SL-D 200, painted	C	837,–	225,–	1062,–
Removable Tray, galvanized	C	87,–	10,–	97,–
SL-D 200, hot-dip galvanized	C	973,–	225,–	1198,–
Removable Tray, galvanized	C	87,–	10,–	97,–

Fluorescent Tube Box Type SL-N	Category	Price	Freight charges	Price including freight charges
SL-N 220, painted	C	861,–	225,–	1086,–
SL-N 220, hot-dip galvanized	C	1003,–	225,–	1228,–

Special Waste Container Type SP	Category	Price	Freight charges	Price including freight charges
SP 100, hot-dip galvanized	C	on request	on request	on request
SP 240, hot-dip galvanized	C	on request	on request	on request

Transport Box for Aerosol Cans Type STB	Category	Price	Freight charges	Price including freight charges
STB 1000, hot-dip galvanized	C	1158,–	on request	on request
Polyethylene sacks, 50 pieces on roll	C	192,–	62,–	254,–
Absorbent felt, 100 pieces	C	366,–	60,–	426,–

Prices in EUR, valid EXW DE-46354 Südlohn, DE-38820 Halberstadt, unpacked
Freight charges valid CPT Portugal, islands and oversea territories excluded

BAUER GmbH
Eichendorffstr. 62
46354 Südlohn, Germany

Tel. +49 2862 70 90
info@bauer-suedlohn.com
www.bauer-suedlohn.com

Geschäftsführer
Patrick Bauer, Pascal Bauer
Amtsgericht Coesfeld HRB 5259

TÜVNORD
TÜV NORD CERT GmbH
DIN EN ISO 9001
tuev-nord.de